TEST REPORT

TEST OF A HYBRID WOOD STOVE FOR EMISSIONS AND EFFICIENCY

PER EPA METHODS 28R AND ASTM E2515 and ASTM E2780, MAY 2015

Client:
Hearthstone
317 Stafford ave.
Morrisville, Vt 05661

Model name: Green Mountain 40 model 8640; Craftsbury 2 model 8392, Hipster 14 AMB8240

Attention: Rafaël Sanchez

TESTED BY:

Services Polytests Inc.
695-B Gaudette
St-jean-sur-Richelieu, QC, J3B 7S7

TEST DATES: March 18th to 26th 2019
REPORT DATE: April 2nd 2019
Revision 1: November 24th 2020
Rev2: January 20th 2021
Rev3: July 26th 2022
Rev4: November 2nd 2023
Rev5: April 22nd 2024
Project number: PI-20189

All services undertaken are subject to the following general policy: Reports are submitted for exclusive use of the clients to whom they are addressed. This document may not be reproduced except in its entirety without the written permission from Services Polytests Services Polytests have not been involved in any R&D design consulting regarding this unit as requested by the NSPS.

Tested: written by:

Maxime Martin Danick Power, P. Eng

Verified by third party certifier (PFS):

SUMMARY

1 Introduction 5
1.1 General 5
1.2 Test unit information 5
1.3 Results 6
1.4 Pretest information 6
2 Summary of test results 6
2.1 Emissions 6
2.2 Average calculation 6
2.3 Test facility conditions 7
2.4 Fuel qualities 8
2.5 Dilution tunnel flow rate measurements and sampling data (ASTM E2515) 8
2.6 Dilution tunnel dual train precision 9
2.7 General summary of results 9
3 Process description 10
3.1 Discussion 10
3.2 Unit dimensions 10
3.3 Air supply system 11
3.4 operation during test 12
3.5 Start-up operation 13
3.6 Sampling locations 13
3.7 Drawings 13
3.8 Emissions efficiency testing equipment list 13
4 Sampling methods 13
4.1 Particulate sampling 13
5 Quality assurance 14
5.1 Instrument calibration 14
5.1.1 Gas meters 14
5.1.2 SCALES 14
5.1.3 Gas analyzers 14
5.2 Test method procedures 14
5.2.1 Leak check procedures 14
5.2.2 Tunnel velocity flow measurement 14
5.2.3 Pm sampling proportionality (ASTM E2515) 14

List of Revision:

Revision 1 (November 24th 2020):

- NCBI Report added Appendix 12: Volume Calculation
- CBI & NCBI Report added Appendix 13: operating instruction
- The section 3.4 p.13 updated for runs Anomalies, Validity and appropriateness detail.
- The section 3.4 p.13 updated to address the negative back filter weight.
- Updated Section 1.4 p.6 conditioning was done at medium hate draw.
- Appendix 9 updated for more detailed fuel load
- NCBI report updated to include Appendix 4 Pre-burn Data

Revision 2 (January 20th 2021):

- appendix 1 molecular weight updated to 29 for all runs
- Updated names on report to match the EPA certificate, WHA and Coc

Revision 3 (July 26th 2022):

- Conditioning preburn updated appendix 4
- appendix 6 updated to include temperature sensor location
- Section 3.6 p.13 updated to match Appendix 8 dimensions.
- The section 3.4 p.13 updated to address the negative back filter weight.
- Table 2.6 updated to include deviation in g/kg
- Appendix 1 updated calculation of wood density.

Revision 4 (November 2nd 2023):

- Appendix 12: Volume Calculation, updated for with more details
- Appendix 4 preburn data updated to include letter for fuel moisture.
- Table 2.1 Updated to include CSAB415.1-10 Results.
- Appendix 8 updated for more dilution tunnel description
- Appendix 6 first page temperature probe location into NCBI Report.
- Section 3.4 run 1, 4 & 6 additional comments about minimum burn rate.
- Appendix 3 Calibration certificate updated to include an English list of equipment with calibration due date.
- Appendix 1 updated to include negative filter weight rounded to zero demonstration.

Revision 5 (April 22nd 2024):

- Appendix 1: updated to include all CSA B415.1-10 data for efficiency calculation
- Foot note table 2.1 for uncorrected data

List of appendixes

APPENDIX 1: Raw data, forms and results

APPENDIX 2: Proportionality results

APPENDIX 3: Calibration data

APPENDIX 4: Unit pre burn

APPENDIX 5: Participants

APPENDIX 6: Drawings and specifications

APPENDIX 7: Operator's manual

APPENDIX 8: Photographs of test set up

APPENDIX 9: Test load photographs

APPENDIX 10: Laboratory Operating Procedures

APPENDIX 11: Sample calculations

APPENDIX 12: Volume calculations

APPENDIX 13: Operating instruction

APPENDIX 14: Drawing Air flow pattern

APPENDIX 15: WHA, COC, 30 days notice, others

1 INTRODUCTION

1.1 GENERAL

Laboratory

- Location: Services Polytests Inc., 695-B Gaudette St-jean-sur-Richelieu QC, Canada J3B 7S7
- Elevation: 100 feet above sea level

Test program Purpose:

1) Unit qualification NSPS 2020, Certify the use of a catalyst supplied by a second source, "Advanced Catalyst Systems" Hearthstone's intent is to have this supplier be a second source, in addition to the current supplier, "Applied Ceramics" with the catalysts to be used interchangeably in the stove.

2) Stove model Green Mountain40 have been tested in May 2017 (PI-20149) certificate number: 93-17. In addition to the catalyst equivalency test, manufacturer want to re-certify with a new weighted average. The original stove (may 2017) had a restrictor that was added to the air inlet, but we were receiving complaints that the stove was too slow to get going. The restrictor plate was left out of the unit for this series of tests.

3) In addition, the manufacturer wishes to certify a rear exit version of the stove, which is called the "Craftsbury 2", model# 8392. The stove has the same firebox size / construction, the only difference being the rear exit option and revised external casting look.

- Test dates: March 18th to 26th 2019
- Test methods used:
  - Particulate emissions: ASTM E2780-10; ASTM E2515-11 methods 28R as referred into 40 CFR Part 60 Subpart AAA
  - Efficiency: CSA B415.1-10

1.2 TEST UNIT INFORMATION

General

- Manufacturer: Hearthstone
- Product type: Hybrid wood stove
- Combustion system: catalytic, with pre-combustion
- Unit tested: Craftsbury Model 8392
- Option: optional convection fan can be installed on the wood stove
- Similar Model: Green Mountain 40 8640, Hipster 14 AMB 8240
- In summary: rear-exit version of the stove, named the "Craftsbury 2" (model# 8392) This rear-exit version has identical K-list firebox components, dimensions, and construction, the differences being a rear-exit option and revised cosmetics to the external shell. The "Hipster 14" (Model 8240) has identical K-list firebox components, dimensions, and construction, the difference being revised cosmetics. Refer Appendix 6 for all details.

1.3 RESULTS

Emission results obtained

- Average emission rate: 1.07 grams/hour
- Average Efficiency: 79.0%

Conformity: NSPS Phase 2020, CSA B415.1-22

1.4 PRETEST INFORMATION

Unit condition: The unit was received by carrier first week of May 2017. The 50hrs of aging is made by the manufacturer at medium heat draw (all data in Appendix 4).

Set up

- Venting system type: 6-inch diameter insulated chimney
- System height from floor: 15 feet
- Particularities: The unit was tested with the convection Fan ON for average numbers (Test #1,2,3,4 and 6), and one confirmation test is done without any convection fan (test #5).

Break in period

- Duration: the unit was pre burned by the manufacturer and run for at least 50 hours, adequate documentation of fuel additions, flue and unit temperatures recorded.
- Fuel: BC FIR between 19% and 25%

2 SUMMARY OF TEST RESULTS

2.1 EMISSIONS

Run Number	Test Date (AAA-MM-DD)	Emission Rate (g/hr)	Burn Rate (kg/hr)	1st hour emission Rate (g/hr)	CSA B415.1 CO emission g/hr	CSA B415.1 emission g/Mj	Heat output (BTU/HR)	(OHE) % HHV
1	2019-03-18	0,45	1,029	1,39	29,14	0,027	15 640	80,8
2	2019-03-19	1,67	1,773	3,11	8,56	0,062	25 443	76,5
3	2019-03-20	2,78	2,269	4,09	60,10	0,083	31 581	73,6
4	2019-03-21	0,61	1,167	1,27	16,33	0,032	17 805	80,9
5	2019-03-25	0,41	1,077	1,30	44,02	0,024	15 764	77,9
6	2019-03-26	0,69	0,920	1,82	40,67	0,047	13 876	80,2

-NEGATIVE FILTER WEIGHTS UNCORRECTED DATA IS THE DATA USED FOR PARTICULATE MATTER EMISSION RATE CALCULATIONS COMPLIANCE

2.2 AVERAGE CALCULATION

Test No.	Burn Rate (Kg/hr)	(E) Ave. Emission Rate g/hr	(OHE) %	Heat Output (BTU/HR)	CSA B415.1 CO emission g/min
1	1,029	0,45	80,8	15 640	0,486
2	1,773	1,67	76,5	25 443	0,143
3	2,269	2,78	73,6	31 581	1,00
4	1,167	0,61	80,9	17 805	0,272
6	0,920	0,69	80,2	13 876	0,677
Weighted particulate emission average of 4 test runs: 1.07 grams per hour.					
Weighted average HHV efficiency of 4 test runs: 79.0%.					
Average Co 0.52 gr/min					

2.3 TEST FACILITY CONDITIONS

Run Number	Room Temperature		Barometric pressure		Relative humidity		Air Velocity	
	Before (F)	After (F)	Before (in.Hg)	After (in.Hg)	Before (%)	After (%)	Before (ft/min)	After (ft/min)
1	68	71	30,150	30,062	20,8	20,1	0	0
2	69	70	30,327	30,327	18,1	18,4	0	0
3	69	74	30,268	30,268	19,7	23,5	0	0
4	69	75	30,062	29,973	25,4	27,8	0	0
5	67	72	30,150	30,150	21,9	24	0	0
6	69	76	30,357	30,357	17,6	16,7	0	0

2.4 FUEL QUALITIES

Run Number	Pre-test Load			Test Load						
	Loading Weight Wet Basis (lbs)	Moisture Content Dry Basis (%)	Coal bed Weight (lbs)	Weight Wet Basis (lbs)	Density Wet Basis (lbs/cuft)	Moisture Content Dry Basis (%)	Piece Length (in.)	Number of 2X4's	Number of 4x4's	Number of Spacers
1	11,81	20,78	2,4	9,52	7,264	20,39	13,5	5	0	16
2	10,46	19,66	2,4	9,42	7,189	20,45	13,5	5	0	16
3	13,38	20,99	1,9	9,44	7,205	20,45	13,5	5	0	16
4	12,71	20,34	2,4	9,26	7,072	20,03	13,5	5	0	16
5	23,17	20,23	2,4	9,45	7,214	20,03	13,5	5	0	16
6	21,53	19,82	2,3	9,29	7,095	20,04	13,5	5	0	16

2.5 DILUTION TUNNEL FLOW RATE MEASUREMENTS AND SAMPLING DATA (ASTM E2515)

Average dilution tunnel measurements				Sample Data			
Run Number	Burn Rate (Min)	Volumetric Flow Rate (dscf/min)	Total Temperatures (°R)	Volume sampled (DSCF)		Particulate catch (mg)	
				1	2	1	2
1	209	175,85	541,62	39,505	38,421	1,70	1,60
2	120	168,39	560,46	22,759	22,050	3,90	3,40
3	94	166,41	570,85	17,938	17,400	4,80	5,10
4	180	171,79	544,84	34,174	33,189	2,10	1,90
5	199	176,20	544,67	37,738	36,773	1,50	1,40
6	229	172,91	541,48	43,488	42,115	2,90	2,70

2.6 DILUTION TUNNEL DUAL TRAIN PRECISION

Run Number	Sample Ratio		Total Emission (g)			
	Train 1	Train 2	Train 1	Train 2	% Deviation	Deviation g/kg
1	930,34	956,61	1,60	1,56	1,53%	0,013
2	887,86	916,40	3,51	3,17	5,11%	0,096
3	872,03	898,99	4,16	4,56	4,54%	0,111
4	904,86	931,72	1,90	1,77	3,54%	0,037
5	929,14	953,51	1,39	1,33	2,16%	0,016
6	910,49	940,18	2,69	2,59	1,82%	0,027

2.7 GENERAL SUMMARY OF RESULTS

Run Number	Burn Rate (kg/hr)	Average Surface Temperature (F)	Change in surface Temperature (F)	Initial Draft (in. H^2O)	static pressure tunnel (in. H^2O)	Primary Air Setting	Run Time (min)
1	1,029	348,87	-40,4	0,058	0,330	minimum	209
2	1,773	426,85	-40,4	0,078	0,320	medium	120
3	2,269	488,18	-30,5	0,072	0,320	full open	94
4	1,167	368,72	-18,4	0,061	0,340	minimum	180
5	1,077	389,53	-33,7	0,063	0,350	medium low	199
6	0,920	312,41	-43,1	0,061	0,340	minimum	229

3 PROCESS DESCRIPTION

3.1 DISCUSSION

The unit was delivered by the client and received in a good condition. Five runs have been done for weighted average with the optional convection fan at "ON" position. One confirmation test was done without the optional convection fan.

3.2 UNIT DIMENSIONS

Baffle

- Location: between top of combustion chamber and hearth
- Restriction: 2.5-inch X 15.5 inch at the front of the unit
- Dimensions: cover the hearth area minus the restriction at the front
- Material: Vermiculite 1 inch thick.

Bricks

- Inside firebox refractory brick 1¼ inch. thick cover all the sides and the back of the combustion chamber bottom covered by ½ thick refractory brick

Flue gas exhaust

- Location: top flue
- Dimensions: 6 in. diameter
- Material: Cast Iron

Gasket

- Glass holder: 1/8 X ½ Flat
- Window: 1/4 Round
- Door gasket against facing: fiberglass 3/8 round inch diameter
- Refer to appendix 6 for complete list and location of each gaskets

Overall unit dimension

- Overall dimensions: 23-inch-wide x 23-inch-deep x 28 ¾ inch high
- Firebox dimension: refer to appendix 12 for drawing, calculation and details
- Usable volume: 1.31 cuft

Convection fan

- Convection fan blower:
  - Free air: 150 CFM 110-120V (ref.: PT#90-57000)

Catalyst (appendix 6 for details):

- Advanced Catalyst Systems – R2.500X6.630X2.000-50WS
- Cell density: 50 CPSI
- Material: Fecralloy foil framed in 304 SS can

3.3 AIR SUPPLY SYSTEM

Description

- Primary air: Window wash design in cast iron channel fully gasketed on the top and bottom of the combustion chamber. Air intake on the middle-left side of the unit (if facing door of stove)
- Secondary air: secondary tube design with air intake coming from the bottom rear of unit, then up through a steel riser tube to the secondary air tube.

Characterization

The following table shows the inlet and outlet sections of each system. The air introduction system number is referred to on a set of drawings in Appendix 6.

AIR INTRODUCTION SYSTEM		INLET (1) sq. in.			OUTLET (sq. in.)
Identification	Type	Imin	Imax	Controlled	
APPENDIX 14 SHARED and PA	Primary	(air control Slide) 0.205	(air control Slide) 6.061	yes	(Air Wash) 4.766
APPENDIX 14 SHARED and SA	Secondary	(Riser opening) 0.600	(Riser opening) 0.600	yes	(Secondary Tube holes) 1.804
Appendix 14 TA	Pilot	(Orifice) 0.049	(Orifice) 0.049	None	(Orifice) 0.096

* This section would be filled by measuring and comparing with the manufacturer's drawings included in the test report.

Legend

Identification: Tag name referred to on drawings in Appendix 14, section airflow pattern
Type: Characterization of air intake
Imin: Minimum air intake of a particular air channel
Imax: Maximum air intake of a particular air channel
Controlled: Determines if a provision for air control is present
Outlet: Total air outlet of a particular air channel

3.4 OPERATION DURING TEST

All runs have been found appropriate, no anomalies happened and all runs below have been validate and found compliant. Three attempts to burn less than 0.8kg/hr has been done (run1,2 & 6) at the minimum setting, one run less than 1.0kg/hr but none od them less than 0.8kg/hr. Some negative weight has been found on filters only (sticking to gasket), none on probe or gaskets, those negative weight have been handled properly.

Run #1
This run was performed on March 18th 2019. It lasted 209 minutes and a 1.03 kg/hr burn rate was obtained & emission at 0.45 gr/hr. The optional convection fan Option was at on position during the entire test. Air inlet was set at the minimum setting, the burn rate for the low burn rate category was no greater than the rate that an operator can achieve in home use.

Run #2
This run was performed on March 19th 2019. It lasted 120 minutes and a 1.77 kg/hr burn rate was obtained & emission at 1.67 gr/hr. The optional convection fan Option was at on position during the entire test. Category 3 burn rate was obtained.

Run #3
This run was performed on March 20th 2019. It lasted 94 minutes and a 2.27 kg/hr burn rate was obtained & emission at 2.78 gr/hr. The optional convection fan Option was at on position during the entire test. Air inlet was at the maximum setting, category 4 burn rate was obtained.

Run #4
This run was performed on March 21st 2019. It lasted 180 minutes and a 1.17 kg/hr burn rate was obtained & emission at 0.61 gr/hr. The optional convection fan Option was at on position during the entire test. Air inlet was set at the minimum setting, the burn rate for the low burn rate category was no greater than the rate that an operator can achieve in home use.

Run #5
This run was performed on March 25th 2019. It lasted 199 minutes and a 1.08 kg/hr burn rate was obtained & emission at 0.41 gr/hr. The optional convection fan Option was at OFF position during the entire test. This test was done for confirmation of emission without convection fan.

Run #6
This run was performed on March 26th 2019. It lasted 229 minutes and a 0.92 kg/hr burn rate was obtained & emission at 0.69 gr/hr. The optional convection fan Option was at on position during the entire test. Air inlet was set at the minimum setting, the burn rate for the low burn rate category was no greater than the rate that an operator can achieve in home use.

- Details: Refer to the front page of each test run data sheets found in appendix for the detailed test sequence showing air supply settings and adjustments, fuel bed adjustments and operational specifics of the test unit. 3 attempts were done at the minimum air setting, the stove wasn't able to burn less than 0.8 kg/hr.

Test fuel cribs

- Type of wood: Douglas fir, grade c or better, 19 to 25% dry basis moisture content
- Description: for each test, description of the fuel crib is found on the front page of each test run data sheet together with photograph in appendix.

3.5 START-UP OPERATION

The complete manufacturer's firing procedure of each burn rate category is fully described in appendix 13.

3.6 SAMPLING LOCATIONS

Particulate samples are collected from the dilution tunnel at a point 15 feet from the tunnel entrance. The tunnel has two elbows in the system ahead of the sampling section. The sampling section is a continuous section of 6-inch diameter pipe straight over its entire length. Tunnel velocity pressure is determined by a standard pitot tube located upstream from the beginning of the sampling section. Thermocouple is installed on the pitot tube to measure the dry bulb temperature. MC is assumed, as allowed, to be 2%. Tunnel samplers are located downstream of the pitot tube and upstream from the end of this section. All detail of dilution tunnel can be found in appendix 8.

3.7 DRAWINGS

Various drawings of the stack gas sampling train and of dilution tunnel system are found in Appendix 1.

3.8 EMISSIONS EFFICIENCY TESTING EQUIPMENT LIST

The complete test equipment list together with all corresponding calibration data can be found in Appendix 3.

4 SAMPLING METHODS

4.1 PARTICULATE SAMPLING

Particulates were sampled in strict accordance with ASTM E2515. This method uses two identical sampling systems with Gelman A/E 61631 binder free (or equivalent), 47 mm diameter filters. The dryers used in the sample systems are filled with "Drierite" before each test run.

5 QUALITY ASSURANCE

5.1 INSTRUMENT CALIBRATION

5.1.1 GAS METERS

At the conclusion of each test program the gas meters are verified using the reference dry gas meter. This process involves sampling the train operation for 1 cubic foot of volume. With readings made to .01 fr', the resolution is 1 %, giving an accuracy higher than the 2% required by the standard.

5.1.2 SCALES

Before each test program, the different scales used are checked with traceable calibration weights to ensure their accuracy.

5.1.3 GAS ANALYZERS

The continuous analyzers are zeroed and spanned before each test with NBS traceable gases. A mid-scale multi-component calibration gas is then analyzed (values are recorded). At the conclusion of a test, the instruments are checked again with zero, span and calibration gases (values are recorded only). The drift in each meter is then calculated and must not exceed 5% of the scale used for the test.

5.2 TEST METHOD PROCEDURES

5.2.1 LEAK CHECK PROCEDURES

Before and after each test, each sample train is tested for leaks. Leakage rates are measured and must not exceed 0.02 CFM or 4% of the sampling rate. Leak checks are performed checking the entire sampling train. Pre-test and post-test leak checks are conducted with a vacuum of 5 inches of mercury. Vacuum is monitored during each test and the highest vacuum reached is then used for the post-test vacuum value. If leakage limits are not met, the test run is rejected. During these tests, the vacuum is typically less than 2 inches of mercury. Thus, leakage rates reported are expected to be much higher than actual leakage during the tests.

5.2.2 TUNNEL VELOCITY FLOW MEASUREMENT

The tunnel velocity is calculated from a center point pitot tube signal multiplied by an adjustment factor. This factor is determined by a traverse of the tunnel as prescribed in EPA Method 1. Final tunnel velocities and flow rates are calculated from EPA Method 2, Equation 6.9 and 6.10. (Tunnel cross sectional area is the average from both lines of traverse.)

Pitot tubes are cleaned before each test and leak checks are conducted after each test.

5.2.3 PM SAMPLING PROPORTIONALITY (ASTM E2515)

Proportionalities were calculated in accordance with ASTM E2515. The data and results are found in appendix.

APPENDIX 1: Raw data, forms and results

POLYTESTS
TESTING THROUGH YOUR REALITY

Date: 2019-03-18 Manufacturer: Hearthstone Model: GM 40
Project #: PI 20189 Run: 1 Tech: MM Reviewer: [illegible]

- kindling 2.6 LBS start fire
  - At 1.5 LBS close Door
  - by pass open
  - At 0.8 LBS ~~ob~~ insert preload
  - At 10.00 LBS close by pass
  - At 4.6 LBS close air inlet
  - At 2.4 LBS
    - open by pass
    - open Door
    - crush coal bed
    - close Door
    - close by pass
    - after 2 min
    - open by pass
    - open air inlet
    - open Door

TEST LOAD CONFIGURATION

    - insert load
    - close Door
    - close bypass
    - after 5 min close air inlet

POLYTESTS
TESTING THROUGH YOUR REALITY

PRE / POST CHECKS

Date: 2019-03-18 Manufacturer: Hearthstone Model: Gm 90

Project #: PT 20189 Run: 1 Tech: MM Reviewer: TP

Equipment #	Time	12%	22%
Em-191	7:00	ok	ok

Moisture Meter Calibration Check:

	Pre-Test	Post-Test
Facility Conditions:		
Air Velocity from less than 2 feet	0 (max50 Fpm)	(max50 Fpm)
Smoke Capture Check (tunnel velocity)	ok	NA
Picture	4 sides ok	ok
Wood Heater Conditions:		
Date Wood Heater Stack Cleaned	2019-03-18	
Date Dilution Tunnel Cleaned	2019-03-18	
Induced Draft Check (max 0.005 H2O)	ok	
Traverse before ignition	ok	
Flow Rate 140 cfm ±10%		ok
Temperature System:		
Ambient (65°-90°F)		ok °F
Wood Heater Surface (±125°F)		ok °F
Proportional Checks:		
Thermocouple check	ok	
Pitot Clean	ok	
Pitot verification	ok	

Sampling Train ID Numbers:

	Train 1st hour	Train 1	Train 2
Probe	1	35	50
Filter Front	34	36	38
Filter Back	35	37	39
Filter Thermocouple	11	11	12
Filter (<90°F)	ok	ok	ok

POLYTESTS
TESTING THROUGH YOUR REALITY

SAMPLING EQUIPMENT CHECK OUT

Date: 2019-03-18 Manufacturer: Hearthstone Model: GM 40

Project #: PI 20189 Run: 1 Tech: MM Reviewer: DP

Leakage Checks Tunnel Samplers

	System 1st hour		System 1		System 2	
Unplugged Flow Rate = .25cfm	Pre-Test ASTM (-15) CSA B415 (-5)	Post-Test (max test)	Pre-Test ASTM (-15) CSA B415 (-5)	Post-Test (Max test)	Pre-Test ASTM (-15) CSA B415 (-5)	Post-Test (Max test)
Vacuum (inches Hg.)	-15	-15	-15	-15	-15	-15
Final 1minute DGM (Liter)	874776,90	875921,02	874767,65	875924,10	824738,22	825868,08
Initial 1minute DGM (Liter)	874776,89	875921,01	874767,60	875921,10	824738,21	825868,07
Change © (Liter)	0,01	0,01	0,05	0	0,01	0,01
Allowable leakage .04 x Sample rate or 0.28Lpm CSA B415 (0.56)						
Check OK	Ok	Ok	Ok	Ok	Ok	Ok

Leakage Checks Flue Gas Sampler

Plugged Probe	Pre Test	Post Test
Vacuum (inches Hg.)	-5	-5
Rotometer Reading (mml/min.)	0	0
Flow Rate (lpm)	1.5	1.5
Allowable (.02 x Sample Rate)	30	30
Check OK	Ok	Ok

Leakage Checks Pitot

Plugged Probe	Pre Test 3 H2o static	Pre Test 0.4-0.5 H2o velocity	Post Test 3 H2o Static	Post Test 0.4-0.5 H2o velocity
Vacuum (inches Hg.)	3	4	3	.4
Check OK (no change after 15 sec.)	Ok	Ok	Ok	Ok

POLYTESTS
TESTING THROUGH YOUR REALITY

PRE-TEST SCALE AUDIT

Date: 2019-03-18 Manufacturer: Hearthstone Model: GM 40

Project #: pI 2618 9 Run: 1 Tech: MM Reviewer: DP

Scale Type	Audit		Measured Weight
	Equipment #	Weight	
Platform	EM-090	44 lbs, Class F	44 lbs
Wood	EM-090	44 lbs, Class F	44 lbs
Analytical	EM-128	100 mg, Class S	100 mg
Analytical	EM-129	200 g, Class S	200 g

LIMITS OF WEIGHT RANGES

ANALYTICAL SCALE: ..... 50%-150% of dry filter weight, ± 0.1 mg
PLATFORM SCALE.....20%-80% of ideal test load weight, ± 0.1 lbs or 1%
WOOD SCALE .....20%-80% of ideal test load weight, ± 0.01 lbs or 1%

Date: 2019-03-18 Manufacturer: Heathstone Model: GM 40

Project #: pI 20189 Run: 1 Tech: MM Reviewer: DP

FOR TUNNELS < 12 in

Barometric pressure (P_{bar}) 102.2 (KPa.) Static pressure (P_q) 0.33 (inches w.c.)
Inside diameter: Port A _____ Port B _____.
Tunnel cross sectional area: .1963Ft^2
Pitot tube type: Standard

Traverse Point	Position (inches)			Velocity Head Δ_p (inches H_2O)	Tunnel Temperature (°F)
	6 po	7 po	8 po		
A- Centroid	3.00	3.50	4	0.061	74.96
B - Centroid	3.00	3.50	4	0.061	75.78
A-1	0.40	0.50	0.50	0.048	74.81
A-2	1.50	1.75	2	0.054	75.51
A-3	4.50	5.25	6	0.058	75.91
A-4	5.60	6.5	7.5	0.049	75.78
B-1	0.40	0.50	0.50	0.048	74.91
B-2	1.50	1.75	2	0.056	74.01
B-3	4.50	5.25	6	0.053	73.66
B-4	5.60	6.5	7.5	0.049	73.04
				AVERAGE	

$$v_s = K_p C_p (\sqrt{\Delta p})_{avg} \sqrt{\frac{(T_s)_{avg}}{P_s M_s}}$$

Where,
C_p = pitot tube coefficient, dimension less = 0.99 for standard pitot.
Δ_p = manometer reading (inches H_2O)
T_s = average absolute dilution tunnel temperature (°F + 460)
P_s = absolute dilution tunnel gas pressure or $P_{bar} + P_{qg}$
P_q = static pressure $\frac{\text{in. } H_2O}{\{\ 13.6\ \}}$
M_s = 28.56, wet molecular weight of stack gas (alternatively, it may be measured)
K_p = 85.49 pitot tube constant, (conversion factor for English units)

$\Delta_p$avg. = average of the square roots of the velocity heads (Δ_p) measured at each traverse point.

POLYTESTS
TESTING THROUGH YOUR REALITY

CONTINUOUS ANALYZERS

Date: 2019-03-18 Manufacturer: Hearthstone Model: GM 40

Project #: pI 2.189 Run: 1 Tech: MM Reviewer: DP

Pre-Test (Adjust and Record)

	ZERO		SPAN		CAL. (Record Only)	
CO	0	0	2.989	3.000	1.007	1.000
Tolerance CO		+/- 0.02		+/- 0.15		+/- 0.05
CO_2	0	0	17.99	18.00	9.75	10.00
Tolerance CO2		+/- 0.02		+/- 0.5		+/- 0.5
O_2 informative CSA B415 calculated value	na	na	na	na	na	na
	Actual	Should Be	Actual	Should Be	Actual	Should Be

Post Test (Record Only)

	Zero	Span	Cal.	Zero Drift	Limit	Span Drift	Limit	Cal. Drift	Limit	OK?	Not OK*
CO	0	2.985	1.004	0	0.02	0.004	0.15	0.003	0.05	✓	
CO_2	0	17.95	9.71	6	0.02	0.04	0.5	0.04	0.5	✓	

POLYTESTS
TESTING THROUGH YOUR REALITY

TEST DATA LOG

Date: 2019-03-18 Manufacturer: Heatlstone Model: GM 46

Project #: PT 4189 Run: 1 Tech: MM Reviewer: NP

RAW DRY GAS METER READINGS

	System 1	System 2	Blanck
Final (Liter)	875 920,07	825867,10	582,92
Initial (Liter)	874 769,30	824739,02	530,45

AMBIENT CONDITIONS

	Before	After
Barometer (kPa):	102,1	101,8
Dry Bulb (F):	68,90	70,72
Humidity (%):	20,8	20,1

Flow Meter

	Start	End
Flow meter reading	N.A	NA

Flow Meter Verification

	Before	After
Flow meter Check (liters)	N.A	N.A
Scale Weight (Kg)	N.A	N.A

POLYTESTS
TESTING THROUGH YOUR REALITY

FUEL DATA

Date: 18 MARS 2019 Manufacturer: HEARTHSTONE Model: 6M-40

Project #: 01-20189 Run: 1 Tech: S.B. Reviewer: DP

FUEL DESCRIPTION:

Type of wood:

PRE-TEST LOAD

Piece Size	Weight		Meter Moisture Content (% dry)*				
1.5 x 3.5 x 8 in.	0.790	lbs.	21.6	23.1	22.4	22.4	22.6
1.5 x 3.5 x 8 in.	0.782	lbs.	20.4	21.3	20.8	20.9	21.1
1.5 x 3.5 x 8 in.	1.072	lbs.	21.4	20.9	21.8	20.9	21
1.5 x 3.5 x 8 in.	1.050	lbs.	19.9	19.8	20	20.3	19.9
1.5 x 3.5 x 8 in.	0.800	lbs.	20.1	20.2	20.4	21.	20.8
1.5 x 3.5 x 8 in.	0.820	lbs.	20.4	19.8	20	19.9	20.8
1.5 x 3.5 x 8 in.	0.814	lbs.	23.3	22.8	22.7	23	23.3
1.5 x 3.5 x 8 in.	0.988	lbs.	22	21.8	21.8	22.3	21.9
1.5 x 3.5 x 8 in.	0.762	lbs.	19.8	20	19.9	20.3	20.4
1.5 x 3.5 x 8 in.	0.784	lbs.	19.9	20.3	20.3	20.8	20.6
1.5 x 3.5 x 8 in.	0.794	lbs.	20.1	19.8	19.9	20.3	19.7
1.5 x 3.5 x 8 in.	0.800	lbs.	19.6	19.6	19.8	20.1	19.4
1.5 x 3.5 x 8 in.	0.800	lbs.	20.4	20.5	20.3	20.9	20.3
1.5 x 3.5 x 8 in.	0.756	lbs.	19.9	20.1	20.1	19.4	20.1
x x in.		lbs.					
x x in.		lbs.					
x x in.		lbs.					
x x in.		lbs.					
x x in.		lbs.					
x x in.		lbs.					
x x in.		lbs.					
x x in.		lbs.					
x x in.		lbs.					

TEST LOAD WEIGHT: 11.81 lbs

POLYTESTS
TESTING THROUGH YOUR REALITY

FUEL DATA

Date: 18 MAR 2025 Manufacturer: HEATH STOVE Model: GH-40

Project #: PI-20185 Run: 1 Tech: S. B. Reviewer: DP

FUEL DESCRIPTION:

Type of wood :

TEST LOAD

Piece Size	Weight		Meter Moisture Content (% dry)*				
1.5 x 3.5 x 13.5 in.	1.326	lbs.	21.7	19.1	20.9	20.5	19.3
1.5 x 3.5 x 13.5 in.	1.824	lbs.	21.3	19.6	21.8	21.3	20.9
1.5 x 3.5 x 13.5 in.	1.566	lbs.	19.6	21.3	21.3	21.4	20.1
1.5 x 3.5 x 13.5 in.	1.394	lbs.	20.1	19.4	20.9	19.3	19.9
1.5 x 3.5 x 13.5 in.	1.426	lbs.	19.4	19.3	19.8	20.3	20.1
0.75 x 1.5 x 5 in.	0.116	lbs.	19.3	19.6	20.1	20.3	19.7
0.75 x 1.5 x 5 in.	0.120	lbs.	19.6	19.7	20.3	20.4	20
0.75 x 1.5 x 5 in.	0.112	lbs.	20.3	20.6	20.3	19.7	19.4
0.75 x 1.5 x 5 in.	0.136	lbs.	19.8	19.9	20.1	21.4	20.9
0.75 x 1.5 x 5 in.	0.116	lbs.	19.9	21.3	20.9	20.4	20.3
0.75 x 1.5 x 5 in.	0.128	lbs.	21.4	21.3	21.1	20.6	20.9
0.75 x 1.5 x 5 in.	0.126	lbs.	20.4	19.9	21.3	20.6	20.7
0.75 x 1.5 x 5 in.	0.126	lbs.	20.3	20.1	21	20.4	20.3
0.75 x 1.5 x 5 in.	0.134	lbs.	19.3	19.8	20	20.3	19.7
0.75 x 1.5 x 5 in.	0.124	lbs.	21.3	21.0	20.3	20.4	21
0.25 x 1.5 x 5 in.	0.116	lbs.	20.9	20.4	20.5	19.9	21.4
0.75 x 1.5 x 5 in.	0.122	lbs.	21.6	21.3	20.8	20.7	20.9
0.75 x 1.5 x 5 in.	0.124	lbs.	20.3	19.9	19.6	20.1	21
0.75 x 1.5 x 5 in.	0.124	lbs.	19.4	19.6	19.8	20.4	20.5
0.75 x 1.5 x 5 in.	0.122	lbs.	21	20.8	20.7	21.3	20.8
0.75 x 1.5 x 5 in.	~~0.12~~ 0.132 (S)	lbs.	19.9	19.7	19.6	20.1	19.9
x x in.		lbs.					
x x in.		lbs.					
x x in.		lbs.					
x x in.		lbs.					
x x in.		lbs.					
x x in.		lbs.					

TEST LOAD WEIGHT: 9.52 lbs Min 20%: 1.9 Max 25%: 2.4

POLYTESTS
TESTING THROUGH YOUR REALITY

DILUTION TUNNEL PARTICULATE SAMPLER DATA

Date: 2019-03-14 Manufacturer: Hearthstone Model: GM 40

Project #: PT 20 189 Run: 1 Tech: MM Reviewer: DP

		SYSTEM 1 – 1st hour				SYSTEM 1				
Pre-test Weight Record		Probe & Housing Number	Front Filter Number	Back Filter Number	gaskets	Probe & Housing Number	Front Filter Number	Back Filter Number	gaskets	Blanck
Date	Time	1	34	35	10	35	36	37	20	40
2019-03-14	17:30	61,0671	0,1306	0,1301	34,4892	109,2847	0,1273	0,1297	35,4577	0,1314
2019-03-18	8:30	61,0672	0,1306	0,1302	34,4893	109,2848	0,1272	0,1296	35,4577	0,1312

		SYSTEM 1 – 1st hour				SYSTEM 1				
Post-test Weight Record		Probe & Housing Number	Front Filter Number	Back Filter Number	gaskets	Probe & Housing Number	Front Filter Number	Back Filter Number	gaskets	Blanck
Date	Time	1	34	35	10	35	36	37	20	40
2019-03-18	15:00	61,0674	0,1309	0,1284	34,4928	109,2849	0,1270	0,1288	35,4599	0,1315
2019-04-01	9:00	61,0674	0,1309	0,1283	34,4922	109,2849	0,1269	0,1285	35,4594	0,1314
2019-04-02	8:00	61.0674	0,1309	0,1283	34.4922	109.2847	0,1269	0,1285	35,4593	0,1313

POLYTESTS
TESTING THROUGH YOUR REALITY

DILUTION TUNNEL PARTICULATE SAMPLER DATA

Date: 2019-03-14 Manufacturer: Hearthstone Model: GM 40

Project #: PT 20189 Run: 1 Tech: MM Reviewer: BP

		SYSTEM 2			
Pre-test Weight Record		Probe & Housing Number	Front Filter Number	Back Filter Number	gaskets
Date	Time	50	38	39	41
2019-03-14	17:00	107.6467	0.1280	0.1299	34.9698
2019-03-18	8:20	107.6466	0.1281	0.1298	34.9699	

		SYSTEM 2			
Post-test Weight Record		Probe & Housing Number	Front Filter Number	Back Filter Number	gaskets
Date	Time	50	38	39	41
2019-03-18	15:00	107.6467	0.1281	0.1273	34.9746
2019-04-01	8:00	107.6467	0.1281	0.1273	34.9739
2019-04-02	8:00	107.6467	0.1281	0.1274	34.9739

Paramètres

Tous les facteurs de corrections et autres paramètres qui peuvent être modifiés par l'utilisateur du fichier sont regroupés ici.

Code verrouillage:	HEA

Description du test

Test standard	EPA	
Run #	1	
Date	18-03-2019	
Technicien	M.M	
Project #	PI 20189	

Description de l'unité

Manufacturier	HEARTHSTONE	
Modèle	GM40	
Combustion system	Cat	
Appliance type	WOODSTOVE	
Firebox volume	1,31	cu ft.
Appliance weight empty	N.A	lbs
Appliance weight full	N.A	lbs

Paramètres du test

Logging time	1	min
Manufacturer's rated heat output	N.A	BTU/h Donnée fournie par le manfacturier
Targeted category	1	
Targeted output	N.A	BTU/h
Cp steel	N.A	BTU/lb-°F

Échantillonnage

Blank sampling rate	0,20	cuft/min
Internal probe diameter	0,18	in.
Calibration Factor (DGM #1):	1,001	Dimensionless
Equipment number (DGM #1):	EM 178	
Calibration Factor (DGM #2):	0,987	Dimensionless
Equipment number (DGM #2):	EM 178	
Calibration Factor (DGM #3):	0,996	
Equipment number (DGM #3):	EM 070	Dimensionless

Tunnel

Targeted tunnel flow rate	140	scfm
Tunnel diameter	6	in.
Molecular weight	29	
Pitot tube type	Standard	
Pitot tube coefficient	0,99	Dimensionless

Project nu.	PI 20189
Date	18-03-2019
Technicien	M.M

Fuel data

Fuel type	Dimension		
Fuel specie	D. Fir		
HHV		19810,0	kJ/kg
%C		48,7	
%H		6,9	
%O		43,9	
%Ash		0,5	
HHV		8519,2	Btu/lb
LHV		7451,0	Btu/lb

Default Fuel Values

	D. Fir	Oak/Maple
HHV	19 810	19 887
%C	48,73	50
%H	6,87	6,6
%O	43,9	42,9
%Ash	0,5	0,5
HHV (Btu/lb)	8519	8552
LHV (Btu/lb)	7451	7480

	Start	End
Barometer (kPa):	102,1	101,8
Barometer (in.Hg):	30,150119	30,06152868
Dry Bulb (F):	68,9	70,72
Humidity (%):	20,8	20,1
Air velocity (ft/min)	0	0

DGM #1	Final:	30932,826	cuft	Final:	875920,070	Liter
	Initial:	30892,187	cuft	Initial:	874769,300	Liter
DGM #2	Final:	29165,222	cuft	Final:	825867,100	Liter
	Initial:	29125,384	cuft	Initial:	824739,020	Liter

DGM room				Final:	582,920	cuft
				Initial:	530,450	cuft

Numéro de la ligne dans "Raw data" à partir duquel les données du VRAI test commencent: 184

Autres données à rentrer: dans preload data, load data, traverse et filter set weight

Project nu.	PI 20189
Date	18-03-2019
Technicien	M.M

Preload data sheet

Test Load Weight:

Lower	Ideal	Upper
8,25	9,17	10,09

Load Volume: 0,3403 cu. ft

Number of Spaces:

Spacer weight (lbs):

Loading Density: 9,017 lbs./ft3

Load Density (wet): 34,713 lbs./ft3

Dry Wood Density: 28,740118

Piece Size (in): Thick	Wide	x Length	Weight lbs	Meter Moisture Content Dry Uncorrected %					Ave. MC x Weight	Volume Cubic Inches
1,5	3,5	8	0,79	21,6	23,1	22,4	22,4	22,6	17,7118	42,00
1,5	3,5	8	0,782	20,4	21,3	20,8	20,9	21,1	16,3438	42,00
1,5	3,5	8	1,072	21,4	20,9	21,8	20,9	21	22,7264	42,00
1,5	3,5	8	1,05	19,9	19,8	20	20,3	19,9	20,979	42,00
1,5	3,5	8	0,8	20,1	20,2	20,4	21	20,8	16,4	42,00
1,5	3,5	8	0,82	20,4	19,8	20	19,9	20,8	16,5476	42,00
1,5	3,5	8	0,814	23,3	22,8	22,7	23	23,3	18,73828	42,00
1,5	3,5	8	0,988	22	21,8	21,8	22,3	21,9	21,69648	42,00
1,5	3,5	8	0,762	19,8	20	19,9	20,3	20,4	15,30096	42,00
1,5	3,5	8	0,784	19,9	20,3	20,3	20,8	20,6	15,97792	42,00
1,5	3,5	8	0,794	20,1	19,8	19,9	20,3	19,7	15,84824	42,00
1,5	3,5	8	0,8	19,6	19,6	19,8	20,1	19,4	15,76	42,00
1,5	3,5	8	0,8	20,4	20,5	20,3	20,9	20,3	16,384	42,00
1,5	3,5	8	0,756	19,9	20,1	20,1	19,4	20,1	15,05952	42,00
										0,00
										0,00
										0,00
										0,00
										0,00
										0,00
										0,00
										0,00
										0,00
										0,00
										0,00
										0,00
										0,00
										0,00
										0,00
										0,00
										0,00
										0,00
										0,00
										0,00
										0,00
										0,00
										0,00
								SUM MC:	245,474	

PreTest Load Weight: 11,81 lbs.

Dry Weight: 4,44 kg.

Average Moisture Content: %

Dry: 20,78

20,78

Must be 18-28

Wet: 17,21

must be 15,2-22

Project nu.	PI 20189
Date	18-03-2019
Technicien	M.M

FUEL LOAD DATA SHEET, CSA B415

Test Load Weight:

Lower	Ideal	Upper
8,3	9,2	10,1

* For boilers, a loading density factor of 10 lb/ft3 is applied

Load Volume: 0,21 cu. ft

Loading Density: 7,3 lbs./ft3

Number of Spaces: 16

Spacer weight: lbs

Load Density (wet): 36,7 lbs./ft3

Dry Wood Density: 30,5 lbs./ft3

Piece Size (in): Thick	Wide	Length	Weight lbs	Meter Moisture Content Dry Uncorrected %					Ave. MC x Weight	Volume Cubic Inches	Ave. MC %
1,5	3,5	13,5	1,33	21,70	19,10	20,90	20,50	19,30	26,9178	70,88	20,3
1,5	3,5	13,5	1,82	21,30	19,60	21,80	21,30	20,90	38,26752	70,88	21,0
1,5	3,5	13,5	1,57	19,60	21,30	21,30	21,40	20,10	32,47884	70,88	20,7
1,5	3,5	13,5	1,39	20,10	19,40	20,90	19,30	19,90	27,76848	70,88	19,9
1,5	3,5	13,5	1,43	19,40	19,30	19,80	20,30	20,10	28,20628	70,88	19,8
1,5	0,75	5	0,12	19,30	19,60	20,10	20,30	19,70	2,2968	5,63	19,8
1,5	0,75	5	0,12	19,60	19,70	20,30	20,40	20,00	2,44	5,63	20,0
1,5	0,75	5	0,11	20,30	20,60	20,30	19,70	19,40	2,24672	5,63	20,1
1,5	0,75	5	0,14	19,80	19,90	20,10	21,40	20,90	2,77712	5,63	20,4
1,5	0,75	5	0,12	19,90	21,30	20,90	20,40	20,30	2,38496	5,63	20,6
1,5	0,75	5	0,13	21,40	21,30	21,10	20,60	20,90	2,69568	5,63	21,1
1,5	0,75	5	0,13	20,40	19,90	21,30	20,60	20,70	2,59308	5,63	20,6
1,5	0,75	5	0,13	20,30	20,10	21,00	20,40	20,30	2,57292	5,63	20,4
1,5	0,75	5	0,13	19,30	19,80	20,00	20,30	19,70	2,65588	5,63	19,8
1,5	0,75	5	0,12	21,30	21,00	20,30	20,40	21,00	2,5792	5,63	20,8
1,5	0,75	5	0,12	20,90	20,40	20,50	19,90	21,40	2,39192	5,63	20,6
1,5	0,75	5	0,12	21,60	21,30	20,80	20,70	20,90	2,56932	5,63	21,1
1,5	0,75	5	0,12	20,30	19,90	19,60	20,10	21,00	2,50232	5,63	20,2
1,5	0,75	5	0,12	19,40	19,60	19,80	20,40	20,50	2,47256	5,63	19,9
1,5	0,75	5	0,122	21,00	20,80	20,70	21,3	20,80	2,55224	5,63	20,9
1,5	0,75	5	0,132	19,90	19,70	19,60	20,1	19,9	2,61888	5,63	19,8
										0,00	
										0,00	
										0,00	
										0,00	
										0,00	
										0,00	
										0,00	
										0,00	
										0,00	
								SUM MCx	193,98852		20,4 %

Test Load Weight: 9,52 lbs.

Dry Weight: 3,59 kg.

Average Moisture Content: %

Dry: 20,39 Dry(EPA) 20,39 Dry(B415 20,39

20,39 Must be 19-25

Wet: 16,93 must be 15,2-22

Coal Bed Range: 1,9 lbs. to 2,4 lbs.

TEST CHARGE:

Coal bed weight: 2,4 lbs.

Project nu.	PI 20189
Date	18-03-2019
Technicien	M.M

Tunnel Traverse Worksheet (for velocity calculations)

Static Pressure: 0,33 in. H20
Barometer: 29,900 in. Hg

Pour un tunnel de 12" et plus, prendre 6 lectures

	TUNNEL VELOCITY	TUNNEL TEMP	SQUARE ROOT
	In. wc	°F	
A center			0,0000
B center			0,0000
A1			0,0000
A2			0,0000
A3			0,0000
A4			0,0000
A5			0,0000
A6			0,0000
B1			0,0000
B2			0,0000
B3			0,0000
B4			0,0000
B5			0,0000
B6			0,0000
AVERAGE	#DIV/0!	#DIV/0!	0,0000

PITOT CONSTANT=
0,937

Pour un tunnel moins de 12", prendre 4 lectures

	TUNNEL VELOCITY	TUNNEL TEMP	SQUARE ROOT
	In. wc	°F	
A center	0,061	74,96	0,2470
B center	0,061	75,58	0,2470
A1	0,048	74,81	0,2191
A2	0,054	75,51	0,2324
A3	0,058	75,91	0,2408
A4	0,049	75,78	0,2214
B1	0,048	74,910	0,2191
B2	0,056	74,010	0,2366
B3	0,053	73,660	0,2302
B4	0,049	73,040	0,2214
AVERAGE	0,0537	74,8170	0,2315

Project nu.	PI 20189
Date	18-03-2019
Technicien	M.M

Filter set weight

	System 1 (g) 1st hour				System 1 (g)				System 2 (g)				Ambient blank (g)	Date	Heure
	probe	front	back	gasket	probe	front	back	gasket	probe	front	back	gasket	Filter		
Number	1	34	35	10	35	36	37	20	50	38	39	41	40		
Before (1)															
Before (2)															
Before (3)															
Before (4)															
Before (5)	61,0671	0,1306	0,1301	34,4892	109,2847	0,1273	0,1297	35,4577	107,6467	0,1280	0,1299	34,9698	0,1311	2019-03-14	17:00
Before (6)	61,0672	0,1306	0,1302	34,4893	109,2848	0,1272	0,1296	35,4577	107,6466	0,1281	0,1298	34,9699	0,1312	2019-03-18	08:00
After (1)	61,0674	0,1309	0,1284	34,4928	109,2849	0,1270	0,1288	35,4599	107,6467	0,1281	0,1273	34,9746	0,1315	2019-03-08	15:00
After (2)	61,0674	0,1309	0,1283	34,4922	109,2849	0,1269	0,1285	35,4594	107,6467	0,1281	0,1273	34,9739	0,1314	2019-04-01	08:00
After (3)	61,0674	0,1309	0,1283	34,4922	109,2849	0,1269	0,1285	35,4593	107,6467	0,1281	0,1274	34,9739	0,1313	2019-04-02	08:00
After (4)															
After (5)															
After (6)	61,0674	0,1309	0,1283	34,4922	109,2849	0,1269	0,1285	35,4593	107,6467	0,1281	0,1274	34,9739	0,1313	2019-04-02	08:00
Difference	0,0002	0,0003	-0,0019	0,0029	0,0001	-0,0003	-0,0011	0,0016	0,0001	0,0000	-0,0024	0,0040	0,0001		
Total (mg)		1,5				1,8				1,7			0,1		
Total ajusté (mg)		**1,40**				**1,70**				**1,60**					

Project nu.	PI 20189
Date	18-03-2019
Technicien	M.M

Demonstration purpose only, not the compliance number.

Filter set weight

	System 1 (g) 1st hour				System 1 (g)				System 2 (g)				Ambient blank (g)	Date	Heure
	probe	front	back	gasket	probe	front	back	gasket	probe	front	back	gasket	Filter		
Number	1	34	35	10	35	36	37	20	50	38	39	41	40		
Before (1)															
Before (2)															
Before (3)															
Before (4)															
Before (5)	61,0671	0,1306	0,1301	34,4892	109,2847	0,1273	0,1297	35,4577	107,6467	0,1280	0,1299	34,9698	0,1311	2019-03-14	17:00
Before (6)	61,0672	0,1306	0,1302	34,4893	109,2848	0,1272	0,1296	35,4577	107,6466	0,1281	0,1298	34,9699	0,1312	2019-03-18	08:00
After (1)	61,0674	0,1309	0,1284	34,4928	109,2849	0,1270	0,1288	35,4599	107,6467	0,1281	0,1273	34,9746	0,1315	2019-03-08	15:00
After (2)	61,0674	0,1309	0,1283	34,4922	109,2849	0,1269	0,1285	35,4594	107,6467	0,1281	0,1273	34,9739	0,1314	2019-04-01	08:00
After (3)	61,0674	0,1309	0,1283	34,4922	109,2849	0,1269	0,1285	35,4593	107,6467	0,1281	0,1274	34,9739	0,1313	2019-04-02	08:00
After (4)															
After (5)															
After (6)	61,0674	0,1309	0,1302	34,4922	109,2849	0,1272	0,1296	35,4593	107,6467	0,1281	0,1298	34,9739	0,1313	2019-04-02	08:00
Difference	0,0002	0,0003	0,0000	0,0029	0,0001	0,0000	0,0000	0,0016	0,0001	0,0000	0,0000	0,0040	0,0001		
Total (mg)		3,4				5,1				4,1			0,1		
Total ajusté (mg)		**3,30**				**5,00**				**4,00**					

Project nu.	PI 20189
Date	18-03-2019
Technicien	M.M

emission rate 1,2g/hr. filter weigth rounded to zero, not the compliance number

*		*	*	*	*	*1	*2	*3	*4	*5	*6	*7	*8	*	Mass flow 1	DGM 1	DGM 1	Filter 1	Mass flow 2	DGM 2	DGM 2	Filter 2
Elapsed		Weight				Flue	Room	Tunnel	Unit	Unit	Unit	Unit	Unit	Catalyst	Reading	Inlet T	Outlet T	Temp	Reading	Inlet T	Outlet T	Temp
Time	Raw data row	Remaining	CO	CO_2	O_2	Gas	Temp	Dry Bulb	Top	Back	R.Side	L.Side	Bottom	up								
min		lbs	%	%	%	°F	°F	°F	°F	°F	°F	°F	°F	°F	cuft/min	oF	oF	oF	cuft/min	oF	oF	oF
0,00	184,00	9,5	0,2	3,5	0,0	263,3	68,1	116,6	333,5	307,4	355,4	327,9	414,9	517,0	0,19	72,35	71,87	70,49	0,19	72,47	72,38	71,56
1,0	185,0	9,4	0,1	1,5	0,0	263,1	68,2	93,4	328,4	308,5	354,7	327,0	412,3	511,4	0,19	72,69	71,98	70,58	0,19	72,71	72,48	72,00
2,0	186,0	9,4	0,0	3,5	0,0	275,5	68,2	90,5	326,5	307,8	353,5	325,5	411,0	572,5	0,19	72,85	72,01	70,62	0,19	72,79	72,52	72,06
3,0	187,0	9,3	0,0	4,4	0,0	288,9	68,1	89,9	325,7	305,9	351,9	324,2	409,4	617,8	0,19	72,89	72,05	70,67	0,19	72,85	72,55	72,20
4,0	188,0	9,2	0,0	5,8	0,0	300,7	67,9	89,4	328,7	304,7	350,5	322,7	407,6	644,2	0,19	72,87	72,08	70,77	0,19	72,85	72,57	72,32
5,0	189,0	9,2	0,0	7,3	0,0	288,7	68,2	86,7	331,5	303,0	348,7	321,0	407,1	632,7	0,19	72,81	72,08	70,83	0,19	72,80	72,58	72,41
6,0	190,0	9,1	0,0	5,2	0,0	259,3	68,1	84,6	331,5	301,2	346,5	319,6	405,2	613,2	0,19	72,74	72,11	70,88	0,19	72,82	72,61	72,46
7,0	191,0	9,1	0,0	5,4	0,0	247,9	68,1	83,7	329,9	297,9	344,1	317,3	403,2	608,8	0,19	72,74	72,10	70,94	0,19	72,80	72,63	72,51
8,0	192,0	9,0	0,0	5,2	0,0	241,4	68,2	82,6	328,1	295,9	341,8	315,5	401,3	606,7	0,19	72,57	72,12	71,00	0,19	72,72	72,63	72,54
9,0	193,0	9,0	0,0	5,2	0,0	238,3	67,9	82,2	326,0	293,6	338,8	313,5	398,1	607,8	0,19	72,42	72,08	71,06	0,19	72,62	72,61	72,54
10,0	194,0	8,9	0,0	5,5	0,0	236,9	68,0	82,1	324,4	291,9	335,5	311,1	394,7	610,6	0,19	72,36	72,06	71,10	0,19	72,56	72,60	72,57
11,0	195,0	8,9	0,0	5,7	0,0	236,5	68,1	81,6	323,0	289,7	333,2	308,5	392,0	621,1	0,19	72,25	72,05	71,16	0,19	72,50	72,58	72,58
12,0	196,0	8,8	0,0	6,1	0,0	238,3	67,8	81,4	321,6	288,0	330,2	306,6	389,2	634,4	0,19	72,13	72,00	71,19	0,19	72,41	72,58	72,58
13,0	197,0	8,7	0,0	6,3	0,0	245,5	67,8	81,6	323,0	285,0	327,6	304,3	386,0	645,0	0,19	71,91	71,96	71,24	0,19	72,24	72,53	72,63
14,0	198,0	8,6	0,0	11,5	0,0	258,4	67,9	82,6	330,8	282,2	325,5	302,4	383,5	717,6	0,19	71,76	71,91	71,30	0,19	72,09	72,51	72,67
15,0	199,0	8,5	0,4	16,3	0,0	266,5	67,7	82,7	339,2	280,8	322,4	301,1	380,4	730,5	0,19	71,68	71,89	71,34	0,19	72,03	72,48	72,70
16,0	200,0	8,4	0,0	13,6	0,0	271,9	67,7	82,5	348,0	279,3	320,9	299,8	377,6	737,3	0,19	71,63	71,88	71,37	0,19	72,00	72,48	72,74
17,0	201,0	8,3	0,0	13,9	0,0	275,7	67,7	83,0	356,2	278,5	318,8	298,8	374,7	744,1	0,19	71,56	71,85	71,39	0,19	71,92	72,45	72,78
18,0	202,0	8,1	0,0	13,0	0,0	281,0	67,7	83,5	363,6	278,0	317,4	298,0	371,6	760,1	0,19	71,51	71,83	71,44	0,19	71,90	72,44	72,82
19,0	203,0	8,0	0,0	14,0	0,0	287,9	67,7	83,8	370,5	277,7	316,6	297,0	368,7	775,9	0,19	71,48	71,82	71,46	0,19	71,85	72,42	72,85
20,0	204,0	7,9	0,0	14,3	0,0	292,8	67,6	83,9	376,8	277,0	315,2	296,9	365,9	780,4	0,19	71,39	71,79	71,49	0,19	71,76	72,38	72,88
21,0	205,0	7,8	0,0	14,8	0,0	295,0	67,5	84,3	382,5	277,3	314,1	296,8	363,0	781,2	0,19	71,31	71,74	71,50	0,19	71,70	72,37	72,93
22,0	206,0	7,6	0,0	14,7	0,0	297,1	67,5	84,2	387,6	276,4	312,8	297,2	360,1	771,0	0,19	71,33	71,74	71,54	0,19	71,69	72,36	72,96
23,0	207,0	7,5	0,0	14,6	0,0	303,3	67,5	84,8	396,8	277,3	313,0	297,6	357,6	785,9	0,19	71,25	71,70	71,58	0,19	71,62	72,33	73,02
24,0	208,0	7,4	0,3	16,7	0,0	309,6	67,6	85,1	407,5	278,1	312,7	298,5	355,0	805,5	0,19	71,19	71,68	71,62	0,19	71,56	72,30	73,05
25,0	209,0	7,2	0,5	16,8	0,0	312,7	67,4	85,0	418,6	278,5	313,1	299,5	352,6	804,2	0,19	71,15	71,66	71,62	0,19	71,53	72,29	73,08
26,0	210,0	7,1	0,1	16,5	0,0	315,3	67,4	85,3	427,7	278,2	312,5	301,0	350,0	796,8	0,19	71,20	71,65	71,67	0,19	71,52	72,26	73,12
27,0	211,0	7,0	0,0	15,7	0,0	317,1	67,4	85,6	436,3	279,5	313,6	301,7	347,5	805,5	0,19	71,19	71,63	71,70	0,19	71,48	72,26	73,18
28,0	212,0	6,9	0,0	15,2	0,0	318,2	67,4	85,4	443,3	280,2	314,2	302,8	345,3	807,9	0,19	71,08	71,61	71,70	0,19	71,37	72,22	73,21
29,0	213,0	6,7	0,0	15,5	0,0	319,6	67,4	85,8	450,3	280,9	315,0	304,0	343,1	815,1	0,19	71,00	71,57	71,75	0,19	71,31	72,21	73,22
30,0	214,0	6,6	0,1	16,5	0,0	324,1	67,5	86,0	457,4	282,4	316,2	305,0	340,6	833,6	0,19	70,98	71,54	71,79	0,19	71,26	72,19	73,26
31,0	215,0	6,5	0,9	17,3	0,0	327,2	67,3	86,2	464,7	283,1	316,5	306,6	338,6	827,2	0,19	71,05	71,53	71,82	0,19	71,27	72,17	73,30
32,0	216,0	6,3	1,0	17,3	0,0	329,9	67,4	86,5	471,4	283,7	317,7	308,3	336,5	818,9	0,19	71,12	71,52	71,87	0,19	71,28	72,18	73,37
33,0	217,0	6,2	1,4	17,2	0,0	331,4	67,5	86,5	478,3	285,3	318,9	310,2	334,1	818,2	0,19	71,12	71,49	71,88	0,19	71,28	72,18	73,42
34,0	218,0	6,0	1,4	17,2	0,0	333,4	67,4	86,7	485,4	286,2	320,3	312,4	331,9	815,7	0,19	71,13	71,49	71,88	0,19	71,27	72,15	73,46
35,0	219,0	5,9	1,4	17,3	0,0	334,4	67,5	86,9	491,3	286,7	322,1	315,0	330,1	817,5	0,19	71,17	71,49	71,93	0,19	71,30	72,13	73,51
36,0	220,0	5,8	1,6	17,2	0,0	335,9	67,5	86,9	497,5	288,5	324,4	317,2	328,7	819,7	0,19	71,31	71,51	71,93	0,19	71,36	72,12	73,54
37,0	221,0	5,6	1,7	17,2	0,0	336,8	67,7	88,4	502,3	289,4	325,6	320,6	326,6	817,8	0,19	71,59	71,55	71,99	0,19	71,50	72,16	73,63
38,0	222,0	5,5	1,8	17,2	0,0	336,4	68,0	89,6	509,1	291,3	328,6	322,8	325,2	818,2	0,19	72,00	71,61	72,04	0,19	71,76	72,22	73,78
39,0	223,0	5,4	1,9	17,2	0,0	336,3	68,1	90,7	515,8	293,6	330,6	325,1	323,8	819,4	0,19	72,38	71,72	72,09	0,19	72,03	72,29	73,93
40,0	224,0	5,3	2,0	17,2	0,0	335,3	68,4	91,6	521,3	296,2	333,5	328,2	322,3	820,7	0,19	72,72	71,84	72,19	0,19	72,31	72,40	74,08
41,0	225,0	5,1	1,8	17,2	0,0	333,9	68,5	91,9	527,5	298,0	336,2	331,2	320,8	826,6	0,19	73,07	71,99	72,26	0,19	72,56	72,51	74,21
42,0	226,0	5,0	1,6	17,3	0,0	333,8	68,7	91,6	532,0	300,0	338,4	335,1	319,4	832,6	0,19	73,38	72,12	72,36	0,19	72,84	72,62	74,38
43,0	227,0	4,9	1,5	17,4	0,0	334,4	68,5	91,1	536,3	301,7	341,1	338,1	317,2	834,2	0,19	73,59	72,20	72,42	0,19	73,02	72,73	74,48
44,0	228,0	4,8	1,3	17,4	0,0	333,1	68,4	90,5	539,8	302,9	344,1	341,0	316,1	838,5	0,19	73,67	72,25	72,53	0,19	73,13	72,78	74,55
45,0	229,0	4,7	0,9	17,3	0,0	331,7	68,4	90,4	542,4	304,5	346,7	344,0	313,9	847,9	0,19	73,67	72,29	72,60	0,19	73,18	72,83	74,63
46,0	230,0	4,6	0,4	17,2	0,0	330,1	68,7	90,0	544,0	306,5	348,9	346,8	312,0	849,7	0,19	73,64	72,34	72,68	0,19	73,24	72,88	74,69
47,0	231,0	4,5	0,2	17,1	0,0	330,4	68,6	89,6	545,7	308,9	352,1	350,0	310,1	846,8	0,19	73,60	72,36	72,77	0,19	73,26	72,92	74,71
48,0	232,0	4,4	0,5	17,6	0,0	331,5	68,7	89,2	547,6	311,0	355,0	351,9	308,4	843,3	0,19	73,50	72,38	72,83	0,19	73,22	72,94	74,75
49,0	233,0	4,3	0,6	17,6	0,0	331,9	68,7	89,2	550,0	312,9	356,8	355,0	305,9	842,8	0,19	73,43	72,38	72,92	0,19	73,20	72,96	74,79
50,0	234,0	4,2	0,8	17,4	0,0	331,7	68,5	89,2	552,2	316,0	359,3	358,0	304,2	840,4	0,19	73,36	72,38	72,96	0,19	73,19	72,98	74,85
51,0	235,0	4,1	0,9	17,4	0,0	331,6	68,6	88,8	554,1	317,2	361,7	360,8	302,4	840,4	0,19	73,25	72,38	73,04	0,19	73,13	73,00	74,85
52,0	236,0	3,9	1,0	17,4	0,0	331,6	68,5	88,8	556,4	321,5	364,2	363,5	300,7	838,7	0,19	73,15	72,38	73,09	0,19	73,05	72,98	74,89
53,0	237,0	3,8	1,1	17,4	0,0	330,6	68,2	88,5	560,1	325,4	367,3	366,5	299,0	838,2	0,19	73,07	72,36	73,12	0,19	72,96	72,98	74,88
54,0	238,0	3,7	1,0	17,4	0,0	329,2	68,5	88,4	561,5	327,5	369,9	368,7	297,6	838,1	0,19	72,97	72,35	73,16	0,19	72,90	72,98	74,93
55,0	239,0	3,6	0,9	17,3	0,0	329,0	68,2	88,4	563,4	331,8	372,4	371,3	295,9	838,9	0,19	72,94	72,34	73,20	0,19	72,86	72,97	74,94
56,0	240,0	3,5	0,9	17,3	0,0	328,3	68,5	88,2	565,4	333,0	374,4	373,9	294,0	837,2	0,19	72,85	72,33	73,24	0,19	72,80	72,98	74,95
57,0	241,0	3,4	0,7	17,3	0,0	327,7	68,3	88,1	566,3	336,1	377,2	377,0	292,3	838,8	0,19	72,79	72,29	73,26	0,19	72,74	72,95	74,95
58,0	242,0	3,3	0,6	17,2	0,0	326,9	68,3	88,2	567,6	339,9	380,2	379,5	290,5	837,5	0,19	72,72	72,28	73,28	0,19	72,68	72,95	74,95
59,0	243,0	3,2	0,5	17,2	0,0	326,1	68,4	87,2	567,6	340,8	382,2	382,5	289,3	838,8	0,19	72,73	72,27	73,21	0,19	72,65	72,94	74,97
60,0	244,0	3,1	0,4	17,0	0,0	324,3	68,4	87,4	567,2	343,6	385,0	384,9	287,7	834,6	0,19	72,68	72,26	73,16	0,19	72,59	72,95	74,95
61,0	245,0	3,0	0,3	16,8	0,0	322,9	68,2	87,1	566,6	345,5	387,0	387,3	286,4	831,6	0,19	72,67	72,25	73,11	0,19	72,56	72,92	74,93
62,0	246,0	3,0	0,1	16,8	0,0	323,6	68,4	87,3	566,3	348,0	389,5	390,0	284,7	841,1	0,19	72,64	72,22	73,12	0,19	72,52	72,92	74,92
63,0	247,0	2,9	0,3	17,3	0,0	323,6	68,2	87,2	568,2	350,0	391,9	392,6	282,9	847,1	0,19	72,60	72,20	73,08	0,19	72,48	72,89	74,89
64,0	248,0	2,8	0,2	17,1	0,0	322,3	68,3	87,2	569,3	351,4	394,0	394,7	281,4	844,8	0,19	72,53	72,17	73,06	0,19	72,44	72,89	74,89
65,0	249,0	2,7	0,1	16,7	0,0	320,5	68,2	86,7	570,7	352,7	396,5	397,4	280,2	833,4	0,19	72,44	72,14	73,02	0,19	72,37	72,85	74,87
66,0	250,0	2,6	0,0	16,3	0,0	317,8	68,3	86,6	570,7	353,9	398,6	399,5	279,1	816,4	0,19	72,41	72,11	72,96	0,19	72,35	72,83	74,86
67,0	251,0	2,6	0,0	15,7	0,0	313,8	68,4	86,1	570,4	354,7	400,3	401,5	278,2	797,6	0,19	72,44	72,12	72,91	0,19	72,34	72,83	74,84
68,0	252,0	2,5	0,0	15,3	0,0	310,1	68,3	85,8	570,5	356,0	402,5	404,0	277,4	780,8	0,19	72,48	72,11	72,87	0,19	72,37	72,84	74,85
69,0	253,0	2,4	0,0	15,1	0,0	306,2	68,2	85,5	568,4	357,1	403,9	406,0	276,5	771,8	0,19	72,46	72,11	72,81	0,19	72,28	72,84	74,83
70,0	254,0	2,4	0,0	14,3	0,0	302,0	68,2	85,0	565,4	357,6	404,3	408,4	276,1	762,3	0,19	72,41	72,08	72,76	0,19	72,26	72,85	74,82
71,0	255,0	2,3	0,0	13,7	0,0	298,4	68,0	85,2	562,0	357,9	405,7	409,5	275,5	756,0	0,19	72,35	72,07	72,69	0,19	72,19	72,81	74,78
72,0	256,0	2,3	0,0	13,3	0,0	294,8	67,9	84,8	557,4	358,6	406,0	411,5	275,0	753,7	0,19	72,29	72,03	72,65	0,19	72,11	72,80	74,76
73,0	257,0	2,3	0,0	12,8	0,0	291,1	68,1	84,1	552,6	359,8	406,9	412,6	274,7	747,9	0,19	72,21	72,02	72,59	0,19	72,04	72,76	74,67
74,0	258,0	2,2	0,0	12,2	0,0	286,7	68,0	83,9	547,3	360,0	406,9	414,3	274,4	740,8	0,19	72,18	72,02	72,56	0,19	72,02	72,73	74,62
75,0	259,0	2,2	0,0	11,8	0,0	283,0	67,9	83,5	541,6	359,5	406,9	415,6	274,4	729,4	0,19	72,11	71,96	72,48	0,19	71,93	72,70	74,57
76,0	260,0	2,2	0,0	11,5	0,0	279,6	67,9	83,1	535,6	358,4	407,9	415,9	274,8	724,9	0,19	72,03	71,95	72,42	0,19	71,88	72,67	74,47
77,0	261,0	2,1	0,0	11,1	0,0	276,6	68,0	83,2	529,6	359,0	406,9	417,5	274,8	723,4	0,19	72,00	71,92	72,35	0,19	71,84	72,66	74,39
78,0	262,0	2,1	0,0	10,9	0,0	273,7	67,9	82,7	523,6	358,3	407,8	417,9	275,2	718,9	0,19	72,04	71,90	72,26	0,19	71,90	72,64	74,35
79,0	263,0	2,1	0,0	10,6	0,0	269,8	68,2	84,1	517,5	356,8	407,3	418,8	275,3	710,6	0,19	72,20	71,96	72,23	0,19	72,01	72,65	74,34
80,0	264,0	2,0	0,0	10,6	0,0	266,4	68,3	85,4	511,3	356,8	407,7	418,3	276,0	700,5	0,19	72,55	72,02	72,19	0,19	72,23	72,70	74,34
81,0	265,0	2,0	0,0	10,6	0,0	263,0	68,5	86,1	504,9	357,9	407,2	418,0	276,7	690,0	0,19	72,90	72,13	72,15	0,19	72,49	72,78	74,42
82,0	266,0	2,0	0,0	10,5	0,0	259,6	68,7	86,6	498,9	358,3	406,5	418,1	277,2	684,1	0,19	73,26	72,25	72,19	0,19	72,78	72,86	74,51
83,0	267,0	2,0	0,0	10,3	0,0	257,0	68,8	86,9	492,5	359,1	405,6	417,2	277,9	678,0	0,19	73,57	72,37	72,15	0,19	73,03	72,99	74,57
84,0	268,0	2,0	0,0	10,2	0,0	254,7	68,9	86,4	486,0	359,3	405,1	417,0	278,4	670,4	0,19	73,86	72,49	72,13	0,19	73,27	73,08	74,61
85,0	269,0	1,9	0,0	10,1	0,0	252,2	68,9	85,5	479,5	358,4	403,9	416,1	279,1	663,5	0,19	74,03	72,61	72,13	0,19	73,46	73,18	74,63
86,0	270,0	1,9	0,0	10,0	0,0	249,8	68,8	84,8	473,0	358,5	403,0	415,5	279,5	659,0	0,19	74,10	72,66	72,12	0,19	73,55	73,23	74,65
87,0	271,0	1,9	0,0	9,9	0,0	247,6	68,6	84,3	467,2	356,1	401,7	414,7	280,6	654,2	0,19	74,12	72,72	72,08	0,19	73,67	73,29	74,64
88,0	272,0	1,9	0,0	9,8	0,0	245,6	68,6	83,9	461,6	357,3	400,4	413,5	280,9	648,1	0,19	74,03	72,74	72,08	0,19	73,72	73,32	74,64

89,0	273,0	1,9	0,0	9,7	0,0	242,9	68,4	83,3	456,0	358,4	399,0	412,5	281,5	641,0	0,19	73,91	72,76	72,03	0,19	73,73	73,35	74,60
90,0	274,0	1,9	0,0	9,7	0,0	240,7	68,5	83,2	450,4	358,3	397,9	411,8	281,9	636,7	0,19	73,81	72,78	72,01	0,19	73,69	73,35	74,60
91,0	275,0	1,8	0,0	9,7	0,0	238,7	68,5	82,6	445,0	357,8	396,6	410,9	282,3	634,3	0,19	73,72	72,80	71,97	0,19	73,66	73,36	74,59
92,0	276,0	1,8	0,0	9,6	0,0	236,7	68,5	82,4	439,6	356,8	395,8	408,8	283,1	630,4	0,19	73,60	72,79	71,95	0,19	73,60	73,37	74,54
93,0	277,0	1,8	0,0	9,6	0,0	234,9	68,6	82,0	434,7	357,2	394,4	408,2	283,6	626,8	0,19	73,50	72,79	71,92	0,19	73,54	73,35	74,51
94,0	278,0	1,8	0,0	9,6	0,0	233,2	68,6	81,6	429,9	356,8	393,0	406,9	284,3	624,2	0,19	73,36	72,77	71,89	0,19	73,48	73,36	74,46
95,0	279,0	1,7	0,0	9,7	0,0	231,1	68,6	81,8	425,1	355,9	392,2	405,3	285,0	620,8	0,19	73,22	72,75	71,84	0,19	73,39	73,34	74,42
96,0	280,0	1,7	0,0	9,7	0,0	229,6	68,4	81,2	421,0	356,0	390,3	404,2	285,4	616,6	0,19	73,04	72,72	71,81	0,19	73,30	73,33	74,39
97,0	281,0	1,7	0,0	9,7	0,0	228,0	68,5	81,0	416,6	353,9	389,3	403,2	286,3	614,6	0,19	72,84	72,68	71,79	0,19	73,13	73,31	74,31
98,0	282,0	1,7	0,0	9,8	0,0	226,6	68,4	81,0	412,3	355,4	387,9	401,8	286,7	610,0	0,19	72,74	72,66	71,77	0,19	73,04	73,29	74,25
99,0	283,0	1,7	0,0	9,8	0,0	224,7	68,5	80,7	408,4	353,7	387,2	400,3	287,5	609,8	0,19	72,68	72,61	71,74	0,19	72,97	73,28	74,23
100,0	284,0	1,6	0,0	9,9	0,0	223,5	68,4	80,3	404,6	353,1	385,9	399,0	288,0	606,7	0,19	72,62	72,59	71,69	0,19	72,92	73,28	74,16
101,0	285,0	1,6	0,0	10,0	0,0	221,9	68,4	80,5	401,2	353,5	384,2	398,1	288,3	604,9	0,19	72,53	72,58	71,67	0,19	72,81	73,25	74,12
102,0	286,0	1,6	0,0	9,9	0,0	220,9	68,4	80,2	398,0	352,9	383,8	396,2	289,3	601,0	0,19	72,47	72,57	71,63	0,19	72,72	73,22	74,08
103,0	287,0	1,6	0,0	10,0	0,0	219,3	68,4	80,0	394,8	351,7	382,7	395,2	290,0	597,7	0,19	72,47	72,55	71,62	0,19	72,72	73,22	74,02
104,0	288,0	1,6	0,0	10,1	0,0	217,8	68,4	79,8	391,8	351,7	381,6	394,1	290,5	597,5	0,19	72,42	72,52	71,55	0,19	72,67	73,21	73,95
105,0	289,0	1,5	0,0	10,0	0,0	216,8	68,3	79,9	388,6	351,2	380,0	393,0	291,1	595,8	0,19	72,34	72,49	71,51	0,19	72,59	73,20	73,90
106,0	290,0	1,5	0,0	10,1	0,0	215,6	68,3	79,7	385,5	349,8	379,0	391,8	292,0	594,4	0,19	72,26	72,46	71,48	0,19	72,49	73,18	73,83
107,0	291,0	1,5	0,0	10,1	0,0	214,2	68,2	79,5	382,9	350,7	377,9	390,9	292,5	593,2	0,19	72,14	72,45	71,44	0,19	72,41	73,14	73,77
108,0	292,0	1,5	0,0	10,1	0,0	213,4	68,3	79,2	380,8	350,0	377,1	389,5	292,9	590,6	0,19	72,04	72,40	71,42	0,19	72,30	73,11	73,70
109,0	293,0	1,5	0,0	10,1	0,0	212,5	68,1	79,1	378,5	350,8	376,3	388,7	293,7	590,9	0,19	71,96	72,38	71,38	0,19	72,20	73,09	73,65
110,0	294,0	1,5	0,0	10,1	0,0	211,8	68,2	79,1	376,3	349,8	375,5	387,3	294,2	590,3	0,19	71,86	72,33	71,36	0,19	72,10	73,03	73,59
111,0	295,0	1,4	0,0	10,2	0,0	210,8	68,3	79,1	374,3	349,2	375,2	386,4	294,9	590,9	0,19	71,79	72,30	71,32	0,19	72,06	73,03	73,54
112,0	296,0	1,4	0,0	10,2	0,0	209,8	68,2	78,9	372,2	348,9	373,9	385,5	295,3	592,3	0,19	71,75	72,27	71,29	0,19	72,01	72,99	73,44
113,0	297,0	1,4	0,0	10,2	0,0	209,1	68,2	78,8	370,3	348,4	371,9	385,0	296,0	589,1	0,19	71,74	72,27	71,23	0,19	72,00	72,98	73,39
114,0	298,0	1,4	0,0	10,2	0,0	208,9	68,0	78,7	368,4	347,2	371,8	383,7	296,8	591,1	0,19	71,71	72,25	71,22	0,19	71,93	72,97	73,34
115,0	299,0	1,4	0,0	10,2	0,0	208,3	67,9	78,8	366,5	346,7	370,8	382,5	297,2	589,8	0,19	71,62	72,21	71,20	0,19	71,87	72,93	73,30
116,0	300,0	1,4	0,0	10,2	0,0	206,9	68,0	78,9	365,0	346,8	369,9	382,1	297,7	583,2	0,19	71,58	72,18	71,18	0,19	71,82	72,92	73,24
117,0	301,0	1,3	0,0	10,3	0,0	206,2	67,8	78,3	363,6	345,6	369,1	380,4	298,4	578,3	0,19	71,54	72,16	71,15	0,19	71,76	72,89	73,17
118,0	302,0	1,3	0,0	10,3	0,0	205,8	68,1	78,3	361,9	345,6	368,8	380,1	298,8	577,4	0,19	71,50	72,15	71,11	0,19	71,76	72,86	73,13
119,0	303,0	1,3	0,0	10,3	0,0	205,7	67,9	78,5	360,4	345,0	367,1	379,1	299,2	577,7	0,19	71,49	72,15	71,10	0,19	71,74	72,85	73,09
120,0	304,0	1,3	0,0	10,3	0,0	205,3	68,0	77,7	358,8	343,0	366,5	378,7	299,8	577,4	0,19	71,47	72,12	71,06	0,19	71,71	72,84	73,03
121,0	305,0	1,3	0,0	10,2	0,0	204,8	68,0	78,4	357,5	344,1	365,0	378,3	300,0	577,4	0,19	71,54	72,12	71,01	0,19	71,72	72,80	72,99
122,0	306,0	1,3	0,0	10,3	0,0	204,2	68,2	78,1	356,4	342,0	365,6	377,2	301,0	575,5	0,19	71,56	72,13	71,00	0,19	71,77	72,82	72,95
123,0	307,0	1,2	0,0	10,2	0,0	203,8	68,3	78,0	354,7	342,0	363,6	377,0	301,3	577,4	0,19	71,51	72,13	70,94	0,19	71,80	72,82	72,91
124,0	308,0	1,2	0,0	10,3	0,0	203,5	68,3	78,1	353,9	341,1	363,3	376,6	301,8	579,3	0,19	71,48	72,13	70,94	0,19	71,80	72,81	72,89
125,0	309,0	1,2	0,0	10,3	0,0	203,4	68,5	78,3	352,7	340,6	363,6	376,0	302,3	577,5	0,19	71,44	72,11	70,92	0,19	71,78	72,78	72,87
126,0	310,0	1,2	0,0	10,3	0,0	202,4	68,3	78,1	351,3	340,5	362,0	375,1	302,8	577,5	0,19	71,42	72,09	70,86	0,19	71,75	72,78	72,81
127,0	311,0	1,2	0,0	10,3	0,0	202,1	68,5	77,9	350,6	339,2	362,2	374,6	303,3	578,7	0,19	71,36	72,06	70,85	0,19	71,71	72,76	72,81
128,0	312,0	1,1	0,0	10,3	0,0	201,9	68,6	78,2	349,7	338,4	361,2	373,8	303,8	579,8	0,19	71,40	72,08	70,85	0,19	71,75	72,77	72,76
129,0	313,0	1,1	0,0	10,2	0,0	202,5	68,7	78,1	348,7	338,3	360,7	373,2	304,1	580,5	0,19	71,38	72,05	70,80	0,19	71,72	72,74	72,75
130,0	314,0	1,1	0,0	10,2	0,0	202,1	68,5	78,3	347,8	337,6	359,9	373,0	304,7	579,6	0,19	71,38	72,04	70,77	0,19	71,71	72,73	72,70
131,0	315,0	1,1	0,0	10,3	0,0	201,7	68,6	78,2	347,0	336,3	359,1	372,2	305,0	581,3	0,19	71,33	72,02	70,77	0,19	71,71	72,73	72,70
132,0	316,0	1,1	0,0	10,3	0,0	201,8	68,6	77,9	345,9	336,1	358,5	371,9	305,4	582,3	0,19	71,36	72,03	70,76	0,19	71,69	72,71	72,68
133,0	317,0	1,0	0,0	10,3	0,0	201,4	68,6	77,8	345,4	335,6	359,0	370,9	306,0	581,0	0,19	71,35	72,02	70,73	0,19	71,72	72,71	72,66
134,0	318,0	1,0	0,0	10,2	0,0	201,5	68,3	77,9	344,4	335,7	357,1	370,5	306,1	578,4	0,19	71,37	72,01	70,70	0,19	71,71	72,70	72,63
135,0	319,0	1,0	0,0	9,5	0,0	201,2	68,4	77,9	343,6	334,2	356,3	369,7	306,8	575,1	0,19	71,32	71,98	70,69	0,19	71,67	72,69	72,61
136,0	320,0	1,0	0,0	9,3	0,0	201,4	68,2	77,8	342,4	334,4	355,8	369,2	307,3	575,5	0,19	71,24	71,94	70,66	0,19	71,63	72,67	72,58
137,0	321,0	1,0	0,0	9,1	0,0	200,8	68,3	77,9	341,3	333,2	355,5	368,9	307,9	573,5	0,19	71,17	71,92	70,63	0,19	71,59	72,65	72,58
138,0	322,0	1,0	0,0	9,2	0,0	200,9	68,3	77,8	340,0	333,1	354,7	367,7	308,5	574,4	0,19	71,14	71,90	70,59	0,19	71,54	72,65	72,53
139,0	323,0	1,0	0,0	9,2	0,0	200,4	68,4	77,8	338,9	331,8	353,7	367,4	308,8	574,3	0,19	71,14	71,88	70,57	0,19	71,56	72,62	72,51
140,0	324,0	0,9	0,0	9,2	0,0	199,9	68,2	77,5	338,0	330,8	353,8	366,7	309,4	575,7	0,19	71,15	71,88	70,56	0,19	71,57	72,61	72,48
141,0	325,0	0,9	0,0	9,1	0,0	199,5	68,2	77,6	336,7	330,3	352,6	365,9	310,1	576,5	0,19	71,09	71,85	70,53	0,19	71,52	72,61	72,46
142,0	326,0	0,9	0,0	9,1	0,0	199,3	68,1	77,5	336,1	328,9	352,6	365,0	310,8	574,7	0,19	71,04	71,80	70,51	0,19	71,47	72,59	72,44
143,0	327,0	0,9	0,0	9,1	0,0	198,9	68,2	77,7	335,1	327,7	351,3	363,2	311,4	574,5	0,19	71,02	71,80	70,46	0,19	71,45	72,57	72,42
144,0	328,0	0,9	0,0	9,1	0,0	199,3	68,0	77,3	333,9	327,2	350,6	363,3	312,1	575,2	0,19	71,04	71,79	70,45	0,19	71,45	72,56	72,37
145,0	329,0	0,9	0,0	9,1	0,0	198,9	68,1	77,5	332,9	326,8	349,6	362,5	312,5	575,9	0,19	71,04	71,79	70,44	0,19	71,44	72,54	72,36
146,0	330,0	0,9	0,0	9,1	0,0	198,5	68,1	77,6	331,9	325,2	349,0	361,6	313,0	576,2	0,19	71,01	71,77	70,42	0,19	71,45	72,54	72,33
147,0	331,0	0,8	0,0	9,2	0,0	198,2	68,2	77,5	331,1	324,0	348,6	360,8	313,6	575,7	0,19	70,96	71,75	70,38	0,19	71,40	72,51	72,31
148,0	332,0	0,8	0,0	9,2	0,0	198,0	68,0	77,4	330,3	323,3	347,4	359,9	314,1	576,3	0,19	70,89	71,72	70,37	0,19	71,35	72,50	72,28
149,0	333,0	0,8	0,0	9,2	0,0	197,8	68,0	77,1	329,5	321,4	346,8	359,0	314,7	577,0	0,19	70,84	71,68	70,36	0,19	71,31	72,47	72,26
150,0	334,0	0,8	0,0	9,2	0,0	197,9	68,2	77,1	329,0	320,8	346,3	358,0	315,2	575,4	0,19	70,85	71,68	70,32	0,19	71,31	72,45	72,24
151,0	335,0	0,8	0,0	9,2	0,0	197,4	68,2	77,3	328,1	318,9	346,1	357,2	315,6	575,4	0,19	70,85	71,67	70,33	0,19	71,29	72,43	72,21
152,0	336,0	0,8	0,0	9,2	0,0	197,0	68,2	77,4	327,2	318,4	344,6	356,4	316,1	576,4	0,19	70,90	71,66	70,28	0,19	71,29	72,42	72,19
153,0	337,0	0,8	0,0	9,3	0,0	196,5	67,9	77,3	326,8	317,4	343,8	355,9	316,2	574,2	0,19	70,86	71,65	70,30	0,19	71,28	72,42	72,20
154,0	338,0	0,7	0,0	9,3	0,0	196,7	68,1	77,3	326,1	315,1	343,3	354,6	316,7	573,6	0,19	70,78	71,62	70,27	0,19	71,24	72,38	72,16
155,0	339,0	0,7	0,0	9,4	0,0	196,2	67,9	77,2	325,6	314,9	342,6	353,9	317,3	572,4	0,19	70,72	71,57	70,21	0,19	71,20	72,36	72,16
156,0	340,0	0,7	0,0	9,2	0,0	195,9	67,8	77,0	324,9	314,1	342,4	353,0	317,6	569,9	0,19	70,67	71,56	70,20	0,19	71,14	72,35	72,13
157,0	341,0	0,7	0,0	9,3	0,0	195,9	68,0	77,1	324,3	313,0	342,0	352,1	318,0	570,4	0,19	70,66	71,55	70,20	0,19	71,12	72,33	72,13
158,0	342,0	0,7	0,0	9,3	0,0	195,6	67,8	77,1	323,5	313,4	340,8	351,3	318,1	570,5	0,19	70,68	71,53	70,19	0,19	71,14	72,32	72,09
159,0	343,0	0,7	0,0	9,3	0,0	195,2	67,6	76,9	322,9	311,4	340,5	350,7	318,5	571,3	0,19	70,69	71,53	70,16	0,19	71,14	72,32	72,09
160,0	344,0	0,7	0,0	9,3	0,0	195,5	67,9	76,8	322,2	310,6	339,5	350,1	318,8	573,6	0,19	70,66	71,51	70,15	0,19	71,11	72,30	72,06
161,0	345,0	0,6	0,0	9,5	0,0	195,4	67,8	76,9	321,7	308,8	339,5	349,3	319,1	576,8	0,19	70,66	71,49	70,12	0,19	71,11	72,28	72,03
162,0	346,0	0,6	0,0	9,7	0,0	195,0	67,9	76,9	321,1	307,9	338,8	348,4	319,2	573,4	0,19	70,67	71,50	70,10	0,19	71,12	72,29	72,03
163,0	347,0	0,6	0,0	9,7	0,0	194,7	68,0	77,0	320,6	306,9	338,4	347,8	319,4	571,4	0,19	70,72	71,48	70,10	0,19	71,13	72,27	72,02
164,0	348,0	0,6	0,0	9,6	0,0	194,7	67,9	76,8	320,0	306,5	337,7	347,0	319,7	568,3	0,19	70,72	71,48	70,07	0,19	71,14	72,26	71,98
165,0	349,0	0,6	0,0	9,5	0,0	194,0	68,1	76,9	319,2	305,4	337,1	346,2	320,1	567,4	0,19	70,73	71,47	70,05	0,19	71,14	72,25	71,96
166,0	350,0	0,6	0,0	9,5	0,0	193,9	68,1	76,7	319,1	305,2	337,1	345,8	320,1	566,6	0,19	70,74	71,46	70,03	0,19	71,16	72,26	71,96
167,0	351,0	0,6	0,0	9,4	0,0	194,1	68,0	76,6	318,4	305,1	335,9	345,1	320,6	567,3	0,19	70,72	71,44	70,04	0,19	71,16	72,26	71,94
168,0	352,0	0,5	0,0	9,4	0,0	193,9	68,0	76,8	317,9	304,4	336,2	344,7	321,0	565,3	0,19	70,68	71,40	70,04	0,19	71,13	72,23	71,93
169,0	353,0	0,5	0,0	9,4	0,0	193,4	68,0	76,6	317,5	303,2	335,2	344,2	321,4	568,1	0,19	70,62	71,38	70,00	0,19	71,10	72,22	71,89
170,0	354,0	0,5	0,0	9,4	0,0	193,7	68,2	76,6	316,9	301,7	334,7	343,8	321,6	567,4	0,19	70,59	71,36	69,99	0,19	71,08	72,18	71,87
171,0	355,0	0,5	0,0	9,3	0,0	193,5	68,2	76,7	316,7	302,0	334,2	342,9	321,9	568,9	0,19	70,63	71,37	69,94	0,19	71,08	72,17	71,87
172,0	356,0	0,5	0,0	9,3	0,0	193,3	68,2	76,7	316,4	301,1	334,0	342,5	322,2	567,3	0,19	70,66	71,37	69,95	0,19	71,07	72,20	71,86
173,0	357,0	0,5	0,0	9,3	0,0	193,2	68,2	75,9	315,4	300,9	333,3	341,4	322,4	567,8	0,19	70,66	71,37	69,95	0,19	71,09	72,16	71,83
174,0	358,0	0,5	0,0	9,1	0,0	193,2	68,0	76,4	315,3	300,1	333,1	341,2	322,8	565,3	0,19	70,72	71,35	69,92	0,19	71,12	72,15	71,81
175,0	359,0	0,4	0,0	9,1	0,0	192,8	68,1	76,5	314,8	299,6	332,4	341,0	322,9	567,4	0,19	70,65	71,32	69,93	0,19	71,08	72,13	71,79
176,0	360,0	0,4	0,0	9,0	0,0	192,4	67,9	76,6	314,8	298,5	332,6	340,1	323,3	567,1	0,19	70,60	71,31	69,89	0,19	71,06	72,13	71,76
177,0	361,0	0,4	0,0	9,1	0,0	192,5	67,8	76,5	314,2	299,0	331,7	339,8	323,6	568,9	0,19	70,53	71,27	69,90	0,19	71,00	72,10	71,74
178,0	362,0	0,4	0,0	9,1	0,0	192,9	67,7	76,4	314,1	297,7	331,3	339,0	323,4	570,5	0,19	70,47	71,25	69,89	0,19	70,96	72,09	71,72
179,0	363,0	0,4	0,0	9,2	0,0	192,7	67,8	76,1	313,6	296,4	331,0	338,3	323,5	571,3	0,19	70,43	71,24	69,88	0,19	70,91	72,05	71,70
180,0	364,0	0,4	0,0	9,1	0,0	192,7	67,8	76,4	313,4	296,9	330,4	337,7	323,5	571,9	0,19	70,42	71,23	69,87	0,19	70,92	72,05	71,69
181,0	365,0	0,4	0,0	9,2	0,0	192,6	67,8	76,3	313,1	295,4	329,5	337,5	323,6	575,5	0,19	70,46	71,24	69,84	0,19	70,95	72,04	71,69

182,0	366,0	0,4	0,0	9,2	0,0	193,2	67,9	76,3	312,8	294,3	328,7	337,0	323,8	577,2	0,19	70,45	71,23	69,83	0,19	70,96	72,02	71,67
183,0	367,0	0,3	0,0	9,2	0,0	193,0	67,8	76,2	312,7	293,8	328,4	336,0	323,8	580,0	0,19	70,48	71,22	69,83	0,19	70,94	72,03	71,65
184,0	368,0	0,3	0,0	9,2	0,0	193,6	68,0	76,3	312,4	292,6	327,8	336,0	324,2	582,2	0,19	70,43	71,20	69,84	0,19	70,88	72,00	71,63
185,0	369,0	0,3	0,0	9,2	0,0	194,1	67,7	76,3	312,1	291,2	328,2	335,2	324,4	583,6	0,19	70,44	71,20	69,81	0,19	70,88	71,99	71,64
186,0	370,0	0,3	0,0	9,1	0,0	194,6	67,9	76,3	311,8	290,1	327,7	334,7	324,6	586,9	0,19	70,46	71,18	69,80	0,19	70,87	71,97	71,62
187,0	371,0	0,3	0,0	9,1	0,0	194,5	67,8	76,2	311,9	288,8	327,7	333,7	324,7	588,0	0,19	70,41	71,14	69,80	0,19	70,84	71,94	71,58
188,0	372,0	0,3	0,0	9,0	0,0	194,8	67,9	76,2	311,7	288,1	326,9	333,5	324,9	590,6	0,19	70,40	71,15	69,79	0,19	70,83	71,94	71,56
189,0	373,0	0,3	0,0	9,0	0,0	195,0	67,7	76,4	311,4	288,7	325,8	332,6	324,6	592,5	0,19	70,38	71,13	69,77	0,19	70,83	71,93	71,55
190,0	374,0	0,2	0,0	9,0	0,0	195,5	67,6	76,5	311,6	287,3	326,0	332,0	324,6	594,6	0,19	70,33	71,12	69,79	0,19	70,80	71,92	71,54
191,0	375,0	0,2	0,0	8,9	0,0	195,8	67,7	76,2	311,1	286,8	325,2	331,7	324,8	591,8	0,19	70,28	71,07	69,76	0,19	70,74	71,90	71,53
192,0	376,0	0,2	0,0	8,8	0,0	196,1	67,7	76,1	311,0	284,8	325,6	331,1	324,5	589,2	0,19	70,25	71,06	69,75	0,19	70,72	71,86	71,50
193,0	377,0	0,2	0,0	8,7	0,0	195,7	67,8	76,3	310,9	284,5	325,0	330,4	324,4	587,0	0,19	70,27	71,08	69,74	0,19	70,72	71,84	71,48
194,0	378,0	0,2	0,0	8,6	0,0	195,6	67,6	76,5	310,5	283,7	324,9	329,9	324,6	588,8	0,19	70,34	71,04	69,72	0,19	70,75	71,83	71,47
195,0	379,0	0,2	0,0	8,6	0,0	196,0	67,6	76,0	310,4	282,2	324,0	329,5	324,2	589,0	0,19	70,38	71,03	69,73	0,19	70,76	71,80	71,42
196,0	380,0	0,2	0,0	8,6	0,0	195,4	67,6	76,2	310,2	282,0	323,9	328,1	324,2	589,9	0,19	70,33	71,03	69,70	0,19	70,72	71,80	71,44
197,0	381,0	0,2	0,0	8,5	0,0	195,9	67,5	76,3	309,8	281,8	323,6	328,1	324,2	586,0	0,19	70,31	71,01	69,68	0,19	70,74	71,78	71,42
198,0	382,0	0,2	0,0	7,9	0,0	195,4	67,5	76,1	309,4	281,5	322,8	327,3	324,2	569,7	0,19	70,27	71,01	69,67	0,19	70,70	71,79	71,41
199,0	383,0	0,1	0,0	7,8	0,0	194,1	67,5	76,0	308,6	280,1	322,8	326,9	324,1	555,5	0,19	70,25	70,97	69,69	0,19	70,66	71,75	71,39
200,0	384,0	0,1	0,0	7,9	0,0	192,4	67,3	76,2	307,9	280,5	322,3	325,9	324,0	548,0	0,19	70,28	70,96	69,68	0,19	70,65	71,71	71,38
201,0	385,0	0,1	0,0	8,0	0,0	191,4	67,3	76,0	307,0	279,7	322,1	325,5	324,0	544,0	0,19	70,20	70,94	69,69	0,19	70,63	71,71	71,37
202,0	386,0	0,1	0,0	7,9	0,0	190,6	67,4	75,9	306,2	278,5	321,2	325,1	323,8	538,9	0,19	70,21	70,92	69,65	0,19	70,59	71,67	71,34
203,0	387,0	0,1	0,0	7,9	0,0	189,6	67,6	75,9	305,1	278,1	321,3	324,0	324,4	536,5	0,19	70,27	70,93	69,64	0,19	70,62	71,67	71,32
204,0	388,0	0,1	0,0	7,9	0,0	188,3	67,6	76,8	304,2	277,9	320,7	323,8	324,5	535,1	0,19	70,39	70,93	69,65	0,19	70,70	71,68	71,38
205,0	389,0	0,1	0,0	7,9	0,0	187,3	68,0	77,7	303,4	276,2	320,6	322,9	324,9	534,6	0,19	70,63	70,97	69,66	0,19	70,82	71,69	71,43
206,0	390,0	0,1	0,0	7,9	0,0	186,5	68,4	78,7	302,3	275,5	319,7	322,7	325,0	533,2	0,19	70,91	71,04	69,66	0,19	71,04	71,75	71,50
207,0	391,0	0,1	0,0	8,1	0,0	185,4	68,6	79,7	301,3	274,2	319,9	322,4	325,3	531,6	0,19	71,18	71,12	69,71	0,19	71,23	71,82	71,61
208,0	392,0	0,1	0,0	8,0	0,0	184,7	68,8	79,5	300,4	274,0	318,7	321,9	325,4	532,8	0,19	71,46	71,19	69,75	0,19	71,44	71,92	71,69
209,0	393,0	0,0	0,0	8,0	0,0	184,2	69,0	78,8	299,2	273,3	317,9	321,2	325,3	532,8	0,19	71,66	71,27	69,79	0,19	71,61	71,97	71,77

SFBA EPA EMISSION RESULTS

Test Duration: **209** min

PRESSURE FACTOR:	DGM 1	0,97811	
	DGM 2	0,98466	
	DGM 3	1,00621	
TEMPERATURE FACTORS	DGM 1	0,99285	
	DGM 2	0,99204	
	DGM 3	0,99981	
VOLUMES SAMPLED	DGM 1	39,505	SCft
	DGM 2	38,421	Scft
	DGM 3	52,562	SCft

TOTAL TUNNEL VOLUME : 36753

SAMPLE RATIOS

Sample Train 1:	930,345
Sample Train 2:	956,611

Paticulate concentration

Sample Train 1	**0,000046**	g/dscf
Sample Train 2	**0,000044**	g/dscf
Room	**0,000002**	g/dscf

TOTAL EMISSIONS

Sample Train 1	**1,60**	g
Sample Train 2	**1,56**	g

EMISSION RATES

Sample Train 1	**0,46**	g/hr
Sample Train 2	**0,45**	g/hr

1st hour emission rate **1,40** g/hr

	Train 1	Train 2
Cs	4,556E-05	4,42472E-05

RESULTS

Average emission rate: 0,5 g/hr

Burn Rate : 1,029 Dry kg/hr

BAROMETRIC PRESSURE

Average:	30,105824	in Hg
Start:	30,150119	in Hg
End:	30,061529	in Hg

DGM CONTROLLER VALUES

DGM 1	Final:	30932,826	Cuft
	Initial:	30892,187	Cuft
DGM 2	Final:	29165,222	Cuft
	Initial:	29125,384	Cuft
DGM #3	Final:	582,920	Cuft
	Initial:	530,450	Cuft

TEMPERATURES

DGM 1	531,802	°R
DGM 2	532,235	°R

CALIBRATION FACTORS

DGM 1	1,0010
DGM 2	0,9873
DGM #3	0,9958

TUNNEL FLOW RATE: 175,854 Dscfm

PARTICULATE CATCH

Total Sample Train 1:	1,80	mg
Total Sample Train 2:	1,70	mg
Total Sample Train 1 1st hour:	1,50	mg

DEVIATION: 1,53%

Manufacturer: HEARTHSTONE
Model: GM40

Run: 1
Project #: PI 20189
Test Duration: 209 min

Note: In the "Input data", "Calc. % O_2", "Fuel Properties", and "Mass Balance" columns, [e], [d], [g], [a]. [b], [c], [h], [u], [w], [j], and [k] refer to their respective variables in Clauses

	HHV	LHV
Eff	80,83%	87,36%
Comb Eff	98,12%	98,12%
HT Eff	82,38%	89,04%
Output	16 487	kJ/h
Burn Rate	1,03	kg/h
Grams CO	102	g
Input	20 397	kJ/h
MC wet	16,93	

Ultimate CO_2
$CO_{2\text{-ult}}$ 19,64
F_0
1,062

Overall Heating Efficiency: 80,83%
Combustion Efficiency: 98,12%
Heat Transfer Efficiency: 82,38%

Heat Output: 15 640 Btu/h
Heat Input: 19 348 Btu/h
Burn Duration: 3,48 h
Burn Rate: 2,27 lb/h
Stack Temp: 243,3 Deg. F

Averages	0,17	11,15	0,98	20,19	8,96	117,41	20,06	99,5%	83,2%	82,8%
INPUT DATA			Oxygen Calculation			Input Data		Combust	Heat	Net
Elapsed Time	Weight Remaining (kg)	% CO [e]	% CO_2 [d]	Excess Air EA	Total O_2	Calc. % O_2 [g]	Flue Gas (ºC)	Room Temp (ºC)	Eff %	Transfer %	Eff %
0,00	4,32	0,19	3,50	432,5%	20,70	17,10	128,5	20,1	97,1%	70,3%	68,2%
1,00	4,26	0,13	1,47	1125,9%	20,83	19,30	128,4	20,1	96,6%	46,1%	44,5%
2,00	4,26	0,01	3,50	458,8%	20,71	17,20	135,3	20,1	101,2%	69,1%	69,9%
3,00	4,22	0,00	4,39	347,0%	20,65	16,26	142,7	20,1	101,0%	72,0%	72,7%
4,00	4,17	0,00	5,76	240,8%	20,56	14,80	149,3	20,0	100,7%	75,1%	75,7%
5,00	4,17	0,00	7,34	167,5%	20,46	13,11	142,6	20,1	100,5%	78,6%	79,0%
6,00	4,13	0,00	5,24	274,9%	20,59	15,35	126,3	20,1	100,8%	76,7%	77,3%
7,00	4,13	0,00	5,42	262,3%	20,58	15,16	120,0	20,1	100,8%	77,9%	78,5%
8,00	4,08	0,00	5,22	275,9%	20,60	15,37	116,3	20,1	100,8%	77,9%	78,6%
9,00	4,08	0,00	5,19	278,5%	20,60	15,41	114,6	20,0	100,9%	78,0%	78,7%
10,00	4,04	0,00	5,45	260,3%	20,58	15,13	113,8	20,0	100,8%	78,7%	79,3%
11,00	4,04	0,00	5,73	242,8%	20,56	14,83	113,6	20,1	100,7%	79,2%	79,8%
12,00	3,99	0,00	6,12	220,7%	20,54	14,41	114,6	19,9	100,7%	79,7%	80,2%
13,00	3,95	0,00	6,26	213,9%	20,53	14,27	118,6	19,9	100,7%	79,4%	80,0%
14,00	3,90	0,00	11,51	70,6%	20,18	8,67	125,8	19,9	100,2%	83,3%	83,4%
15,00	3,86	0,44	16,25	17,7%	19,84	3,37	130,3	19,8	97,8%	84,5%	82,7%
16,00	3,81	0,03	13,63	43,9%	20,04	6,40	133,3	19,8	100,0%	83,7%	83,7%
17,00	3,76	0,01	13,93	40,9%	20,02	6,09	135,4	19,8	100,1%	83,7%	83,8%
18,00	3,67	0,01	13,04	50,6%	20,08	7,04	138,3	19,9	100,1%	83,2%	83,3%
19,00	3,63	0,01	14,04	39,9%	20,01	5,97	142,2	19,9	100,1%	83,4%	83,5%
20,00	3,58	0,00	14,31	37,3%	20,00	5,69	144,9	19,8	100,1%	83,3%	83,4%
21,00	3,54	0,00	14,78	32,8%	19,96	5,18	146,1	19,7	100,1%	83,4%	83,5%
22,00	3,45	0,00	14,71	33,5%	19,97	5,25	147,3	19,7	100,1%	83,3%	83,4%
23,00	3,40	0,00	14,63	34,2%	19,97	5,34	150,7	19,7	100,1%	83,1%	83,2%
24,00	3,36	0,27	16,71	15,7%	19,82	2,97	154,2	19,8	98,7%	83,6%	82,5%
25,00	3,27	0,51	16,76	13,7%	19,80	2,78	156,0	19,7	97,5%	83,4%	81,4%
26,00	3,22	0,13	16,49	18,2%	19,84	3,29	157,4	19,7	99,4%	83,4%	82,9%
27,00	3,18	0,05	15,69	24,8%	19,90	4,18	158,4	19,7	99,8%	83,1%	83,0%
28,00	3,13	0,01	15,21	29,1%	19,93	4,72	159,0	19,7	100,0%	82,9%	82,9%
29,00	3,04	0,01	15,49	26,7%	19,92	4,42	159,8	19,7	100,0%	83,0%	83,0%
30,00	2,99	0,09	16,53	18,2%	19,84	3,27	162,3	19,7	99,6%	83,2%	82,9%
31,00	2,95	0,85	17,31	8,2%	19,74	2,01	164,0	19,6	96,1%	83,1%	79,8%
32,00	2,86	1,01	17,32	7,2%	19,73	1,91	165,5	19,6	95,4%	83,0%	79,2%
33,00	2,81	1,37	17,22	5,7%	19,71	1,81	166,3	19,7	93,8%	82,8%	77,7%
34,00	2,72	1,41	17,21	5,5%	19,71	1,80	167,5	19,7	93,7%	82,7%	77,5%
35,00	2,68	1,42	17,26	5,2%	19,71	1,74	168,0	19,7	93,6%	82,7%	77,5%
36,00	2,63	1,56	17,21	4,7%	19,70	1,71	168,8	19,7	93,0%	82,6%	76,9%
37,00	2,54	1,70	17,24	3,7%	19,69	1,60	169,4	19,8	92,5%	82,6%	76,4%
38,00	2,49	1,82	17,22	3,1%	19,68	1,55	169,1	20,0	92,0%	82,6%	76,0%
39,00	2,45	1,94	17,20	2,6%	19,68	1,50	169,1	20,1	91,5%	82,5%	75,5%
40,00	2,40	1,98	17,21	2,4%	19,67	1,47	168,5	20,2	91,4%	82,6%	75,4%
41,00	2,31	1,83	17,24	3,0%	19,68	1,53	167,7	20,3	92,0%	82,7%	76,0%
42,00	2,27	1,57	17,32	4,0%	19,69	1,59	167,7	20,4	93,1%	82,8%	77,0%
43,00	2,22	1,51	17,39	3,9%	19,69	1,55	168,0	20,3	93,3%	82,8%	77,2%
44,00	2,18	1,26	17,35	5,6%	19,71	1,73	167,3	20,2	94,3%	82,9%	78,2%
45,00	2,13	0,87	17,32	8,0%	19,74	1,98	166,5	20,2	96,0%	83,0%	79,7%
46,00	2,09	0,39	17,17	11,8%	19,78	2,41	165,6	20,4	98,1%	83,2%	81,6%
47,00	2,04	0,24	17,09	13,4%	19,80	2,59	165,8	20,4	98,9%	83,2%	82,2%
48,00	2,00	0,51	17,58	8,6%	19,75	1,91	166,4	20,4	97,7%	83,2%	81,3%
49,00	1,95	0,65	17,55	7,9%	19,74	1,86	166,6	20,4	97,0%	83,1%	80,7%
50,00	1,91	0,75	17,44	8,0%	19,74	1,92	166,5	20,3	96,5%	83,1%	80,2%
51,00	1,86	0,86	17,42	7,5%	19,73	1,88	166,4	20,4	96,1%	83,0%	79,8%
52,00	1,77	0,95	17,44	6,8%	19,73	1,81	166,4	20,3	95,6%	83,0%	79,4%
53,00	1,72	1,06	17,44	6,2%	19,72	1,75	165,9	20,1	95,2%	83,0%	79,0%
54,00	1,68	0,99	17,37	7,0%	19,73	1,86	165,1	20,3	95,5%	83,1%	79,3%
55,00	1,63	0,86	17,34	7,9%	19,74	1,97	165,0	20,1	96,0%	83,1%	79,8%
56,00	1,59	0,87	17,28	8,2%	19,74	2,03	164,6	20,3	96,0%	83,1%	79,7%
57,00	1,54	0,75	17,29	8,9%	19,75	2,08	164,3	20,2	96,5%	83,1%	80,2%
58,00	1,50	0,57	17,21	10,5%	19,77	2,27	163,9	20,2	97,3%	83,2%	81,0%
59,00	1,45	0,51	17,17	11,1%	19,77	2,35	163,4	20,2	97,6%	83,2%	81,2%
60,00	1,41	0,40	16,99	12,9%	19,79	2,60	162,4	20,2	98,1%	83,2%	81,7%
61,00	1,36	0,30	16,83	14,7%	19,81	2,83	161,6	20,1	98,6%	83,3%	82,1%
62,00	1,36	0,14	16,81	15,9%	19,82	2,94	162,0	20,2	99,4%	83,3%	82,7%
63,00	1,32	0,31	17,26	11,8%	19,78	2,37	162,0	20,1	98,6%	83,4%	82,2%
64,00	1,27	0,19	17,09	13,6%	19,80	2,61	161,3	20,2	99,1%	83,4%	82,6%
65,00	1,23	0,07	16,71	17,0%	19,83	3,08	160,3	20,1	99,7%	83,4%	83,1%
66,00	1,18	0,03	16,33	20,0%	19,86	3,51	158,8	20,2	99,9%	83,3%	83,2%
67,00	1,18	0,01	15,69	25,1%	19,90	4,21	156,5	20,2	100,0%	83,2%	83,3%
68,00	1,13	0,00	15,28	28,5%	19,93	4,65	154,5	20,2	100,1%	83,2%	83,3%
69,00	1,09	0,00	15,08	30,2%	19,94	4,86	152,3	20,1	100,1%	83,2%	83,3%
70,00	1,09	0,00	14,27	37,6%	20,00	5,73	150,0	20,1	100,1%	83,1%	83,2%
71,00	1,04	0,00	13,70	43,4%	20,04	6,34	148,0	20,0	100,1%	82,9%	83,0%
72,00	1,04	0,00	13,27	48,1%	20,06	6,80	146,0	19,9	100,1%	82,9%	83,0%
73,00	1,04	0,00	12,82	53,2%	20,09	7,27	143,9	20,1	100,2%	82,8%	82,9%
74,00	1,00	0,00	12,25	60,4%	20,13	7,88	141,5	20,0	100,2%	82,7%	82,8%
75,00	1,00	0,00	11,84	66,0%	20,16	8,32	139,4	20,0	100,2%	82,6%	82,8%
76,00	1,00	0,00	11,47	71,2%	20,18	8,71	137,6	19,9	100,2%	82,5%	82,7%
77,00	0,95	0,00	11,09	77,1%	20,21	9,11	135,9	20,0	100,2%	82,4%	82,6%
78,00	0,95	0,00	10,89	80,3%	20,22	9,33	134,3	20,0	100,2%	82,4%	82,6%
79,00	0,95	0,00	10,65	84,5%	20,24	9,59	132,1	20,1	100,3%	82,4%	82,6%
80,00	0,91	0,00	10,65	84,5%	20,24	9,59	130,2	20,2	100,3%	82,5%	82,8%
81,00	0,91	0,00	10,60	85,3%	20,24	9,64	128,4	20,3	100,3%	82,7%	82,9%
82,00	0,91	0,00	10,48	87,4%	20,25	9,77	126,4	20,4	100,3%	82,7%	82,9%
83,00	0,91	0,00	10,35	89,8%	20,26	9,91	125,0	20,5	100,3%	82,7%	83,0%
84,00	0,91	0,00	10,18	92,9%	20,27	10,08	123,7	20,5	100,3%	82,7%	83,0%
85,00	0,86	0,00	10,10	94,4%	20,27	10,17	122,3	20,5	100,3%	82,8%	83,0%
86,00	0,86	0,00	9,99	96,6%	20,28	10,29	121,0	20,5	100,3%	82,8%	83,1%
87,00	0,86	0,00	9,87	99,0%	20,29	10,42	119,8	20,3	100,3%	82,8%	83,1%
88,00	0,86	0,00	9,79	100,7%	20,29	10,51	118,6	20,3	100,3%	82,9%	83,1%
89,00	0,86	0,00	9,70	102,4%	20,30	10,60	117,1	20,2	100,3%	82,9%	83,2%
90,00	0,86	0,00	9,71	102,4%	20,30	10,59	116,0	20,3	100,3%	83,0%	83,3%
91,00	0,82	0,00	9,66	103,4%	20,30	10,65	114,8	20,3	100,3%	83,0%	83,3%
92,00	0,82	0,00	9,62	104,1%	20,30	10,68	113,7	20,3	100,3%	83,1%	83,4%

93,00	0,82	0,00	9,62	104,1%	20,30	10,68	112,7	20,3	100,3%	83,2%	83,4%
94,00	0,82	0,00	9,64	103,8%	20,30	10,66	111,8	20,3	100,3%	83,3%	83,5%
95,00	0,77	0,00	9,69	102,7%	20,30	10,61	110,6	20,4	100,3%	83,4%	83,6%
96,00	0,77	0,00	9,65	103,4%	20,30	10,65	109,8	20,2	100,3%	83,4%	83,7%
97,00	0,77	0,00	9,74	101,7%	20,30	10,56	108,9	20,3	100,3%	83,5%	83,8%
98,00	0,77	0,00	9,84	99,7%	20,29	10,45	108,1	20,2	100,3%	83,6%	83,9%
99,00	0,77	0,00	9,84	99,6%	20,29	10,45	107,1	20,3	100,3%	83,7%	83,9%
100,00	0,73	0,00	9,90	98,3%	20,29	10,38	106,4	20,2	100,3%	83,8%	84,0%
101,00	0,73	0,00	9,97	97,0%	20,28	10,31	105,5	20,2	100,3%	83,9%	84,1%
102,00	0,73	0,00	9,94	97,6%	20,28	10,35	105,0	20,2	100,3%	83,9%	84,1%
103,00	0,73	0,00	10,04	95,7%	20,28	10,24	104,1	20,2	100,3%	84,0%	84,2%
104,00	0,73	0,00	10,05	95,4%	20,28	10,22	103,2	20,2	100,3%	84,1%	84,3%
105,00	0,68	0,00	10,00	96,4%	20,28	10,28	102,6	20,1	100,3%	84,1%	84,3%
106,00	0,68	0,00	10,12	94,1%	20,27	10,15	102,0	20,2	100,3%	84,2%	84,4%
107,00	0,68	0,00	10,13	93,8%	20,27	10,14	101,2	20,1	100,3%	84,3%	84,5%
108,00	0,68	0,00	10,12	94,1%	20,27	10,15	100,8	20,1	100,3%	84,3%	84,5%
109,00	0,68	0,00	10,13	93,8%	20,27	10,13	100,3	20,0	100,3%	84,3%	84,5%
110,00	0,68	0,00	10,13	93,8%	20,27	10,14	99,9	20,1	100,3%	84,3%	84,6%
111,00	0,64	0,00	10,18	92,8%	20,27	10,08	99,3	20,1	100,3%	84,4%	84,6%
112,00	0,64	0,00	10,18	92,8%	20,27	10,08	98,8	20,1	100,3%	84,4%	84,7%
113,00	0,64	0,00	10,18	92,8%	20,27	10,08	98,4	20,1	100,3%	84,5%	84,7%
114,00	0,64	0,00	10,23	91,9%	20,26	10,03	98,3	20,0	100,3%	84,5%	84,7%
115,00	0,64	0,00	10,18	92,8%	20,27	10,08	97,9	20,0	100,3%	84,5%	84,7%
116,00	0,64	0,00	10,25	91,6%	20,26	10,01	97,2	20,0	100,3%	84,6%	84,8%
117,00	0,59	0,00	10,33	90,1%	20,26	9,92	96,8	19,9	100,3%	84,6%	84,9%
118,00	0,59	0,00	10,27	91,2%	20,26	9,99	96,6	20,0	100,3%	84,6%	84,9%
119,00	0,59	0,00	10,28	91,0%	20,26	9,98	96,5	19,9	100,3%	84,6%	84,9%
120,00	0,59	0,00	10,30	90,7%	20,26	9,96	96,3	20,0	100,3%	84,7%	84,9%
121,00	0,59	0,00	10,23	91,9%	20,26	10,03	96,0	20,0	100,3%	84,7%	84,9%
122,00	0,59	0,00	10,30	90,6%	20,26	9,96	95,7	20,1	100,3%	84,7%	84,9%
123,00	0,54	0,00	10,23	91,9%	20,26	10,03	95,5	20,2	100,3%	84,7%	84,9%
124,00	0,54	0,00	10,28	91,0%	20,26	9,98	95,3	20,2	100,3%	84,7%	85,0%
125,00	0,54	0,00	10,30	90,7%	20,26	9,96	95,2	20,3	100,3%	84,8%	85,0%
126,00	0,54	0,00	10,32	90,4%	20,26	9,94	94,7	20,2	100,3%	84,8%	85,0%
127,00	0,54	0,00	10,32	90,3%	20,26	9,94	94,5	20,3	100,3%	84,8%	85,0%
128,00	0,50	0,00	10,30	90,7%	20,26	9,96	94,4	20,3	100,3%	84,8%	85,0%
129,00	0,50	0,00	10,23	91,9%	20,26	10,03	94,7	20,4	100,3%	84,8%	85,0%
130,00	0,50	0,00	10,23	91,9%	20,26	10,03	94,5	20,3	100,3%	84,8%	85,0%
131,00	0,50	0,00	10,30	90,6%	20,26	9,96	94,3	20,4	100,3%	84,8%	85,0%
132,00	0,50	0,00	10,28	90,9%	20,26	9,98	94,3	20,3	100,3%	84,8%	85,0%
133,00	0,45	0,00	10,28	90,9%	20,26	9,97	94,1	20,3	100,3%	84,8%	85,0%
134,00	0,45	0,00	10,18	92,8%	20,27	10,08	94,1	20,2	100,3%	84,8%	85,0%
135,00	0,45	0,00	9,46	107,6%	20,32	10,86	94,0	20,2	100,3%	84,5%	84,7%
136,00	0,45	0,00	9,28	111,7%	20,33	11,05	94,1	20,1	100,3%	84,3%	84,6%
137,00	0,45	0,00	9,09	115,9%	20,34	11,24	93,8	20,2	100,3%	84,3%	84,6%
138,00	0,45	0,00	9,16	114,4%	20,33	11,17	93,8	20,1	100,3%	84,3%	84,6%
139,00	0,45	0,00	9,18	114,0%	20,33	11,16	93,6	20,2	100,3%	84,3%	84,6%
140,00	0,41	0,00	9,16	114,4%	20,33	11,17	93,3	20,1	100,3%	84,3%	84,6%
141,00	0,41	0,00	9,13	115,1%	20,34	11,21	93,1	20,1	100,3%	84,3%	84,6%
142,00	0,41	0,00	9,09	116,0%	20,34	11,25	92,9	20,0	100,3%	84,3%	84,6%
143,00	0,41	0,00	9,09	116,0%	20,34	11,24	92,7	20,1	100,3%	84,4%	84,6%
144,00	0,41	0,00	9,11	115,6%	20,34	11,23	92,9	20,0	100,3%	84,3%	84,6%
145,00	0,41	0,00	9,14	114,8%	20,34	11,19	92,7	20,1	100,3%	84,4%	84,7%
146,00	0,41	0,00	9,14	114,7%	20,34	11,19	92,5	20,0	100,3%	84,4%	84,7%
147,00	0,36	0,00	9,19	113,6%	20,33	11,14	92,3	20,1	100,3%	84,4%	84,7%
148,00	0,36	0,00	9,21	113,2%	20,33	11,12	92,2	20,0	100,3%	84,4%	84,7%
149,00	0,36	0,00	9,19	113,6%	20,33	11,14	92,1	20,0	100,3%	84,4%	84,7%
150,00	0,36	0,00	9,19	113,6%	20,33	11,14	92,2	20,1	100,3%	84,4%	84,7%
151,00	0,36	0,00	9,18	114,0%	20,33	11,16	91,9	20,1	100,3%	84,5%	84,7%
152,00	0,36	0,00	9,21	113,2%	20,33	11,12	91,6	20,1	100,3%	84,5%	84,8%
153,00	0,36	0,00	9,29	111,3%	20,33	11,03	91,4	20,0	100,3%	84,5%	84,8%
154,00	0,32	0,00	9,32	110,6%	20,32	11,00	91,5	20,1	100,3%	84,6%	84,8%
155,00	0,32	0,00	9,38	109,3%	20,32	10,94	91,2	19,9	100,3%	84,6%	84,9%
156,00	0,32	0,00	9,23	112,8%	20,33	11,10	91,0	19,9	100,3%	84,5%	84,8%
157,00	0,32	0,00	9,33	110,6%	20,32	11,00	91,1	20,0	100,3%	84,6%	84,9%
158,00	0,32	0,00	9,26	112,1%	20,33	11,07	90,9	19,9	100,3%	84,6%	84,8%
159,00	0,32	0,00	9,34	110,2%	20,32	10,98	90,7	19,8	100,3%	84,6%	84,9%
160,00	0,32	0,00	9,29	111,4%	20,33	11,03	90,8	19,9	100,3%	84,6%	84,9%
161,00	0,27	0,00	9,51	106,6%	20,31	10,80	90,8	19,9	100,3%	84,7%	85,0%
162,00	0,27	0,00	9,74	101,7%	20,30	10,56	90,5	19,9	100,3%	84,8%	85,1%
163,00	0,27	0,00	9,71	102,3%	20,30	10,59	90,4	20,0	100,3%	84,8%	85,1%
164,00	0,27	0,00	9,62	104,1%	20,30	10,68	90,4	19,9	100,3%	84,8%	85,0%
165,00	0,27	0,00	9,49	106,9%	20,31	10,82	90,0	20,0	100,3%	84,7%	85,0%
166,00	0,27	0,00	9,54	105,9%	20,31	10,77	90,0	20,1	100,3%	84,8%	85,0%
167,00	0,27	0,00	9,41	108,7%	20,32	10,91	90,0	20,0	100,3%	84,7%	85,0%
168,00	0,23	0,00	9,42	108,3%	20,32	10,89	89,9	20,0	100,3%	84,7%	85,0%
169,00	0,23	0,00	9,42	108,4%	20,32	10,89	89,6	20,0	100,3%	84,7%	85,0%
170,00	0,23	0,00	9,39	109,1%	20,32	10,93	89,8	20,1	100,3%	84,7%	85,0%
171,00	0,23	0,00	9,31	110,9%	20,33	11,01	89,7	20,1	100,3%	84,7%	85,0%
172,00	0,23	0,00	9,31	110,9%	20,33	11,01	89,6	20,1	100,3%	84,7%	85,0%
173,00	0,23	0,00	9,31	110,9%	20,33	11,01	89,5	20,1	100,3%	84,7%	85,0%
174,00	0,23	0,00	9,11	115,5%	20,34	11,22	89,5	20,0	100,3%	84,6%	84,9%
175,00	0,18	0,00	9,14	114,7%	20,34	11,19	89,3	20,0	100,3%	84,6%	84,9%
176,00	0,18	0,00	9,03	117,5%	20,34	11,31	89,1	19,9	100,3%	84,6%	84,9%
177,00	0,18	0,00	9,06	116,7%	20,34	11,28	89,2	19,9	100,3%	84,6%	84,9%
178,00	0,18	0,00	9,11	115,5%	20,34	11,23	89,4	19,8	100,3%	84,6%	84,9%
179,00	0,18	0,00	9,16	114,3%	20,33	11,17	89,3	19,9	100,3%	84,6%	84,9%
180,00	0,18	0,00	9,13	115,1%	20,34	11,21	89,3	19,9	100,3%	84,6%	84,9%
181,00	0,18	0,00	9,23	112,8%	20,33	11,10	89,2	19,9	100,3%	84,7%	84,9%
182,00	0,18	0,00	9,18	113,9%	20,33	11,15	89,6	20,0	100,3%	84,6%	84,9%
183,00	0,14	0,00	9,16	114,3%	20,33	11,17	89,4	19,9	100,3%	84,6%	84,9%
184,00	0,14	0,00	9,21	113,2%	20,33	11,12	89,8	20,0	100,3%	84,6%	84,9%
185,00	0,14	0,00	9,16	114,4%	20,33	11,17	90,0	19,8	100,3%	84,6%	84,8%
186,00	0,14	0,01	9,14	114,7%	20,34	11,19	90,3	20,0	100,3%	84,6%	84,8%
187,00	0,14	0,01	9,13	115,1%	20,34	11,21	90,3	19,9	100,3%	84,5%	84,8%
188,00	0,14	0,01	9,04	117,1%	20,34	11,30	90,4	19,9	100,3%	84,5%	84,8%
189,00	0,14	0,01	8,98	118,6%	20,35	11,37	90,6	19,9	100,3%	84,4%	84,7%
190,00	0,09	0,01	8,99	118,3%	20,35	11,35	90,8	19,8	100,3%	84,4%	84,7%
191,00	0,09	0,00	8,94	119,5%	20,35	11,40	91,0	19,9	100,3%	84,4%	84,7%
192,00	0,09	0,00	8,80	123,2%	20,36	11,56	91,2	19,8	100,3%	84,3%	84,6%
193,00	0,09	0,00	8,68	126,2%	20,37	11,68	91,0	19,9	100,4%	84,3%	84,6%
194,00	0,09	0,00	8,62	127,9%	20,37	11,75	90,9	19,8	100,4%	84,2%	84,5%
195,00	0,09	0,00	8,62	127,9%	20,37	11,75	91,1	19,8	100,4%	84,2%	84,5%
196,00	0,09	0,00	8,58	128,7%	20,37	11,79	90,8	19,8	100,4%	84,2%	84,5%
197,00	0,09	0,00	8,45	132,3%	20,38	11,93	91,0	19,7	100,4%	84,1%	84,4%
198,00	0,09	0,00	7,91	148,4%	20,42	12,51	90,8	19,7	100,4%	83,8%	84,1%
199,00	0,05	0,00	7,82	151,0%	20,42	12,60	90,1	19,7	100,5%	83,8%	84,2%
200,00	0,05	0,00	7,91	148,4%	20,42	12,51	89,1	19,6	100,4%	83,9%	84,3%
201,00	0,05	0,00	7,96	146,9%	20,41	12,46	88,6	19,6	100,4%	84,0%	84,4%
202,00	0,05	0,00	7,89	148,9%	20,42	12,53	88,1	19,6	100,4%	84,0%	84,4%
203,00	0,05	0,00	7,89	148,9%	20,42	12,53	87,6	19,8	100,4%	84,1%	84,4%
204,00	0,05	0,00	7,91	148,4%	20,42	12,51	86,9	19,8	100,5%	84,1%	84,5%
205,00	0,05	0,00	7,92	147,9%	20,42	12,49	86,3	20,0	100,4%	84,2%	84,6%
206,00	0,05	0,00	7,91	148,4%	20,42	12,51	85,8	20,2	100,4%	84,3%	84,6%

207,00	0,05	0,00	8,07	143,3%	20,41	12,33	85,2	20,3	100,4%	84,4%	84,8%
208,00	0,05	0,00	7,96	146,7%	20,41	12,45	84,8	20,5	100,4%	84,4%	84,8%
209,00	0,00	0,00	7,97	146,3%	20,41	12,44	84,5	20,5	100,4%	84,4%	84,8%

POLYTESTS
TESTING THROUGH YOUR REALITY

Date: 2019-03-19 Manufacturer: Hearthstone Model: GM 40

Project #: pt 20189 Run: 2 Tech: MM Reviewer: DP

- kindling 26 LBS start fire
- Fan low
- by pass open
- At 18 LBS close Door
- At 0 LBS insert preload
- At 10 LBS close ~~Door~~ bypass
- At 24 LBS open bypass
- open Door
- ~~crush~~ crush coal bed
- close Door
close bypass
- After 2 min
- open bypass
- open Door
- insert load

TEST LOAD CONFIGURATION

- close door
- close bypass

POLYTESTS
TESTING THROUGH YOUR REALITY

PRE / POST CHECKS

Date: 2019-03-19 Manufacturer: Hearthstone Model: GM 40

Project #: pI 20189 Run: 2 Tech: MM Reviewer: DP

Moisture Meter Calibration Check:

Equipment #	Time	12%	22%
EM-191	7:00	ok	ok

Pre-Test **Post-Test**

Facility Conditions:

	Pre-Test	Post-Test
Air Velocity from less than 2 feet	0 (max50 Fpm)	0 (max50 Fpm)
Smoke Capture Check (tunnel velocity)	ok	NA
Picture (4 sides)	ok	ok

Wood Heater Conditions:

Date Wood Heater Stack Cleaned	2019-03-18
Date Dilution Tunnel Cleaned	2019-03-18
Induced Draft Check (max 0.005 H2O)	ok
Traverse before ignition	ok
Flow Rate 140 cfm ±10%	ok

Temperature System:

Ambient (65°-90°F)	ok °F
Wood Heater Surface (±125°F)	ok °F

Proportional Checks:

Thermocouple check	ok
Pitot Clean	ok
Pitot verification	ok

Sampling Train ID Numbers:

	Train 1st hour	Train 1	Train 2
Probe	12	16	41
Filter Front	43	45	47
Filter Back	44	46	48
Filter Thermocouple	11	11	12
Filter (<90°F)	ok	ok	ok

POLYTESTS
TESTING THROUGH YOUR REALITY

SAMPLING EQUIPMENT CHECK OUT

Date: 2019-03-19 Manufacturer: Hearthstone Model: GM 40

Project #: PT 2189 Run: 2 Tech: MM Reviewer: DP

Leakage Checks Tunnel Samplers

	System 1st hour		System 1		System 2	
Unplugged Flow Rate = .25cfm	Pre-Test ASTM (-15) CSA B415 (-5)	Post-Test (max test)	Pre-Test ASTM (-15) CSA B415 (-5)	Post-Test (Max test)	Pre-Test ASTM (-15) CSA B415 (-5)	Post-Test (Max test)
Vacuum (inches Hg.)	-15	-15	-15	-15	-15	-15
Final 1minute DGM (Liter)	875936.66	876597.95	875936.91	876598.20	825881.30	826533.17
Initial 1minute DGM (Liter)	875936.65	876597.95	875936.90	876598.10	825881.25	826533.16
Change © (Liter)	0.01	0	0.01	0.10	~~0.05~~ 0.05	0.01
Allowable leakage .04 x Sample rate or 0.28Lpm CSA B415 (0.56)						
Check OK	ok	ok	~~ok~~ ok MM	ok	~~ok~~ ok MM	ok

Leakage Checks Flue Gas Sampler

Plugged Probe	Pre Test	Post Test
Vacuum (inches Hg.)	-5	-5
Rotometer Reading (mml/min.)	0	0
Flow Rate (lpm)	1.5	1.5
Allowable (.02 x Sample Rate)	30	30
Check OK	ok	ok

Leakage Checks Pitot

Plugged Probe	Pre Test 3 H2o static	Pre Test 0.4-0.5 H2o velocity	Post Test 3 H2o Static	Post Test 0.4-0.5 H2o velocity
Vacuum (inches Hg.)	3	.5	3	.4
Check OK (no change after 15 sec.)	ok	ok	ok	ok

POLYTESTS
TESTING THROUGH YOUR REALITY

PRE-TEST SCALE AUDIT

Date: 2019-03-19 Manufacturer: Hearthstone Model: GM 40

Project #: pT 2189 Run: 2 Tech: MM Reviewer: DO

Scale Type	Audit		Measured Weight
	Equipment #	Weight	
Platform	EM-090	44 lbs, Class F	44 lbs
Wood	EM-090	44 lbs, Class F	44 lbs
Analytical	EM-128	100 mg, Class S	100 mg
Analytical	EM-129	200 g, Class S	200 g

LIMITS OF WEIGHT RANGES

ANALYTICAL SCALE: ..... 50%-150% of dry filter weight, ± 0.1 mg
PLATFORM SCALE ..... 20%-80% of ideal test load weight, ± 0.1 lbs or 1%
WOOD SCALE ..... 20%-80% of ideal test load weight, ± 0.01 lbs or 1%

POLYTESTS
TESTING THROUGH YOUR REALITY

CONTINUOUS ANALYZERS

Date: 2019-03-19 Manufacturer: Heartstone Model: GM 40

Project #: pI 20189 Run: 2 Tech: M M Reviewer: SP

FOR TUNNELS < 12 in

Barometric pressure (P_{bar}) 102.7 (KPa.) Static pressure (P_q) 0.32 (inches w.c.)
Inside diameter: Port A _____ Port B ____.
Tunnel cross sectional area: .1963Ft^2
Pitot tube type: Standard

Traverse Point	Position (inches)			Velocity Head Δ_p (inches H_2O)	Tunnel Temperature (°F)
	6 po	7 po	8 po		
A- Centroid	3.00	3.50	4	0.063	69.12
B - Centroid	3.00	3.50	4	0.062	68.97
A-1	0.40	0.50	0.50	0.052	69.12
A-2	1.50	1.75	2	0.053	69.17
A-3	4.50	5.25	6	0.055	69.14
A-4	5.60	6.5	7.5	0.052	69.04
B-1	0.40	0.50	0.50	0.054	68.97
B-2	1.50	1.75	2	0.058	69.10
B-3	4.50	5.25	6	~~0.050~~ 0.052 mm	69.34
B-4	5.60	6.5	7.5	0.051	69.55
				AVERAGE	

$$v_s = K_p C_p (\sqrt{\Delta p})_{avg} \sqrt{\frac{(T_s)_{avg}}{P_s M_s}}$$

Where,
C_p = pitot tube coefficient, dimension less = 0.99 for standard pitot.
Δ_p = manometer reading (inches H_2O)
T_s = average absolute dilution tunnel temperature (°F + 460)
P_s = absolute dilution tunnel gas pressure or $P_{bar} + P_{qg}$
P_q = static pressure $\frac{\text{in. } H_2O}{\{\ 13.6\ \}}$
M_s = 28.56, wet molecular weight of stack gas (alternatively, it may be measured)
K_p = 85.49 pitot tube constant, (conversion factor for English units)

$\Delta_p$avg. = average of the square roots of the velocity heads (Δ_p) measured at each traverse point.

POLYTESTS
TESTING THROUGH YOUR REALITY

CONTINUOUS ANALYZERS

Date: 2019-03-19 Manufacturer: Hearthstone Model: GM 90

Project #: PI 20189 Run: 2 Tech: MM Reviewer: DP

Pre-Test (Adjust and Record)

	ZERO		SPAN		CAL. (Record Only)	
CO	0	0	2987	3000	1009	1000
Tolerance CO		+/- 0.02		+/- 0.15		+/- 0.05
CO_2	0	0	17.97	18.00	9.80	10.00
Tolerance CO2		+/- 0.02		+/- 0.5		+/- 0.5
O_2 informative CSA B415 calculated value	na	na	na	na	na	na
	Actual	Should Be	Actual	Should Be	Actual	Should Be

Post Test (Record Only)

	Zero	Span	Cal.	Zero Drift	Limit	Span Drift	Limit	Cal. Drift	Limit	OK?	Not OK*
CO	0	2990	1002	0	0.02	0.003	0.15	0007	0.05	✓	
CO_2	0	1789	977	0	0.02	6.08	0.5	0.03	0.5	✓	

POLYTESTS
TESTING THROUGH YOUR REALITY

TEST DATA LOG

Date: 2019-03-19 Manufacturer: Hearthstone Model: GM 40

Project #: PT 20189 Run: 2 Tech: MM Reviewer: DP

RAW DRY GAS METER READINGS

	System 1	System 2	Blanck
Final (Liter)	876597,46	826532,10	613,34
Initial (Liter)	875936,98	825882,10	582,92

AMBIENT CONDITIONS

	Before	After
Barometer (kPa):	102,7	102,7
Dry Bulb (F):	69,08	70,01
Humidity (%):	18,1	18,4

Flow Meter

	Start	End
Flow meter reading	N.A	N.A

Flow Meter Verification

	Before	After
Flow meter Check (liters)	N.A	N.A
Scale Weight (Kg)	N.A	N.A

POLYTESTS
TESTING THROUGH YOUR REALITY

FUEL DATA

Date: 2019-03-19 Manufacturer: Hearthstone Model: Gm 40

Project #: pI 2018 9 Run: 2 Tech: MM Reviewer: DP

FUEL DESCRIPTION:

Type of wood:

PRE-TEST LOAD

Piece Size	Weight	Meter Moisture Content (% dry)*				
1 1/2 x 3 1/2 x 8 in.	0.930 lbs.	191	196	196	195	194
1 1/2 x 3 1/2 x 8 in.	0.928 lbs.	200	199	197	196	196
1 1/2 x 3 1/2 x 8 in.	0.982 lbs.	191	190	192	192	193
1 1/2 x 3 1/2 x 8 in.	0.706 lbs.	197	193	196	193	194
1 1/2 x 3 1/2 x 8 in.	0.656 lbs.	200	201	200	198	198
1 1/2 x 3 1/2 x 8 in.	0.692 lbs.	192	193	193	192	194
1 1/2 x 3 1/2 x 8 in.	0.700 lbs.	200	206	204	203	204
1 1/2 x 3 1/2 x 8 in.	0.686 lbs.	199	196	197	194	194
1 1/2 x 3 1/2 x 8 in.	0.692 lbs.	193	192	192	193	194
1 1/2 x 3 1/2 x 8 in.	0.700 lbs.	200	206	203	204	203
1 1/2 x 3 1/2 x 8 in.	0.668 lbs.	196	193	193	194	192
1 1/2 x 3 1/2 x 8 in.	0.688 lbs.	193	196	192	193	194
1 1/2 x 3 1/2 x 8 in.	0.758 lbs.	199	196	194	195	196
1 1/2 x 3 1/2 x 8 in.	0.702 lbs.	206	204	203	209	206
x x in.	lbs.					
x x in.	lbs.					
x x in.	lbs.					
x x in.	lbs.					
x x in.	lbs.					
x x in.	lbs.					
x x in.	lbs.					
x x in.	lbs.					
x x in.	lbs.					

TEST LOAD WEIGHT: 10.462 lbs

POLYTESTS
TESTING THROUGH YOUR REALITY

FUEL DATA

Date: 2019-03-19 Manufacturer: Hearthstone Model: GM 40

Project #: pI 20189 Run: 2 Tech: MA Reviewer: DF

FUEL DESCRIPTION:

Type of wood :

TEST LOAD

Piece Size	Weight		Meter Moisture Content (% dry)*				
1 1/2 x 3 1/2 x 13,5 in.	1556	lbs.	20,9	21,1	20,6	21,0	20,8
1 1/2 x 3 1/2 x 13,5 in.	1'404	lbs.	20,8	20,6	20,9	21,1	21,0
1 1/2 x 3 1/2 x 13,5 in.	1357	lbs.	20,4	20,0	20,3	20,4	20,3
1 1/2 x 3 1/2 x 13,5 in.	1'744	lbs.	19,3	19,2	19,6	19,6	19,5
1 1/2 x 3 1/2 x 13,5 in.	1390	lbs.	20,8	20,6	20,9	20,8	20,6
1 1/2 x 3/4 x 5 in.	0128	lbs.			20,1		
1 1/2 x 3/4 x 5 in.	0,120	lbs.			19,3		
1 1/2 x 3/4 x 5 in.	0,120	lbs.			19,6		
1 1/2 x 3/4 x 5 in.	0,116	lbs.			20,4		
1 1/2 x 3/4 x 5 in.	0,122	lbs.			22,3		
1 1/2 x 3/4 x 5 in.	0,120	lbs.			20,0		
1 1/2 x 3/4 x 5 in.	0,112	lbs.			20,1		
1 1/2 x 3/4 x 5 in.	0,122	lbs.			19,3		
1 1/2 x 3/4 x 5 in.	0,126	lbs.			22,4		
1 1/2 x 3/4 x 5 in.	0,122	lbs.			23,0		
1 1/2 x 3/4 x 5 in.	0,146	lbs.			19,9		
1 1/2 x 3/4 x 5 in.	0096	lbs.			20,1		
1 1/2 x 3/4 x 5 in.	0,130	lbs.			21,1		
1 1/2 x 3/4 x 5 in.	0,144	lbs.			21,6		
1 1/2 x 3/4 x 5 in.	~~0,156~~ 0,136	lbs.			21,4		
1 1/2 x 3/4 x 5 in.	0,108	lbs.			21,3		
x x in.		lbs.					
x x in.		lbs.					
x x in.		lbs.					
x x in.		lbs.					
x x in.		lbs.					
x x in.		lbs.					

TEST LOAD WEIGHT: 9422 lbs Min 20%: 1884 Max 25%: 2355

POLYTESTS
TESTING THROUGH YOUR REALITY

DILUTION TUNNEL PARTICULATE SAMPLER DATA

Date: 2019-03-18 Manufacturer: Hearthstone Model: GM 40

Project #: PT 2089 Run: 2 Tech: M M Reviewer: DP

Pre-test Weight Record		SYSTEM 1 – 1st hour				SYSTEM 1				
		Probe & Housing Number	Front Filter Number	Back Filter Number	gaskets	Probe & Housing Number	Front Filter Number	Back Filter Number	gaskets	Blanck
Date	Time	12	43	44	21	16	45	46	29	49
2019-03-18	17:00	94.5388	0.1302	0.1299	34.4861	108.7533	0.1261	0.1309	34.4449	0.1312
2019-03-19	8:00	94.5388	0.1302	0.1300	34.4860	108.7533	0.1262	0.1310	34.4450	0.1312

Post-test Weight Record		SYSTEM 1 – 1st hour				SYSTEM 1				
		Probe & Housing Number	Front Filter Number	Back Filter Number	gaskets	Probe & Housing Number	Front Filter Number	Back Filter Number	gaskets	Blanck
Date	Time	12	43	44	21	16	45	46	29	49
2019-03-19	14:00	94.5395	0.1316	0.1294	34.4895	108.7534	0.1259	0.1314	34.4468	0.1316
2019-04-01	8:00	94.5395	0.1314	0.1291	34.4887	108.7533	0.1257	0.1311	34.4462	0.1315
2019-04-02	8:00	94.5394	0.1314	0.1291	34.4886	108.7533	0.1257	0.1310	34.4461	0.1314

POLYTESTS
TESTING THROUGH YOUR REALITY

DILUTION TUNNEL PARTICULATE SAMPLER DATA

Date: 2019-03-18 Manufacturer: Hearthstone Model: GM 40

Project #: PI 20189 Run: 2 Tech: MM Reviewer: SP

		SYSTEM 2			
Pre-test Weight Record		Probe & Housing Number	Front Filter Number	Back Filter Number	gaskets
Date	Time	41	47	48	44
2019-03-18	17:00	110,3651	0,1277	0,1288	35,3960
2019-03-19	8:00	110,3652	0,1276	0,1288	35,3959	

		SYSTEM 2			
Post-test Weight Record		Probe & Housing Number	Front Filter Number	Back Filter Number	gaskets
Date	Time	41	47	48	44
2019-03-19 MM	14:00	110,3654	0,1291	0,1282	35,3991
2019-04-01	8:00	110,3653	0,1287	0,1279	35,3989
2019-04-02	8:00	110,3654	0,1287	0,1280	35,3990

Paramètres

Tous les facteurs de corrections et autres paramètres qui peuvent être modifiés par l'utilisateur du fichier sont regroupés ici.

Code verrouillage:	HEA

Description du test

Test standard	EPA	
Run #	2	
Date	19-03-2019	
Technicien	M.M	
Project #	PI 20189	

Description de l'unité

Manufacturier	HEARTHSTONE	
Modèle	GM40	
Combustion system	Cat	
Appliance type	WOODSTOVE	
Firebox volume	1,31	cu ft.
Appliance weight empty	N.A	lbs
Appliance weight full	N.A	lbs

Paramètres du test

Logging time	1	min
Manufacturer's rated heat output	N.A	BTU/h Donnée fournie par le manfacturier
Targeted category	1	
Targeted output	N.A	BTU/h
Cp steel	N.A	BTU/lb-°F

Échantillonnage

Blank sampling rate	0,20	cuft/min
Internal probe diameter	0,18	in.
Calibration Factor (DGM #1):	1,001	Dimensionless
Equipment number (DGM #1):	EM 178	
Calibration Factor (DGM #2):	0,987	Dimensionless
Equipment number (DGM #2):	EM 178	
Calibration Factor (DGM #3):	0,996	
Equipment number (DGM #3):	EM 070	Dimensionless

Tunnel

Targeted tunnel flow rate	140	scfm
Tunnel diameter	6	in.
Molecular weight	29	
Pitot tube type	Standard	
Pitot tube coefficient	0,99	Dimensionless

Project nu.	PI 20189
Date	19-03-2019
Technicien	M.M

Fuel data

Fuel type	Dimension		
Fuel specie	D. Fir		
HHV		19810,0	kJ/kg
%C		48,7	
%H		6,9	
%O		43,9	
%Ash		0,5	
HHV		8519,2	Btu/lb
LHV		7451,0	Btu/lb

Default Fuel Values

	D. Fir	Oak/Maple
HHV	19 810	19 887
%C	48,73	50
%H	6,87	6,6
%O	43,9	42,9
%Ash	0,5	0,5
HHV (Btu/lb)	8519	8552
LHV (Btu/lb)	7451	7480

	Start	End
Barometer (kPa):	102,7	102,7
Barometer (in.Hg):	30,327299	30,32729858
Dry Bulb (F):	69,08	70,01
Humidity (%):	18,1	18,4
Air velocity (ft/min)	0	0

DGM #1	Final:	30956,748	cuft	Final:	876597,460	Liter
	Initial:	30933,423	cuft	Initial:	875936,980	Liter
DGM #2	Final:	29188,706	cuft	Final:	826532,100	Liter
	Initial:	29165,752	cuft	Initial:	825882,100	Liter

DGM room				Final:	613,340	cuft
				Initial:	582,920	cuft

Numéro de la ligne dans "Raw data" à partir duquel les données du VRAI test commencent: 176

Autres données à rentrer: dans preload data, load data, traverse et filter set weight

Project nu.	PI 20189
Date	19-03-2019
Technicien	M.M

Preload data sheet

Test Load Weight:

Lower	Ideal	Upper
8,25	9,17	10,09

Load Volume: 0,3403 cu. ft

Loading Density: 7,983 lbs./ft3

Number of Spaces:

Spacer weight (lbs):

Load Density (wet): 30,734 lbs./ft3

Dry Wood Density: 25,684202

Piece Size (in):			Weight	Meter Moisture Content					Ave. MC x	Volume
Thick	Wide	x Length	lbs	Dry Uncorrected %					Weight	Cubic Inches
1,5	3,5	8	0,93	19,1	19,6	19,6	19,5	19,4	18,0792	42,00
1,5	3,5	8	0,928	20	19,9	19,7	19,6	19,6	18,33728	42,00
1,5	3,5	8	0,982	19,1	19	19,2	19,2	19,3	18,81512	42,00
1,5	3,5	8	0,706	19,7	19,3	19,6	19,3	19,4	13,73876	42,00
1,5	3,5	8	0,656	20	20,1	20	19,8	19,8	13,08064	42,00
1,5	3,5	8	0,692	19,2	19,3	19,3	19,2	19,4	13,34176	42,00
1,5	3,5	8	0,7	20	20,6	20,4	20,3	20,4	14,238	42,00
1,5	3,5	8	0,686	19,9	19,6	19,7	19,4	19,4	13,4456	42,00
1,5	3,5	8	0,682	19,3	19,2	19,2	19,3	19,4	13,14896	42,00
1,5	3,5	8	0,7	20	20,6	20,3	20,4	20,3	14,224	42,00
1,5	3,5	8	0,668	19,6	19,3	19,3	19,4	19,2	12,93248	42,00
1,5	3,5	8	0,668	19,3	19,6	19,2	19,3	19,4	12,93248	42,00
1,5	3,5	8	0,758	19,9	19,6	19,4	19,5	19,6	14,8568	42,00
1,5	3,5	8	0,702	20,6	20,4	20,3	20,9	20,6	14,43312	42,00
										0,00
										0,00
										0,00
										0,00
										0,00
										0,00
										0,00
										0,00
										0,00
										0,00
										0,00
										0,00
										0,00
										0,00
										0,00
										0,00
										0,00
										0,00
								SUM MC:	205,6042	

PreTest Load Weight: 10,46 lbs.

Dry Weight: 3,96 kg.

Average Moisture Content: %

Dry: 19,66

19,66

Must be 18-28

Wet: 16,43

must be 15,2-22

Project nu.	PI 20189
Date	19-03-2019
Technicien	M.M

FUEL LOAD DATA SHEET, CSA B415

Test Load Weight:

Lower	Ideal	Upper
8,3	9,2	10,1

* For boilers, a loading density factor of 10 lb/ft3 is applied

Load Volume: 0,21 cu. ft

Loading Density: 7,2 lbs./ft3

Number of Spaces: 16

Spacer weight: lbs

Load Density (wet): 36,3 lbs./ft3

Dry Wood Density: 30,2 lbs./ft3

Piece Size (in): Thick	Wide	Length	Weight lbs	Meter Moisture Content Dry Uncorrected %					Ave. MC x Weight	Volume Cubic Inches	Ave. MC %
1,5	3,5	13,5	1,56	20,90	21,10	20,60	21,00	20,80	32,48928	70,88	20,9
1,5	3,5	13,5	1,40	20,80	20,60	20,90	21,10	21,00	29,31552	70,88	20,9
1,5	3,5	13,5	1,36	20,40	20,00	20,30	20,40	20,30	27,49968	70,88	20,3
1,5	3,5	13,5	1,74	19,30	19,20	19,60	19,60	19,50	33,90336	70,88	19,4
1,5	3,5	13,5	1,39	20,80	20,60	20,40	20,30	20,60	28,5506	70,88	20,5
1,5	0,75	5	0,13			20,10			2,5728	5,63	20,1
1,5	0,75	5	0,12			19,30			2,316	5,63	19,3
1,5	0,75	5	0,12			19,60			2,352	5,63	19,6
1,5	0,75	5	0,12			20,40			2,3664	5,63	20,4
1,5	0,75	5	0,12			22,30			2,7206	5,63	22,3
1,5	0,75	5	0,12			20,00			2,4	5,63	20,0
1,5	0,75	5	0,11			20,10			2,2512	5,63	20,1
1,5	0,75	5	0,12			19,30			2,3546	5,63	19,3
1,5	0,75	5	0,13			22,40			2,8224	5,63	22,4
1,5	0,75	5	0,12			23,00			2,806	5,63	23,0
1,5	0,75	5	0,15			19,90			2,9054	5,63	19,9
1,5	0,75	5	0,10			20,10			1,9296	5,63	20,1
1,5	0,75	5	0,13			21,10			2,743	5,63	21,1
1,5	0,75	5	0,14			21,60			3,1104	5,63	21,6
1,5	0,75	5	0,136			21,40			2,9104	5,63	21,4
1,5	0,75	5	0,108			21,30			2,3004	5,63	21,3
										0,00	
										0,00	
										0,00	
										0,00	
										0,00	
										0,00	
										0,00	
										0,00	
										0,00	
									SUM MCx 192,61964		20,7 %

Test Load Weight: 9,42 lbs.

Dry Weight: 3,55 kg.

Average Moisture Content: %

Dry: 20,45 Dry(EPA) 20,45 Dry(B415 20,45

20,45 Must be 19-25

Wet: 16,98 must be 15,2-22

Coal Bed Range: 1,9 lbs. to 2,4 lbs.

TEST CHARGE:

Coal bed weight: 2,4 lbs.

Project nu.	PI 20189
Date	19-03-2019
Technicien	M.M

Tunnel Traverse Worksheet (for velocity calculations)

Static Pressure: 0,32 in. H20
Barometer: 29,900 in. Hg

Pour un tunnel de 12" et plus, prendre 6 lectures

	TUNNEL VELOCITY	TUNNEL TEMP	SQUARE ROOT
	In. wc	°F	
A center			0,0000
B center			0,0000
A1			0,0000
A2			0,0000
A3			0,0000
A4			0,0000
A5			0,0000
A6			0,0000
B1			0,0000
B2			0,0000
B3			0,0000
B4			0,0000
B5			0,0000
B6			0,0000
AVERAGE	#DIV/0!	#DIV/0!	0,0000

PITOT CONSTANT=
0,939

Pour un tunnel moins de 12", prendre 4 lectures

	TUNNEL VELOCITY	TUNNEL TEMP	SQUARE ROOT
	In. wc	°F	
A center	0,063	69,12	0,2510
B center	0,062	68,97	0,2490
A1	0,052	69,12	0,2280
A2	0,053	69,17	0,2302
A3	0,055	69,14	0,2345
A4	0,052	69,04	0,2280
B1	0,054	68,970	0,2324
B2	0,058	69,100	0,2408
B3	0,052	69,340	0,2280
B4	0,051	69,550	0,2258
AVERAGE	0,0552	69,1520	0,2348

Project nu.	PI 20189
Date	19-03-2019
Technicien	M.M

Filter set weight

	System 1 (g) 1st hour				System 1 (g)				System 2 (g)				Ambient blank (g)	Date	Heure
	probe	front	back	gasket	probe	front	back	gasket	probe	front	back	gasket	Filter		
Number	12	43	44	21	16	45	46	29	41	47	48	44	49		
Before (1)															
Before (2)															
Before (3)															
Before (4)															
Before (5)	94,5388	0,1302	0,1299	34,4861	108,7533	0,1261	0,1309	34,4449	110,3651	0,1277	0,1288	35,3960	0,1312	2019-03-18	17:00
Before (6)	94,5388	0,1302	0,1300	34,4860	108,7533	0,1262	0,1310	34,4450	110,3652	0,1276	0,1288	35,3959	0,1312	2019-03-19	08:00
After (1)	94,5395	0,1316	0,1294	34,4895	108,7534	0,1259	0,1314	34,4468	110,3654	0,1291	0,1282	35,3991	0,1316	2019-03-19	14:00
After (2)	94,5395	0,1314	0,1291	34,4887	108,7533	0,1257	0,1311	34,4462	110,3653	0,1287	0,1279	35,3989	0,1315	2019-04-01	08:00
After (3)	94,5394	0,1314	0,1291	34,4886	108,7533	0,1257	0,1310	34,4461	110,3654	0,1287	0,1280	35,3990	0,1314	2019-04-02	08:00
After (4)															
After (5)															
After (6)	94,5394	0,1314	0,1291	34,4886	108,7533	0,1257	0,1310	34,4461	110,3654	0,1287	0,1280	35,3990	0,1314	2019-04-02	08:00
Difference	0,0006	0,0012	-0,0009	0,0026	0,0000	-0,0005	0,0000	0,0011	0,0002	0,0011	-0,0008	0,0031	0,0002		
Total (mg)		3,5				4,1				3,6			0,2		
Total ajusté (mg)		**3,30**				**3,90**				**3,40**					

Project nu.	PI 20189
Date	19-03-2019
Technicien	M.M

demonstration purpose only not the compliance number

Filter set weight

	System 1 (g) 1st hour				System 1 (g)				System 2 (g)				Ambient blank (g)	Date	Heure
	probe	front	back	gasket	probe	front	back	gasket	probe	front	back	gasket	Filter		
Number	12	43	44	21	16	45	46	29	41	47	48	44	49		
Before (1)															
Before (2)															
Before (3)															
Before (4)															
Before (5)	94,5388	0,1302	0,1299	34,4861	108,7533	0,1261	0,1309	34,4449	110,3651	0,1277	0,1288	35,3960	0,1312	2019-03-18	17:00
Before (6)	94,5388	0,1302	0,1300	34,4860	108,7533	0,1262	0,1310	34,4450	110,3652	0,1276	0,1288	35,3959	0,1312	2019-03-19	08:00
After (1)	94,5395	0,1316	0,1294	34,4895	108,7534	0,1259	0,1314	34,4468	110,3654	0,1291	0,1282	35,3991	0,1316	2019-03-19	14:00
After (2)	94,5395	0,1314	0,1291	34,4887	108,7533	0,1257	0,1311	34,4462	110,3653	0,1287	0,1279	35,3989	0,1315	2019-04-01	08:00
After (3)	94,5394	0,1314	0,1291	34,4886	108,7533	0,1257	0,1310	34,4461	110,3654	0,1287	0,1280	35,3990	0,1314	2019-04-02	08:00
After (4)															
After (5)															
After (6)	94,5394	0,1314	0,1300	34,4886	108,7533	0,1262	0,1310	34,4461	110,3654	0,1287	0,1288	35,3990	0,1314	2019-04-02	08:00
Difference	0,0006	0,0012	0,0000	0,0026	0,0000	0,0000	0,0000	0,0011	0,0002	0,0011	0,0000	0,0031	0,0002		
Total (mg)		4,4				5,5				4,4			0,2		
Total ajusté (mg)		**4,20**				**5,30**				**4,20**					

Project nu.	PI 20189
Date	19-03-2019
Technicien	M.M

emission rate 2,2g/hr
filter rounded to zero, not the compliance number

*		*	*	*	*	*1	*2	*3	*4	*5	*6	*7	*8	*	Mass flow 1	DGM 1	DGM 1	Filter 1	Mass flow 2	DGM 2	DGM 2	Filter 2
Elapsed		Weight				Flue	Room	Tunnel	Unit	Unit	Unit	Unit	Unit	Catalyst	Reading	Inlet T	Outlet T	Temp	Reading	Inlet T	Outlet T	Temp
Time	Raw data row	Remaining	CO	CO_2	O_2	Gas	Temp	Dry Bulb	Top	Back	R.Side	L.Side	Bottom	up								
min		lbs	%	%	%	°F	°F	°F	°F	°F	°F	°F	°F	°F	cuft/min	oF	oF	oF	cuft/min	oF	oF	oF
0,00	176,00	9,4	0,1	5,0	0,0	374,5	68,7	129,8	516,9	363,9	431,0	426,1	366,3	644,3	0,19	72,95	72,28	71,75	0,19	72,94	72,60	71,45
1,0	177,0	9,3	0,1	2,5	0,0	375,1	68,7	107,1	506,8	364,7	431,6	425,4	371,7	689,1	0,19	73,03	72,25	71,94	0,19	72,96	72,59	71,58
2,0	178,0	9,3	0,0	3,9	0,0	382,9	68,9	103,4	497,3	363,9	431,0	425,4	375,6	727,4	0,19	73,08	72,21	72,07	0,19	72,96	72,55	71,70
3,0	179,0	9,2	0,0	3,9	0,0	386,3	69,5	101,3	489,3	362,1	430,5	424,0	378,1	726,3	0,19	73,15	72,21	72,24	0,19	72,97	72,53	71,78
4,0	180,0	9,1	0,0	4,4	0,0	387,5	69,9	100,6	483,3	360,9	428,6	422,6	379,1	726,7	0,19	73,14	72,19	72,38	0,19	72,96	72,54	71,93
5,0	181,0	9,0	0,0	5,6	0,0	389,7	69,7	100,6	479,6	357,1	426,2	420,1	379,5	731,6	0,19	73,12	72,17	72,54	0,19	72,96	72,53	72,03
6,0	182,0	8,9	0,0	5,7	0,0	394,8	69,7	101,2	477,2	354,9	422,7	417,4	379,4	753,1	0,19	73,09	72,12	72,67	0,19	72,90	72,49	72,19
7,0	183,0	8,8	0,0	11,0	0,0	407,6	70,1	102,2	481,0	350,3	419,7	415,2	378,6	805,4	0,19	73,09	72,12	72,86	0,19	72,90	72,51	72,35
8,0	184,0	8,6	0,0	12,8	0,0	420,5	70,3	103,2	488,1	347,4	416,7	412,1	377,4	833,0	0,19	73,05	72,14	73,08	0,19	72,94	72,52	72,49
9,0	185,0	8,4	0,0	13,9	0,0	427,7	70,2	103,8	497,0	344,7	413,8	409,8	376,1	833,6	0,19	72,96	72,12	73,29	0,19	72,91	72,54	72,61
10,0	186,0	8,3	0,0	13,5	0,0	433,0	70,4	103,7	505,9	342,1	411,2	407,3	374,3	836,1	0,19	72,91	72,10	73,43	0,19	72,84	72,51	72,74
11,0	187,0	8,1	0,0	13,6	0,0	438,6	70,6	104,9	516,0	339,1	408,1	405,9	372,9	867,5	0,19	73,01	72,11	73,62	0,19	72,88	72,53	72,90
12,0	188,0	7,9	0,0	14,0	0,0	442,1	70,5	105,3	525,5	339,3	407,1	404,2	370,8	859,5	0,19	72,99	72,12	73,82	0,19	72,91	72,58	73,03
13,0	189,0	7,8	0,0	13,8	0,0	445,4	70,8	105,6	534,7	338,2	405,3	403,2	368,7	860,5	0,19	72,94	72,11	73,95	0,19	72,89	72,59	73,18
14,0	190,0	7,6	0,0	13,5	0,0	447,6	70,6	106,0	542,8	337,4	404,1	402,1	366,6	861,0	0,19	72,91	72,14	74,14	0,19	72,86	72,57	73,33
15,0	191,0	7,4	0,0	13,3	0,0	448,1	70,6	105,7	550,0	337,7	403,1	401,2	364,4	853,3	0,19	72,90	72,12	74,33	0,19	72,87	72,59	73,47
16,0	192,0	7,3	0,0	13,0	0,0	449,2	70,5	105,8	557,0	337,0	402,1	401,0	362,3	862,8	0,19	72,96	72,15	74,48	0,19	72,84	72,62	73,60
17,0	193,0	7,1	0,0	13,2	0,0	450,8	70,6	106,3	563,5	337,5	401,7	400,5	360,1	864,4	0,19	72,92	72,14	74,62	0,19	72,85	72,61	73,74
18,0	194,0	6,9	0,0	13,3	0,0	453,9	70,4	106,0	568,4	337,3	401,5	400,0	357,8	880,2	0,19	72,88	72,15	74,79	0,19	72,81	72,62	73,87
19,0	195,0	6,8	0,0	13,5	0,0	455,1	70,8	106,6	575,0	337,7	401,2	401,4	355,7	879,7	0,19	72,91	72,16	74,95	0,19	72,81	72,61	74,03
20,0	196,0	6,6	0,0	13,7	0,0	458,8	71,1	107,2	581,2	336,5	401,3	401,6	353,5	889,2	0,19	72,96	72,16	75,10	0,19	72,82	72,64	74,17
21,0	197,0	6,5	0,0	14,0	0,0	461,4	70,5	107,2	587,3	338,5	401,4	401,8	351,4	899,4	0,19	72,98	72,19	75,23	0,19	72,81	72,65	74,31
22,0	198,0	6,3	0,0	14,4	0,0	463,4	70,7	107,8	593,8	339,0	401,6	403,0	349,3	888,9	0,19	72,99	72,19	75,38	0,19	72,81	72,68	74,45
23,0	199,0	6,1	0,0	14,0	0,0	464,1	70,7	107,4	599,6	340,9	402,4	403,7	347,1	895,9	0,19	73,02	72,21	75,54	0,19	72,83	72,69	74,60
24,0	200,0	6,0	0,0	14,0	0,0	466,0	70,7	107,3	604,6	342,0	402,8	404,9	345,0	908,3	0,19	73,05	72,22	75,65	0,19	72,81	72,66	74,70
25,0	201,0	5,8	0,0	14,2	0,0	469,3	70,6	107,8	610,8	341,7	403,7	406,1	343,1	932,5	0,19	73,07	72,21	75,75	0,19	72,83	72,70	74,87
26,0	202,0	5,7	0,0	14,8	0,0	471,1	70,9	107,9	615,7	344,4	405,1	407,2	341,0	937,7	0,19	73,13	72,24	75,89	0,19	72,83	72,71	74,99
27,0	203,0	5,5	0,0	15,1	0,0	475,7	70,8	108,3	621,4	345,0	405,8	408,5	339,2	973,7	0,19	73,21	72,28	76,02	0,19	72,90	72,75	75,10
28,0	204,0	5,4	0,1	15,6	0,0	477,4	71,3	108,7	626,7	346,7	407,4	410,1	337,4	962,0	0,19	73,32	72,31	76,11	0,19	72,98	72,78	75,24
29,0	205,0	5,2	0,0	15,7	0,0	482,1	70,4	109,2	634,2	349,6	409,1	411,8	335,5	1008,7	0,19	73,43	72,33	76,25	0,19	73,03	72,81	75,37
30,0	206,0	5,0	0,2	16,4	0,0	484,4	70,8	109,0	641,6	350,9	410,6	414,2	333,7	997,4	0,19	73,53	72,36	76,34	0,19	73,08	72,84	75,45
31,0	207,0	4,9	0,2	16,5	0,0	485,0	70,9	109,6	647,9	354,7	412,8	415,9	331,9	1004,9	0,19	73,58	72,37	76,45	0,19	73,14	72,86	75,56
32,0	208,0	4,7	0,2	16,8	0,0	487,9	71,1	109,8	655,4	358,2	415,1	418,1	330,0	1012,0	0,19	73,62	72,40	76,58	0,19	73,16	72,88	75,65
33,0	209,0	4,5	0,3	16,7	0,0	489,7	71,2	109,4	662,7	361,9	417,5	420,3	328,0	1014,4	0,19	73,65	72,43	76,66	0,19	73,20	72,90	75,73
34,0	210,0	4,4	0,3	17,0	0,0	492,8	71,0	109,6	667,4	363,5	419,2	423,0	326,2	1016,4	0,19	73,66	72,44	76,77	0,19	73,20	72,92	75,83
35,0	211,0	4,2	0,4	16,8	0,0	491,9	71,5	109,9	672,6	366,5	421,9	425,4	324,4	1005,1	0,19	73,71	72,45	76,90	0,19	73,21	72,92	75,91
36,0	212,0	4,1	0,5	16,3	0,0	490,6	71,4	109,6	675,0	370,0	424,3	428,1	322,6	990,5	0,19	73,76	72,48	76,98	0,19	73,26	72,96	76,01
37,0	213,0	3,9	0,4	15,6	0,0	486,9	71,7	108,9	676,4	372,0	426,8	431,1	320,9	953,5	0,19	73,80	72,52	77,10	0,19	73,30	72,99	76,13
38,0	214,0	3,8	0,2	14,6	0,0	483,2	71,6	108,7	677,2	376,6	429,6	433,9	319,2	936,6	0,19	73,80	72,51	77,15	0,19	73,33	73,00	76,25
39,0	215,0	3,7	0,0	14,0	0,0	479,1	71,3	108,2	676,1	378,8	432,0	436,6	317,6	944,7	0,19	73,87	72,53	77,24	0,19	73,40	73,02	76,37
40,0	216,0	3,6	0,0	14,0	0,0	476,0	71,5	108,0	673,5	381,4	434,7	439,1	315,8	938,9	0,19	73,93	72,58	77,28	0,19	73,43	73,04	76,45
41,0	217,0	3,5	0,0	14,2	0,0	473,7	71,3	107,3	671,5	382,7	437,1	441,4	314,3	944,8	0,19	73,95	72,59	77,37	0,19	73,45	73,06	76,55
42,0	218,0	3,3	0,0	14,6	0,0	474,4	71,0	107,7	672,0	384,3	439,2	444,6	312,7	992,3	0,19	73,99	72,59	77,44	0,19	73,47	73,07	76,64
43,0	219,0	3,2	0,0	14,8	0,0	474,4	71,4	107,4	671,9	385,6	442,4	447,0	311,3	999,7	0,19	74,01	72,63	77,53	0,19	73,49	73,09	76,70
44,0	220,0	3,1	0,1	15,2	0,0	474,9	71,3	107,5	671,1	388,2	445,6	449,5	309,8	1013,5	0,19	74,05	72,63	77,59	0,19	73,55	73,11	76,75
45,0	221,0	3,0	0,1	15,5	0,0	475,0	71,7	107,2	670,8	390,2	448,6	451,3	308,3	1018,8	0,19	74,02	72,63	77,62	0,19	73,55	73,11	76,76
46,0	222,0	2,9	0,1	15,5	0,0	474,9	71,6	107,2	671,5	391,5	451,7	453,8	307,1	1018,6	0,19	73,97	72,63	77,70	0,19	73,50	73,12	76,80
47,0	223,0	2,7	0,1	15,5	0,0	473,5	72,1	106,4	671,2	391,8	454,9	454,3	306,0	1022,6	0,19	74,03	72,66	77,72	0,19	73,51	73,13	76,85
48,0	224,0	2,6	0,1	15,3	0,0	472,1	71,7	106,9	672,9	393,3	458,2	457,7	304,9	1020,4	0,19	74,03	72,66	77,76	0,19	73,52	73,12	76,92
49,0	225,0	2,5	0,2	15,2	0,0	470,0	71,8	107,0	671,9	394,2	461,7	459,8	304,0	1015,9	0,19	74,03	72,67	77,82	0,19	73,52	73,14	76,95
50,0	226,0	2,4	0,1	15,1	0,0	467,5	71,7	106,4	670,5	397,2	465,8	460,9	303,1	1011,7	0,19	74,01	72,67	77,87	0,19	73,53	73,16	77,01
51,0	227,0	2,3	0,1	15,4	0,0	464,9	71,9	106,5	670,5	398,4	469,0	463,4	302,4	1011,2	0,19	74,03	72,71	77,92	0,19	73,52	73,15	77,02
52,0	228,0	2,2	0,1	15,2	0,0	462,3	71,7	106,1	669,9	399,4	472,4	465,8	301,9	988,7	0,19	74,01	72,70	77,94	0,19	73,55	73,19	77,07
53,0	229,0	2,1	0,0	14,5	0,0	456,9	71,6	105,6	667,1	399,9	474,9	467,5	301,3	949,1	0,19	74,03	72,72	77,95	0,19	73,58	73,20	77,10
54,0	230,0	2,1	0,0	13,3	0,0	451,5	71,7	105,4	663,8	401,6	479,3	469,6	300,9	920,3	0,19	74,04	72,73	77,97	0,19	73,59	73,22	77,16
55,0	231,0	2,0	0,0	12,7	0,0	446,8	71,9	105,5	659,0	401,8	482,0	472,1	300,8	903,9	0,19	74,06	72,74	77,99	0,19	73,59	73,24	77,19
56,0	232,0	1,9	0,0	12,4	0,0	442,0	71,3	104,6	653,8	404,5	485,3	474,2	300,4	885,6	0,19	74,11	72,79	78,02	0,19	73,62	73,26	77,18
57,0	233,0	1,9	0,0	12,0	0,0	437,5	71,6	104,3	647,3	403,7	487,7	475,6	300,4	871,7	0,19	74,06	72,78	78,06	0,19	73,65	73,26	77,22
58,0	234,0	1,8	0,0	11,7	0,0	434,8	71,7	103,1	640,9	405,2	491,0	477,7	300,3	859,9	0,19	74,00	72,76	78,07	0,19	73,62	73,26	77,20
59,0	235,0	1,7	0,0	11,3	0,0	430,9	71,8	102,4	635,1	405,3	492,6	479,6	300,4	847,5	0,19	73,98	72,77	72,17	0,19	73,64	73,29	77,22
60,0	236,0	1,7	0,0	11,1	0,0	425,8	71,8	102,1	628,9	405,1	494,2	481,6	300,7	836,9	0,19	73,92	72,75	72,88	0,19	73,57	73,28	77,22
61,0	237,0	1,6	0,0	11,0	0,0	422,0	71,7	101,5	621,5	404,9	495,9	483,3	300,8	828,4	0,19	73,86	72,75	73,23	0,19	73,52	73,26	77,20
62,0	238,0	1,6	0,0	10,7	0,0	418,3	71,4	101,3	614,5	404,9	496,7	485,1	301,3	817,9	0,19	73,88	72,75	73,46	0,19	73,54	73,27	77,25
63,0	239,0	1,5	0,0	10,4	0,0	413,5	71,8	101,1	607,8	404,9	497,8	486,8	301,6	808,9	0,19	73,90	72,78	73,74	0,19	73,56	73,26	77,24
64,0	240,0	1,5	0,0	10,2	0,0	409,2	71,7	100,8	600,0	405,0	498,8	486,8	302,1	799,9	0,19	73,90	72,80	73,99	0,19	73,58	73,28	77,24
65,0	241,0	1,5	0,0	10,0	0,0	406,0	71,6	99,9	592,6	405,0	498,5	488,7	302,8	791,9	0,19	73,91	72,80	74,19	0,19	73,59	73,31	77,25
66,0	242,0	1,4	0,0	9,7	0,0	402,6	70,9	99,5	583,5	404,7	499,0	488,7	303,3	784,9	0,19	73,88	72,81	74,42	0,19	73,55	73,29	77,19
67,0	243,0	1,4	0,0	9,6	0,0	399,6	71,1	98,9	576,1	404,7	499,1	488,9	303,9	778,9	0,19	73,86	72,84	74,58	0,19	73,55	73,30	77,18
68,0	244,0	1,4	0,0	9,5	0,0	396,4	71,3	99,0	567,6	407,3	497,8	489,8	304,7	772,8	0,19	73,77	72,82	74,75	0,19	73,52	73,32	77,13
69,0	245,0	1,3	0,0	9,4	0,0	393,7	71,4	98,2	560,2	407,6	497,7	488,4	305,2	767,2	0,19	73,66	72,82	74,94	0,19	73,49	73,31	77,10
70,0	246,0	1,3	0,0	9,4	0,0	391,2	71,2	97,5	553,5	408,3	497,2	489,5	306,3	762,3	0,19	73,59	72,81	75,06	0,19	73,46	73,31	77,08
71,0	247,0	1,3	0,0	9,3	0,0	388,2	71,4	97,7	546,4	407,7	497,0	488,4	306,8	757,5	0,19	73,54	72,82	75,24	0,19	73,44	73,32	77,01
72,0	248,0	1,2	0,0	8,7	0,0	386,3	70,9	97,4	539,9	408,1	494,8	488,7	307,8	752,9	0,19	73,44	72,78	75,36	0,19	73,41	73,32	77,01
73,0	249,0	1,2	0,0	8,6	0,0	384,5	71,1	97,1	533,1	410,1	494,3	487,4	308,5	748,8	0,19	73,34	72,77	75,47	0,19	73,32	73,30	76,97
74,0	250,0	1,2	0,0	8,6	0,0	382,6	70,6	96,8	527,3	410,3	492,4	486,9	309,4	740,8	0,19	73,24	72,75	75,57	0,19	73,24	73,29	76,91
75,0	251,0	1,1	0,0	8,0	0,0	379,8	70,4	96,3	521,4	408,0	492,1	485,4	310,1	729,2	0,19	73,24	72,73	75,68	0,19	73,22	73,28	76,89
76,0	252,0	1,1	0,0	7,8	0,0	377,8	70,5	96,0	515,7	405,9	491,3	484,3	310,9	725,1	0,19	73,16	72,72	75,75	0,19	73,13	73,25	76,83
77,0	253,0	1,1	0,0	7,8	0,0	375,8	70,6	95,9	509,8	405,9	488,2	482,7	311,9	723,4	0,19	73,07	72,68	75,83	0,19	73,09	73,25	76,78
78,0	254,0	1,1	0,0	7,9	0,0	373,9	70,9	95,7	504,9	403,4	488,2	481,0	312,8	720,6	0,19	72,96	72,65	75,91	0,19	73,02	73,24	76,75
79,0	255,0	1,0	0,0	7,9	0,0	372,6	70,5	95,5	500,0	402,8	486,5	480,0	313,6	717,9	0,19	72,92	72,61	75,95	0,19	72,99	73,22	76,69
80,0	256,0	1,0	0,0	7,9	0,0	370,8	70,4	94,8	494,4	400,9	484,9	478,1	314,7	716,5	0,19	72,87	72,59	76,02	0,19	72,92	73,22	76,65
81,0	257,0	1,0	0,0	7,9	0,0	369,8	70,9	94,4	490,6	398,9	483,1	476,6	315,7	713,5	0,19	72,90	72,60	76,07	0,19	72,91	73,18	76,57
82,0	258,0	0,9	0,0	8,0	0,0	368,1	70,4	94,5	485,8	396,1	479,7	475,7	317,2	712,4	0,19	72,90	72,58	76,15	0,19	72,91	73,18	76,52
83,0	259,0	0,9	0,0	8,0	0,0	366,9	70,2	94,8	481,7	394,0	478,5	473,7	318,0	710,0	0,19	72,86	72,57	76,17	0,19	72,89	73,20	76,46
84,0	260,0	0,9	0,0	8,0	0,0	365,9	70,3	94,5	477,7	394,2	475,7	471,7	319,0	707,3	0,19	72,78	72,55	76,22	0,19	72,86	73,18	76,43
85,0	261,0	0,9	0,0	8,1	0,0	364,0	70,2	94,3	474,2	390,3	473,7	470,4	320,2	706,0	0,19	72,76	72,53	76,25	0,19	72,84	73,19	76,38
86,0	262,0	0,8	0,0	8,0	0,0	362,4	70,1	94,0	470,6	387,2	473,0	467,4	320,9	704,4	0,19	72,69	72,54	76,26	0,19	72,78	73,17	76,30
87,0	263,0	0,8	0,0	8,0	0,0	361,1	70,1	93,7	466,3	386,2	470,1	465,7	322,1	703,4	0,19	72,65	72,53	76,28	0,19	72,73	73,16	76,25
88,0	264,0	0,8	0,0	8,0	0,0	359,7	70,1	93,9	463,6	384,1	468,6	463,8	322,9	703,0	0,19	72,58	72,50	76,30	0,19	72,69	73,16	76,15

89,0	265,0	0,7	0,0	8,0	0,0	359,5	69,8	93,3	459,8	381,3	465,0	462,6	324,2	701,6	0,19	72,51	72,46	76,32	0,19	72,67	73,16	76,10
90,0	266,0	0,7	0,0	8,0	0,0	357,6	69,5	93,1	457,4	379,0	464,6	460,3	325,0	700,4	0,19	72,41	72,43	76,33	0,19	72,61	73,15	76,01
91,0	267,0	0,7	0,0	8,0	0,0	356,6	70,0	93,1	454,6	378,1	463,9	458,5	325,8	699,8	0,19	72,35	72,41	76,33	0,19	72,52	73,12	75,99
92,0	268,0	0,7	0,0	7,9	0,0	355,4	70,0	92,8	452,1	377,6	461,7	456,0	326,4	700,8	0,19	72,28	72,40	76,36	0,19	72,50	73,10	75,94
93,0	269,0	0,6	0,0	8,0	0,0	354,6	70,2	93,0	448,7	374,0	460,8	454,2	327,4	699,7	0,19	72,20	72,35	76,36	0,19	72,40	73,06	75,88
94,0	270,0	0,6	0,0	8,0	0,0	354,2	69,9	93,0	446,1	372,3	458,3	452,4	328,3	698,5	0,19	72,15	72,34	76,35	0,19	72,33	73,03	75,84
95,0	271,0	0,6	0,0	8,0	0,0	353,3	70,3	92,6	443,3	370,4	456,7	451,2	329,4	698,8	0,19	72,14	72,32	76,32	0,19	72,30	73,01	75,79
96,0	272,0	0,6	0,0	7,8	0,0	352,7	70,0	92,4	441,1	369,2	453,4	449,9	330,4	696,8	0,19	72,21	72,34	76,36	0,19	72,34	73,01	75,75
97,0	273,0	0,5	0,0	7,8	0,0	352,4	70,1	92,2	438,9	367,6	454,1	447,5	330,8	695,4	0,19	72,24	72,34	76,32	0,19	72,37	73,00	75,68
98,0	274,0	0,5	0,0	7,8	0,0	351,8	69,6	92,3	436,4	366,7	451,4	446,6	332,0	693,7	0,19	72,18	72,33	76,32	0,19	72,32	72,99	75,63
99,0	275,0	0,5	0,0	7,3	0,0	351,2	69,6	92,2	434,4	365,1	449,6	445,0	332,7	693,4	0,19	72,14	72,29	76,30	0,19	72,29	72,96	75,55
100,0	276,0	0,5	0,0	7,2	0,0	350,7	70,0	92,1	432,3	363,1	448,2	443,7	333,5	690,9	0,19	72,10	72,28	76,27	0,19	72,27	72,97	75,51
101,0	277,0	0,4	0,0	7,2	0,0	350,5	69,6	92,1	430,1	362,6	445,5	442,6	334,3	689,5	0,19	72,07	72,25	76,26	0,19	72,23	72,94	75,43
102,0	278,0	0,4	0,0	7,2	0,0	349,8	69,7	92,0	428,1	360,4	445,6	440,2	334,8	688,3	0,19	71,97	72,21	76,26	0,19	72,15	72,92	75,40
103,0	279,0	0,4	0,0	7,2	0,0	349,5	69,7	91,8	426,4	359,2	442,0	439,5	335,5	686,9	0,19	71,93	72,19	76,21	0,19	72,12	72,90	75,34
104,0	280,0	0,4	0,0	7,2	0,0	349,3	69,4	91,6	424,3	358,2	440,6	438,2	336,0	684,2	0,19	71,89	72,17	76,18	0,19	72,11	72,88	75,30
105,0	281,0	0,3	0,0	7,3	0,0	348,2	69,5	91,6	422,7	358,4	438,3	437,0	336,5	682,6	0,19	71,85	72,13	76,17	0,19	72,08	72,88	75,24
106,0	282,0	0,3	0,0	7,2	0,0	347,9	69,3	91,5	420,9	355,6	436,4	435,5	337,0	679,1	0,19	71,80	72,11	76,13	0,19	72,05	72,87	75,21
107,0	283,0	0,3	0,0	7,2	0,0	346,8	69,7	91,2	419,0	353,9	436,1	432,9	337,1	675,0	0,19	71,79	72,11	76,11	0,19	72,04	72,87	75,16
108,0	284,0	0,3	0,0	7,2	0,0	345,9	69,7	91,4	417,0	352,4	433,9	432,1	338,0	672,2	0,19	71,78	72,09	76,08	0,19	71,99	72,86	75,12
109,0	285,0	0,2	0,0	7,2	0,0	345,9	69,6	91,4	415,6	352,1	432,4	430,1	338,0	672,6	0,19	71,76	72,06	76,07	0,19	71,98	72,86	75,09
110,0	286,0	0,2	0,0	7,2	0,0	345,2	69,3	91,1	414,2	350,0	430,4	429,6	338,5	672,2	0,19	71,69	72,04	76,05	0,19	71,93	72,84	75,06
111,0	287,0	0,2	0,0	7,0	0,0	345,4	69,2	90,9	412,0	349,1	428,6	427,2	338,6	671,8	0,19	71,68	72,03	76,01	0,19	71,92	72,80	75,03
112,0	288,0	0,2	0,0	7,0	0,0	344,3	69,2	91,1	410,1	347,7	426,3	426,2	339,0	671,5	0,19	71,66	72,02	75,97	0,19	71,89	72,81	74,97
113,0	289,0	0,2	0,0	6,9	0,0	343,4	69,2	91,1	408,4	346,7	425,3	423,8	339,1	672,2	0,19	71,64	72,00	75,92	0,19	71,87	72,78	74,93
114,0	290,0	0,1	0,0	7,0	0,0	343,7	69,2	90,9	406,6	345,0	423,0	423,0	339,2	673,4	0,19	71,60	71,98	75,91	0,19	71,82	72,76	74,90
115,0	291,0	0,1	0,0	7,0	0,0	343,7	69,0	90,9	405,1	344,8	421,1	421,9	339,4	673,6	0,19	71,63	71,98	75,87	0,19	71,82	72,72	74,87
116,0	292,0	0,1	0,0	7,0	0,0	343,4	69,0	90,8	403,7	342,3	419,6	420,1	339,3	672,3	0,19	71,60	71,95	75,83	0,19	71,82	72,73	74,84
117,0	293,0	0,1	0,0	6,9	0,0	342,3	69,1	90,7	402,6	341,8	418,3	419,0	339,5	669,3	0,19	71,55	71,94	75,82	0,19	71,82	72,70	74,80
118,0	294,0	0,1	0,0	6,8	0,0	341,5	69,1	90,4	401,1	340,5	416,2	417,8	339,3	666,7	0,19	71,54	71,92	75,79	0,19	71,80	72,72	74,76
119,0	295,0	0,1	0,0	6,7	0,0	341,2	69,3	90,3	399,0	338,6	414,8	416,4	339,4	665,0	0,19	71,48	71,88	75,77	0,19	71,78	72,69	74,69
120,0	296,0	0,0	0,0	6,6	0,0	340,7	68,9	90,5	398,1	337,5	412,4	415,0	339,2	662,6	0,19	71,48	71,90	75,73	0,19	71,77	72,69	74,69

SFBA EPA EMISSION RESULTS

Test Duration: **120** min

PRESSURE FACTOR:
DGM 1 0,98346
DGM 2 0,98202
DGM 3 1,01361

TEMPERATURE FACTORS
DGM 1 0,99115
DGM 2 0,99075
DGM 3 0,99521

VOLUMES SAMPLED
DGM 1 22,759 SCft
DGM 2 22,050 Scft
DGM 3 30,557 SCft

TOTAL TUNNEL VOLUME : 20207

SAMPLE RATIOS
Sample Train 1: 887,862
Sample Train 2: 916,404

Paticulate concentration
Sample Train 1 **0,000180** g/dscf
Sample Train 2 **0,000163** g/dscf
Room **0,000007** g/dscf

TOTAL EMISSIONS
Sample Train 1 **3,51** g
Sample Train 2 **3,17** g

EMISSION RATES
Sample Train 1 **1,75** g/hr
Sample Train 2 **1,58** g/hr

1st hour emission rate **3,11** g/hr

	Train 1	Train 2
Cs	0,0001802	0,000163267

RESULTS

Average emission rate: 1,7 g/hr

Burn Rate : 1,773 Dry kg/hr

BAROMETRIC PRESSURE
Average: 30,327299 in Hg
Start: 30,327299 in Hg
End: 30,327299 in Hg

DGM CONTROLLER VALUES

DGM 1 Final: 30956,748 Cuft
Initial: 30933,423 Cuft

DGM 2 Final: 29188,706 Cuft
Initial: 29165,752 Cuft

DGM #3 Final: 613,340 Cuft
Initial: 582,920 Cuft

TEMPERATURES
DGM 1 532,714 °R
DGM 2 532,929 °R

CALIBRATION FACTORS
DGM 1 1,0010
DGM 2 0,9873
DGM #3 0,9958

TUNNEL FLOW RATE: 168,388 Dscfm

PARTICULATE CATCH
Total Sample Train 1: 4,10 mg
Total Sample Train 2: 3,60 mg
Total Sample Train 1 1st hour: 3,50 mg

DEVIATION: 5,11%

Manufacturer: HEARTHSTONE
Model: GM40

Run: 2
Project #: PI 20189
Test Duration: 120 min

Note: In the "Input data", "Calc. % O_2", "Fuel Properties", and "Mass Balance" columns, [e], [d], [g], [a]. [b], [c], [h], [u], [w], [j], and [k] refer to their respective variables in Clauses

	HHV	LHV
Eff	76,50%	82,69%
Comb Eff	99,50%	99,50%
HT Eff	76,89%	83,10%
Output	26 822	kJ/h
Burn Rate	1,77	kg/h
Grams CO	17	g
Input	35 060	kJ/h
MC wet	16,98	

Ultimate CO_2
$CO_{2\text{-ult}}$ 19,64
F_0
1,062

Overall Heating Efficiency: 76,50%
Combustion Efficiency: 99,50%
Heat Transfer Efficiency: 76,89%

Heat Output: 25 443 Btu/h
Heat Input: 33 258 Btu/h
Burn Duration: 2,00 h
Burn Rate: 3,90 lb/h
Stack Temp: 409,8 Deg. F

Averages	0,04	10,62	1,12	20,24	9,60	209,73	21,41	100,1%	76,2%	#DIV/0!
INPUT DATA			Oxygen Calculation			Input Data		Combust	Heat	Net
Elapsed Time	Weight Remaining (kg)	% CO [e]	% CO_2 [d]	Excess Air EA	Total O_2	Calc. % O_2 [g]	Flue Gas (ºC)	Room Temp (ºC)	Eff %	Transfer %	Eff %
0,00	4,26	0,06	4,97	290,9%	20,61	15,61	190,3	20,4	100,0%	67,6%	67,5%
1,00	4,22	0,06	2,52	660,2%	20,77	18,22	190,6	20,4	100,0%	48,0%	48,0%
2,00	4,22	0,01	3,91	401,2%	20,68	16,77	195,0	20,5	101,1%	61,3%	62,0%
3,00	4,17	0,01	3,94	397,2%	20,68	16,73	196,8	20,8	101,1%	61,3%	61,9%
4,00	4,13	0,01	4,42	343,6%	20,65	16,22	197,5	21,0	101,0%	64,1%	64,7%
5,00	4,08	0,01	5,61	249,5%	20,57	14,95	198,7	21,0	100,7%	69,0%	69,5%
6,00	4,04	0,01	5,70	244,5%	20,56	14,86	201,6	20,9	100,7%	68,9%	69,4%
7,00	3,99	0,01	10,97	79,0%	20,22	9,24	208,7	21,2	100,2%	77,6%	77,8%
8,00	3,90	0,01	12,77	53,7%	20,10	7,32	215,8	21,3	100,1%	78,6%	78,7%
9,00	3,81	0,01	13,93	40,8%	20,02	6,08	219,8	21,2	100,0%	79,2%	79,2%
10,00	3,76	0,02	13,51	45,2%	20,05	6,53	222,8	21,4	100,0%	78,7%	78,8%
11,00	3,67	0,01	13,64	43,9%	20,04	6,39	225,9	21,4	100,1%	78,7%	78,7%
12,00	3,58	0,01	13,97	40,5%	20,02	6,04	227,8	21,4	100,1%	78,8%	78,8%
13,00	3,54	0,01	13,81	42,2%	20,03	6,22	229,7	21,6	100,1%	78,6%	78,6%
14,00	3,45	0,01	13,51	45,3%	20,05	6,53	230,9	21,5	100,1%	78,3%	78,4%
15,00	3,36	0,01	13,35	47,1%	20,06	6,71	231,1	21,4	100,1%	78,1%	78,2%
16,00	3,31	0,00	13,04	50,6%	20,08	7,04	231,8	21,4	100,1%	77,9%	78,0%
17,00	3,22	0,00	13,18	49,0%	20,07	6,88	232,7	21,4	100,1%	77,9%	78,0%
18,00	3,13	0,01	13,30	47,6%	20,06	6,76	234,4	21,3	100,1%	77,9%	78,0%
19,00	3,08	0,01	13,46	45,8%	20,05	6,59	235,0	21,5	100,1%	78,0%	78,1%
20,00	2,99	0,01	13,68	43,5%	20,04	6,35	237,1	21,7	100,1%	78,1%	78,1%
21,00	2,95	0,01	13,98	40,5%	20,02	6,04	238,6	21,4	100,1%	78,2%	78,2%
22,00	2,86	0,01	14,39	36,4%	19,99	5,60	239,7	21,5	100,0%	78,4%	78,4%
23,00	2,77	0,01	14,01	40,1%	20,01	6,00	240,1	21,5	100,1%	78,1%	78,2%
24,00	2,72	0,01	14,04	39,8%	20,01	5,97	241,1	21,5	100,1%	78,1%	78,1%
25,00	2,63	0,01	14,16	38,7%	20,00	5,85	242,9	21,4	100,1%	78,0%	78,1%
26,00	2,59	0,02	14,75	33,0%	19,96	5,20	243,9	21,6	100,0%	78,4%	78,4%
27,00	2,49	0,02	15,13	29,7%	19,94	4,80	246,5	21,6	100,0%	78,5%	78,4%
28,00	2,45	0,07	15,64	25,0%	19,90	4,23	247,5	21,8	99,7%	78,7%	78,5%
29,00	2,36	0,04	15,69	24,8%	19,90	4,19	250,0	21,3	99,9%	78,6%	78,5%
30,00	2,27	0,23	16,40	18,1%	19,84	3,33	251,3	21,6	98,9%	78,9%	78,0%
31,00	2,22	0,23	16,53	17,1%	19,83	3,18	251,7	21,6	98,9%	78,9%	78,0%
32,00	2,13	0,21	16,80	15,5%	19,82	2,92	253,3	21,7	99,0%	79,0%	78,2%
33,00	2,04	0,34	16,71	15,2%	19,81	2,93	254,3	21,8	98,3%	78,9%	77,6%
34,00	2,00	0,28	16,98	13,8%	19,80	2,68	256,0	21,7	98,6%	78,9%	77,9%
35,00	1,91	0,42	16,76	14,3%	19,81	2,83	255,5	21,9	98,0%	78,8%	77,2%
36,00	1,86	0,50	16,27	17,2%	19,83	3,32	254,8	21,9	97,5%	78,6%	76,6%
37,00	1,77	0,40	15,59	22,8%	19,88	4,09	252,7	22,1	97,9%	78,3%	76,7%
38,00	1,72	0,17	14,64	32,7%	19,96	5,24	250,7	22,0	99,1%	77,9%	77,2%
39,00	1,68	0,03	14,01	39,9%	20,01	5,99	248,4	21,8	99,9%	77,7%	77,6%
40,00	1,63	0,02	13,99	40,2%	20,01	6,01	246,7	22,0	100,0%	77,8%	77,8%
41,00	1,59	0,01	14,24	37,8%	20,00	5,75	245,4	21,8	100,1%	78,0%	78,0%
42,00	1,50	0,01	14,57	34,7%	19,98	5,40	245,8	21,7	100,0%	78,2%	78,2%
43,00	1,45	0,04	14,78	32,5%	19,96	5,16	245,8	21,9	99,9%	78,3%	78,2%
44,00	1,41	0,09	15,25	28,1%	19,93	4,64	246,1	21,8	99,6%	78,6%	78,2%
45,00	1,36	0,06	15,49	26,2%	19,91	4,39	246,1	22,1	99,7%	78,7%	78,5%
46,00	1,32	0,07	15,54	25,9%	19,91	4,33	246,0	22,0	99,7%	78,7%	78,5%
47,00	1,23	0,06	15,46	26,6%	19,92	4,43	245,3	22,3	99,8%	78,7%	78,6%
48,00	1,18	0,14	15,28	27,4%	19,92	4,57	244,5	22,0	99,3%	78,6%	78,1%
49,00	1,13	0,21	15,20	27,5%	19,92	4,62	243,4	22,1	98,9%	78,6%	77,8%
50,00	1,09	0,11	15,08	29,3%	19,94	4,80	242,0	22,0	99,5%	78,7%	78,3%
51,00	1,04	0,06	15,41	26,9%	19,92	4,48	240,5	22,2	99,7%	79,0%	78,7%
52,00	1,00	0,06	15,22	28,6%	19,93	4,69	239,1	22,1	99,8%	78,9%	78,7%
53,00	0,95	0,02	14,45	35,8%	19,98	5,52	236,1	22,0	100,0%	78,6%	78,7%
54,00	0,95	0,01	13,30	47,6%	20,06	6,76	233,1	22,0	100,1%	78,0%	78,1%
55,00	0,91	0,01	12,71	54,5%	20,10	7,39	230,4	22,2	100,1%	77,8%	77,9%
56,00	0,86	0,01	12,43	57,9%	20,12	7,69	227,8	21,8	100,1%	77,7%	77,8%
57,00	0,86	0,01	11,97	64,0%	20,15	8,17	225,3	22,0	100,2%	77,5%	77,6%
58,00	0,82	0,01	11,66	68,4%	20,17	8,51	223,8	22,1	100,2%	77,3%	77,4%
59,00	0,77	0,01	11,31	73,6%	20,19	8,88	221,6	22,1	100,2%	77,1%	77,3%
60,00	0,77	0,01	11,06	77,5%	20,21	9,15	218,8	22,1	100,2%	77,1%	77,2%
61,00	0,73	0,01	10,96	79,1%	20,22	9,25	216,7	22,0	100,2%	77,1%	77,3%
62,00	0,73	0,01	10,70	83,5%	20,23	9,53	214,6	21,9	100,2%	77,0%	77,1%
63,00	0,68	0,01	10,38	89,1%	20,25	9,87	211,9	22,1	100,2%	76,8%	77,0%
64,00	0,68	0,01	10,20	92,5%	20,27	10,06	209,5	22,1	100,2%	76,8%	77,0%
65,00	0,68	0,01	10,05	95,4%	20,28	10,22	207,8	22,0	100,3%	76,8%	77,0%
66,00	0,64	0,01	9,74	101,6%	20,30	10,56	205,9	21,6	100,3%	76,5%	76,7%
67,00	0,64	0,00	9,59	104,8%	20,31	10,72	204,2	21,7	100,3%	76,5%	76,7%
68,00	0,64	0,00	9,47	107,3%	20,31	10,84	202,4	21,8	100,3%	76,5%	76,7%
69,00	0,59	0,00	9,37	109,4%	20,32	10,94	200,9	21,9	100,3%	76,5%	76,7%
70,00	0,59	0,00	9,36	109,8%	20,32	10,96	199,6	21,8	100,3%	76,6%	76,8%
71,00	0,59	0,00	9,31	110,9%	20,33	11,01	197,9	21,9	100,3%	76,6%	76,9%
72,00	0,54	0,01	8,72	125,2%	20,36	11,65	196,8	21,6	100,3%	75,9%	76,2%
73,00	0,54	0,01	8,63	127,4%	20,37	11,74	195,8	21,7	100,4%	75,9%	76,2%
74,00	0,54	0,01	8,60	128,3%	20,37	11,77	194,8	21,4	100,4%	75,9%	76,2%
75,00	0,50	0,01	7,97	146,2%	20,41	12,44	193,2	21,4	100,4%	75,1%	75,4%
76,00	0,50	0,01	7,77	152,5%	20,43	12,65	192,1	21,4	100,4%	74,9%	75,2%
77,00	0,50	0,01	7,79	151,9%	20,43	12,63	191,0	21,5	100,4%	75,0%	75,3%
78,00	0,50	0,01	7,86	149,8%	20,42	12,56	189,9	21,6	100,4%	75,2%	75,5%
79,00	0,45	0,01	7,89	148,8%	20,42	12,53	189,2	21,4	100,4%	75,3%	75,6%
80,00	0,45	0,01	7,92	147,7%	20,42	12,49	188,2	21,4	100,4%	75,5%	75,8%
81,00	0,45	0,01	7,94	147,2%	20,42	12,47	187,7	21,6	100,4%	75,6%	75,9%
82,00	0,41	0,01	7,97	146,2%	20,41	12,44	186,7	21,3	100,4%	75,7%	76,0%
83,00	0,41	0,01	7,97	146,3%	20,41	12,44	186,0	21,2	100,4%	75,7%	76,0%
84,00	0,41	0,01	7,99	145,7%	20,41	12,42	185,5	21,3	100,4%	75,8%	76,1%
85,00	0,41	0,01	8,05	143,7%	20,41	12,35	184,4	21,2	100,4%	76,0%	76,3%
86,00	0,36	0,01	8,04	144,1%	20,41	12,37	183,5	21,2	100,4%	76,0%	76,3%
87,00	0,36	0,01	8,02	144,7%	20,41	12,39	182,8	21,1	100,4%	76,1%	76,4%
88,00	0,36	0,01	8,02	144,8%	20,41	12,39	182,1	21,2	100,4%	76,1%	76,4%
89,00	0,32	0,01	8,01	145,2%	20,41	12,40	181,9	21,0	100,4%	76,1%	76,4%
90,00	0,32	0,01	8,00	145,2%	20,41	12,40	180,9	20,8	100,4%	76,2%	76,5%
91,00	0,32	0,01	8,02	144,7%	20,41	12,39	180,3	21,1	100,4%	76,3%	76,6%
92,00	0,32	0,01	7,91	148,3%	20,42	12,51	179,7	21,1	100,4%	76,2%	76,5%

93,00	0,27	0,01	7,96	146,7%	20,41	12,46	179,2	21,2	100,4%	76,3%	76,6%
94,00	0,27	0,01	7,97	146,2%	20,41	12,44	179,0	21,1	100,4%	76,3%	76,6%
95,00	0,27	0,01	7,99	145,7%	20,41	12,42	178,5	21,3	100,4%	76,4%	76,7%
96,00	0,27	0,01	7,82	150,9%	20,42	12,60	178,2	21,1	100,4%	76,2%	76,5%
97,00	0,23	0,01	7,76	153,0%	20,43	12,67	178,0	21,2	100,4%	76,1%	76,4%
98,00	0,23	0,01	7,79	151,9%	20,43	12,63	177,6	20,9	100,4%	76,2%	76,5%
99,00	0,23	0,01	7,33	167,8%	20,46	13,12	177,3	20,9	100,5%	75,4%	75,8%
100,00	0,23	0,01	7,23	171,5%	20,46	13,23	177,1	21,1	100,5%	75,3%	75,6%
101,00	0,18	0,01	7,18	173,3%	20,47	13,28	176,9	20,9	100,5%	75,2%	75,6%
102,00	0,18	0,01	7,18	173,4%	20,47	13,28	176,6	21,0	100,5%	75,2%	75,6%
103,00	0,18	0,01	7,21	172,2%	20,46	13,25	176,4	21,0	100,5%	75,3%	75,7%
104,00	0,18	0,01	7,25	170,9%	20,46	13,21	176,3	20,8	100,5%	75,4%	75,7%
105,00	0,14	0,01	7,26	170,2%	20,46	13,19	175,7	20,8	100,5%	75,5%	75,8%
106,00	0,14	0,01	7,25	170,9%	20,46	13,21	175,5	20,7	100,5%	75,4%	75,8%
107,00	0,14	0,01	7,23	171,5%	20,46	13,23	174,9	20,9	100,5%	75,5%	75,8%
108,00	0,14	0,01	7,20	172,8%	20,46	13,27	174,4	21,0	100,5%	75,5%	75,8%
109,00	0,09	0,01	7,20	172,7%	20,46	13,26	174,4	20,9	100,5%	75,5%	75,8%
110,00	0,09	0,01	7,16	174,0%	20,47	13,30	174,0	20,7	100,5%	75,4%	75,8%
111,00	0,09	0,01	7,02	179,8%	20,48	13,46	174,1	20,7	100,5%	75,1%	75,5%
112,00	0,09	0,01	6,98	181,1%	20,48	13,49	173,5	20,7	100,5%	75,1%	75,5%
113,00	0,09	0,01	6,93	183,1%	20,48	13,55	173,0	20,7	100,5%	75,1%	75,5%
114,00	0,05	0,01	6,97	181,7%	20,48	13,51	173,2	20,7	100,5%	75,1%	75,5%
115,00	0,05	0,01	6,97	181,7%	20,48	13,51	173,2	20,6	100,5%	75,1%	75,5%
116,00	0,05	0,01	7,00	180,4%	20,48	13,48	173,0	20,6	100,5%	75,2%	75,6%
117,00	0,05	0,01	6,87	185,8%	20,49	13,62	172,4	20,6	100,5%	75,0%	75,4%
118,00	0,05	0,01	6,80	188,6%	20,49	13,69	171,9	20,6	100,5%	74,9%	#DIV/0!
119,00	0,05	0,01	6,69	193,6%	20,50	13,81	171,8	20,7	100,5%	74,7%	75,1%
120,00	0,00	0,01	6,64	195,7%	20,50	13,86	171,5	20,5	100,5%	74,7%	75,1%

POLYTESTS
TESTING THROUGH YOUR REALITY

Date: 2019-03-20 Manufacturer: Hearthstone Model: Gm 40

Project #: pI 20189 Run: 3 Tech: MM Reviewer: BP

25 LBS kindling START FIRE
by pass open
Fan low
At 0.8 LBS install preload
At 1.8 LBS close Door
At 10 LBS close by pass
At 19 LBS
open Door
open bypass
crush coal bed
- close Door
- close bypass
- after 3 min
- Open Door
- open bypass
AF

TEST LOAD CONFIGURATION
- Insert load
- close Door
- close bypass

POLYTESTS
TESTING THROUGH YOUR REALITY

PRE / POST CHECKS

Date: 2-19-03-20 Manufacturer: Hearthstone Model: GM40

Project #: PI 20189 Run: 3 Tech: M M Reviewer: DP

Moisture Meter Calibration Check:	Equipment #	Time	12%	22%
	EM-191	7:00	ok	ok

	Pre-Test	Post-Test
Facility Conditions:		
Air Velocity from less than 2 feet	0 (max50 Fpm)	0 (max50 Fpm)
Smoke Capture Check (tunnel velocity)	ok	NA
Picture (4 sides)	ok	ok
Wood Heater Conditions:		
Date Wood Heater Stack Cleaned	2019-03-18	
Date Dilution Tunnel Cleaned	2019-03-18	
Induced Draft Check (max 0.005 H2O)	ok	
Traverse before ignition	ok	
Flow Rate 140 cfm ±10%		ok
Temperature System:		
Ambient (65°-90°F)	ok °F	
Wood Heater Surface (±125°F)	ok °F	
Proportional Checks:		
Thermocouple check	ok	
Pitot Clean	ok	
Pitot verification	ok	

Sampling Train ID Numbers:	Train 1st hour	Train 1	Train 2
Probe	2	10	37
Filter Front	50	52	55
Filter Back	51	53	56
Filter Thermocouple	11	11	12
Filter (<90°F)	ok	ok	ok

POLYTESTS
TESTING THROUGH YOUR REALITY

SAMPLING EQUIPMENT CHECK OUT

Date: 2019-03-20 Manufacturer: Hearthstone Model: GM 40

Project #: PT 20189 Run: 3 Tech: MM Reviewer: DP

Leakage Checks Tunnel Samplers

	System 1st hour		System 1		System 2	
Unplugged Flow Rate = .25cfm	Pre-Test ASTM (-15) CSA B415 (-5)	Post-Test (max test)	Pre-Test ASTM (-15) CSA B415 (-5)	Post-Test (Max test)	Pre-Test ASTM (-15) CSA B415 (-5)	Post-Test (Max test)
Vacuum (inches Hg.)	-15	-15	-15	-15	-15	-15
Final 1minute DGM (Liter)	876599.10	877127.35	876601.42	877127.70	826534.96	827054.58
Initial 1minute DGM (Liter)	876599.00	877127.25	876601.41	877127.55	826534.25	827054.51
Change © (Liter)	0.10	0.10	0.01	0.15	0.01	0.07
Allowable leakage .04 x Sample rate or 0.28Lpm CSA B415 (0.56)						
Check OK	ok	ok	ok	ok	ok	ok

Leakage Checks Flue Gas Sampler

Plugged Probe	Pre Test	Post Test
Vacuum (inches Hg.)	-5	-5
Rotometer Reading (mml/min.)	6	0
Flow Rate (lpm)	1.5	1.5
Allowable (.02 x Sample Rate)	30	30
Check OK	ok	ok

Leakage Checks Pitot

Plugged Probe	Pre Test 3 H2o static	Pre Test 0.4-0.5 H2o velocity	Post Test 3 H2o Static	Post Test 0.4-0.5 H2o velocity
Vacuum (inches Hg.)	3	.4	3	.5
Check OK (no change after 15 sec.)	ok	ok	ok	ok

POLYTESTS
TESTING THROUGH YOUR REALITY

PRE-TEST SCALE AUDIT

Date: 2019-03-20 Manufacturer: Heathstone Model: GM 40

Project #: PT 20189 Run: 3 Tech: MM Reviewer: DP

Scale Type	Audit		Measured Weight
	Equipment #	Weight	
Platform	EM-090	44 lbs, Class F	44 lbs
Wood	EM-096	44 lbs, Class F	44 lbs
Analytical	EM-128	100 mg, Class S	100 mg
Analytical	EM-129	200 g, Class S	200 g

LIMITS OF WEIGHT RANGES

ANALYTICAL SCALE: ..... 50%-150% of dry filter weight, ± 0.1 mg
PLATFORM SCALE ..... 20%-80% of ideal test load weight, ± 0.1 lbs or 1%
WOOD SCALE ..... 20%-80% of ideal test load weight, ± 0.01 lbs or 1%

Date: 2019-03-20 Manufacturer: Hearthstone Model: GM 40

Project #: PI 2018a Run: 3 Tech: MM Reviewer: AP

FOR TUNNELS < 12 in

Barometric pressure (P_{bar}) 107.5 (KPa.) Static pressure (P_q) 0.32 (inches w.c.)
Inside diameter: Port A _____ Port B _____.
Tunnel cross sectional area: .1963Ft^2
Pitot tube type: Standard

Traverse Point	Position (inches)			Velocity Head Δ_p (inches H_2O)	Tunnel Temperature (°F)
	6 po	7 po	8 po		
A- Centroid	3.00	3.50	4	0062	69.66
B - Centroid	3.00	3.50	4	~~0.06~~ MIN. 0.061	69.03
A-1	0.40	0.50	0.50	0050	69.59
A-2	1.50	1.75	2	0.0055	69.49
A-3	4.50	5.25	6	0057	69.41
A-4	5.60	6.5	7.5	0.051	69.33
B-1	0.40	0.50	0.50	0.049	69.01
B-2	1.50	1.75	2	0.054	68.87
B-3	4.50	5.25	6	0.050	68.63
B-4	5.60	6.5	7.5	0049	69.13
				AVERAGE	

$$v_s = K_p C_p (\sqrt{\Delta p})_{avg.} \sqrt{\frac{(T_s)_{avg}}{P_s M_s}}$$

Where,
C_p = pitot tube coefficient, dimension less = 0.99 for standard pitot.
Δ_p = manometer reading (inches H_2O)
T_s = average absolute dilution tunnel temperature (°F + 460)
P_s = absolute dilution tunnel gas pressure or $P_{bar} + P_{qg}$
P_q = static pressure $\frac{\text{in. } H_2O}{\{\ 13.6\ \}}$
M_s = 28.56, wet molecular weight of stack gas (alternatively, it may be measured)
K_p = 85.49 pitot tube constant, (conversion factor for English units)

$\Delta_p$avg. = average of the square roots of the velocity heads (Δ_p) measured at each traverse point.

POLYTESTS
TESTING THROUGH YOUR REALITY

CONTINUOUS ANALYZERS

Date: 2019-03-20 Manufacturer: Hearthstone Model: GM 40

Project #: pI 20189 Run: 3 Tech: MM Reviewer: DP

Pre-Test (Adjust and Record)

	ZERO		SPAN		CAL. (Record Only)	
CO	0	0	2,988	3,000	1,006	1,000
Tolerance CO		+/- 0.02		+/- 0.15		+/- 0.05
CO_2	0	0	18,06	18,00	9,72	10,00
Tolerance CO2		+/- 0.02		+/- 0.5		+/- 0.5
O_2 informative CSA B415 calculated value	na	na	na	na	na	na
	Actual	Should Be	Actual	Should Be	Actual	Should Be

Post Test (Record Only)

	Zero	Span	Cal.	Zero Drift	Limit	Span Drift	Limit	Cal. Drift	Limit	OK?	Not OK*
CO	0	2,985	1,000	0	0.02	0,003	0.15	0,006	0.05	✓	
CO_2	0	18,01	9,75	0	0.02	0,05	0.5	0,03	0.5	✓	

POLYTESTS
TESTING THROUGH YOUR REALITY

TEST DATA LOG

Date: 2019-03-20 Manufacturer: Hearthstone Model: GM 40

Project #: PI 20189 Run: 3 Tech: MM Reviewer: DP

RAW DRY GAS METER READINGS

	System 1	System 2	Blanck
Final (Liter)	877126,68	827053,48	637,44
Initial (Liter)	876602,22	826535,80	613,34

AMBIENT CONDITIONS

	Before	After
Barometer (kPa):	102,5	102,5
Dry Bulb (F):	70,34	74,30
Humidity (%):	19,7	23,5

Flow Meter

	Start	End
Flow meter reading	N.A	N.A

Flow Meter Verification

	Before	After
Flow meter Check (liters)	N.A	N.A
Scale Weight (Kg)	N.A	N.A

POLYTESTS
TESTING THROUGH YOUR REALITY

FUEL DATA

Date: 2019-03-20 Manufacturer: Hearthstone Model: GM40

Project #: PI 20189 Run: 3 Tech: MM Reviewer: DP

FUEL DESCRIPTION:

Type of wood:

PRE-TEST LOAD

Piece Size				Weight		Meter Moisture Content (% dry)*				
1 1/2	x3	x 8	in.	0 936	lbs.	21.4	22.0	21.6	21.3	21.3
1 1/2	x3	x 8	in.	0 918	lbs.	22.1	22.3	23.0	22.7	22.8
1 1/2	x3	x 8	in.	0 914	lbs.	21.4	21.3	21.8	21.3	21.9
1 1/2	x3	x 8	in.	0 932	lbs.	22.4	22.6	22.8	22.9	22.7
1 1/2	x3	x 8	in.	0 956	lbs.	21.9	21.8	21.3	21.6	21.9
1 1/2	x3	x 8	in.	0 924	lbs.	22.0	22.4	22.0	22.1	22.3
1 1/2	x3	x 8	in.	0 952	lbs.	20.6	20.9	20.8	20.8	20.7
1 1/2	x3	x 8	in.	0 936	lbs.	21.0	21.1	20.8	20.9	20.9
1 1/2	x3	x 8	in.	0 994	lbs.	19.9	20.6	20.0	20.1	20.0
1 1/2	x3	x 8	in.	0 962	lbs.	19.3	19.8	19.3	19.4	19.5
1 1/2	x3	x 8	in.	1 024	lbs.	20.1	20.3	20.8	20.5	20.4
1 1/2	x3	x 8	in.	0 984	lbs.	20.6	20.9	21.1	21.6	22.0
1 1/2	x3	x 8	in.	0 964	lbs.	19.9	19.6	19.8	19.3	19.4
1 1/2	x3	x 8	in.	0 986	lbs.	19.8	19.7	19.6	19.4	19.3
	x	x	in.		lbs.					
	x	x	in.		lbs.					
	x	x	in.		lbs.					
	x	x	in.		lbs.					
	x	x	in.		lbs.					
	x	x	in.		lbs.					
	x	x	in.		lbs.					
	x	x	in.		lbs.					
	x	x	in.		lbs.					

TEST LOAD WEIGHT: 13 38 lbs

POLYTESTS
TESTING THROUGH YOUR REALITY

FUEL DATA

Date: 2019-03-20 Manufacturer: Hearthstone Model: GM 40

Project #: pI 20189 Run: 3 Tech: MM Reviewer: DP

FUEL DESCRIPTION:

Type of wood :

TEST LOAD

Piece Size	Weight		Meter Moisture Content (% dry)*				
1 1/2 x 3 1/2 x 135 in.	1 478	lbs.	199	198	201	201	206
1 1/2 x 3 1/2 x 135 in.	1 316	lbs.	195	207	214	198	199
1 1/2 x 3 1/2 x 135 in.	1 540	lbs.	215	197	213	209	210
1 1/2 x 3 1/2 x 135 in.	1 438	lbs.	206	209	218	210	213
1 1/2 x 3 1/2 x 135 in.	1 356	lbs.	210	199	205	203	206
1 1/2 x 3/4 x 5 in.	0 136	lbs.			193		
1 1/2 x 3/4 x 5 in.	0 122	lbs.			196		
1 1/2 x 3/4 x 5 in.	0 110	lbs.			201		
1 1/2 x 3/4 x 5 in.	0 104	lbs.			204		
1 1/2 x 3/4 x 5 in.	0 128	lbs.			196		
1 1/2 x 3/4 x 5 in.	0 136	lbs.			194		
1 1/2 x 3/4 x 5 in.	0 118	lbs.			201		
1 1/2 x 3/4 x 5 in.	0 108	lbs.			206		
1 1/2 x 3/4 x 5 in.	0 140	lbs.			210		
1 1/2 x 3/4 x 5 in.	0 098	lbs.			214		
1 1/2 x 3/4 x 5 in.	0 136	lbs.			208		
1 1/2 x 3/4 x 5 in.	0 138	lbs.			200		
1 1/2 x 3/4 x 5 in.	0 104	lbs.			204		
1 1/2 x 3/4 x 5 in.	0 132	lbs.			209		
1 1/2 x 3/4 x 5 in.	0 110	lbs.			191		
1 1/2 x 3/4 x 5 in.	0 090	lbs.			192		
x x in.		lbs.					
x x in.		lbs.					
x x in.		lbs.					
x x in.		lbs.					
x x in.		lbs.					
x x in.		lbs.					

TEST LOAD WEIGHT: 944 lbs Min 20%: 189 Max 25%: 236

POLYTESTS
TESTING THROUGH YOUR REALITY

DILUTION TUNNEL PARTICULATE SAMPLER DATA

Date: 2019-03-20 Manufacturer: Hearthstone Model: GM 40

Project #: pT 20189 Run: 3 Tech: MM Reviewer: DO

		SYSTEM 1 – 1st hour				SYSTEM 1				
Pre-test Weight Record		Probe & Housing Number	Front Filter Number	Back Filter Number	gaskets	Probe & Housing Number	Front Filter Number	Back Filter Number	gaskets	Blanck
Date	Time	2	50	51	3	10	52	53	4	57
2019-03-19	17:00	61,1000	0,1287	0,1288	34,3500	94,6385	0,1280	0,1326	34,4229	0,1285
2019-03-20	8:00	61,1001	0,1287	0,1289	34,3501	94,6386	0,1281	0,1325	34,4228	0,1286

		SYSTEM 1 – 1st hour				SYSTEM 1				
Post-test Weight Record		Probe & Housing Number	Front Filter Number	Back Filter Number	gaskets	Probe & Housing Number	Front Filter Number	Back Filter Number	gaskets	Blanck
Date	Time	2	50	51	3	10	52	53	4	57
2019-03-20	14:00	61,1006	0,1310	0,1259	34,3563	94,6385	0,1284	0,1320	34,4239	0,1291
2019-04-01	8:00	61,1003	0,1305	0,1255	34,3562	94,6385	0,1281	0,1320	34,4233	0,1285
2019-04-02	8:00	61,1003	0,1305	0,1255	34,3562	94,6386	0,1281	0,1320	34,4233	0,1285

POLYTESTS
TESTING THROUGH YOUR REALITY

DILUTION TUNNEL PARTICULATE SAMPLER DATA

Date: 2019-03-20 Manufacturer: Hearthstone Model: GM 40

Project #: PI 20189 Run: 3 Tech: MM Reviewer: SO

		SYSTEM 2			
Pre-test Weight Record		Probe & Housing Number	Front Filter Number	Back Filter Number	gaskets
Date	Time	37	55	56	15
2019-03-19	17:00	107,9729	0,1313	0,1309	35,4455
2019-03-20	8:00	107,9728	0,1314	0,1310	35,4456	

		SYSTEM 2			
Post-test Weight Record		Probe & Housing Number	Front Filter Number	Back Filter Number	gaskets
Date	Time	37	55	56	15
2019.03.20	14:00	107,9732	0,1349	0,1299	35,4492
2019.04.01	8:00	107,9732	0,1344	0,1293	35,4489
2019.04.02	8:00	107.9732	0,1344	0,1293	35.4489

Paramètres

Tous les facteurs de corrections et autres paramètres qui peuvent être modifiés par l'utilisateur du fichier sont regroupés ici.

Code verrouillage:	HEA

Description du test

Test standard	EPA	
Run #	3	
Date	20-03-2019	
Technicien	M.M	
Project #	PI 20189	

Description de l'unité

Manufacturier	HEARTHSTONE	
Modèle	GM40	
Combustion system	Cat	
Appliance type	WOODSTOVE	
Firebox volume	1,31	cu ft.
Appliance weight empty	N.A	lbs
Appliance weight full	N.A	lbs

Paramètres du test

Logging time	1	min
Manufacturer's rated heat output	N.A	BTU/h Donnée fournie par le manfacturier
Targeted category	1	
Targeted output	N.A	BTU/h
Cp steel	N.A	BTU/lb-°F

Échantillonnage

Blank sampling rate	0,20	cuft/min
Internal probe diameter	0,18	in.
Calibration Factor (DGM #1):	1,001	Dimensionless
Equipment number (DGM #1):	EM 178	
Calibration Factor (DGM #2):	0,987	Dimensionless
Equipment number (DGM #2):	EM 178	
Calibration Factor (DGM #3):	0,996	
Equipment number (DGM #3):	EM 070	Dimensionless

Tunnel

Targeted tunnel flow rate	140	scfm
Tunnel diameter	6	in.
Molecular weight	29	
Pitot tube type	Standard	
Pitot tube coefficient	0,99	Dimensionless

Project nu.	PI 20189
Date	20-03-2019
Technicien	M.M

Fuel data

Fuel type	Dimension	
Fuel specie	D. Fir	
HHV	19810,0	kJ/kg
%C	48,7	
%H	6,9	
%O	43,9	
%Ash	0,5	
HHV	8519,2	Btu/lb
LHV	7451,0	Btu/lb

Default Fuel Values

	D. Fir	Oak/Maple
HHV	19 810	19 887
%C	48,73	50
%H	6,87	6,6
%O	43,9	42,9
%Ash	0,5	0,5
HHV (Btu/lb)	8519	8552
LHV (Btu/lb)	7451	7480

	Start	End
Barometer (kPa):	102,5	102,5
Barometer (in.Hg):	30,268239	30,26823861
Dry Bulb (F):	70,34	74,3
Humidity (%):	19,7	23,5
Air velocity (ft/min)	0	0

DGM #1	Final:	30975,437	cuft	Final:	877126,680	Liter
	Initial:	30956,916	cuft	Initial:	876602,220	Liter
DGM #2	Final:	29207,119	cuft	Final:	827053,480	Liter
	Initial:	29188,837	cuft	Initial:	826535,800	Liter

DGM room		Final:	637,440 cuft
		Initial:	613,340 cuft

Numéro de la ligne dans "Raw data" à partir duquel les données du VRAI test commencent: 211

Autres données à rentrer: dans preload data, load data, traverse et filter set weight

Project nu.	PI 20189
Date	20-03-2019
Technicien	M.M

Preload data sheet

Test Load Weight:

Lower	Ideal	Upper
8,25	9,17	10,09

Load Volume: 0,3403 cu. ft

Loading Density: 10,215 lbs./ft3

Number of Spaces:

Spacer weight (lbs):

Load Density (wet): 39,327 lbs./ft3

Dry Wood Density: 32,502777

Piece Size (in): Thick	Wide	x Length	Weight lbs	Meter Moisture Content Dry Uncorrected %					Ave. MC x Weight	Volume Cubic Inches
1,5	3,5	8	0,936	21,4	22	21,6	21,3	21,3	20,14272	42,00
1,5	3,5	8	0,918	22,1	22,3	23	22,7	22,8	20,72844	42,00
1,5	3,5	8	0,914	21,4	21,3	21,8	21,3	21,9	19,68756	42,00
1,5	3,5	8	0,932	22,4	22,6	22,8	22,9	22,7	21,13776	42,00
1,5	3,5	8	0,956	21,9	21,8	21,3	21,6	21,9	20,7452	42,00
1,5	3,5	8	0,924	22	22,4	22	22,1	22,3	20,47584	42,00
1,5	3,5	8	0,952	20,4	20,9	20,8	20,8	20,7	19,72544	42,00
1,5	3,5	8	0,936	21	21,1	20,8	20,9	20,9	19,59984	42,00
1,5	3,5	8	0,994	19,9	20,6	20	20,1	20	19,99928	42,00
1,5	3,5	8	0,962	19,3	19,8	19,3	19,4	19,5	18,72052	42,00
1,5	3,5	8	1,024	20,1	20,3	20,8	20,5	20,4	20,91008	42,00
1,5	3,5	8	0,984	20,6	20,9	21,1	21,6	22	20,90016	42,00
1,5	3,5	8	0,964	19,9	19,6	19,8	19,3	19,4	18,8944	42,00
1,5	3,5	8	0,986	19,8	19,7	19,6	19,4	19,3	19,28616	42,00
										0,00
										0,00
										0,00
										0,00
										0,00
										0,00
										0,00
										0,00
										0,00
										0,00
										0,00
										0,00
										0,00
										0,00
										0,00
										0,00
										0,00
										0,00
								SUM MC:	280,9534	

PreTest Load Weight: 13,38 lbs.

Dry Weight: 5,02 kg.

Average Moisture Content: %

Dry: 20,99

20,99
Must be 18-28

Wet: 17,35
must be 15,2-22

Project nu.	PI 20189
Date	20-03-2019
Technicien	M.M

FUEL LOAD DATA SHEET, CSA B415

Test Load Weight:

Lower	Ideal	Upper
8,3	9,2	10,1

* For boilers, a loading density factor of 10 lb/ft3 is applied

Load Volume: 0,21 cu. ft

Loading Density: 7,2 lbs./ft3

Number of Spaces: 16

Spacer weight: lbs

Load Density (wet): 36,7 lbs./ft3

Dry Wood Density: 30,5 lbs./ft3

Piece Size (in): Thick	Wide	Length	Weight lbs	Meter Moisture Content Dry Uncorrected %					Ave. MC x Weight	Volume Cubic Inches	Ave. MC %
1,5	3,5	13,5	1,48	19,90	19,80	20,10	20,10	20,00	29,53044	70,88	20,0
1,5	3,5	13,5	1,72	19,50	20,70	21,40	19,80	19,90	34,76616	70,88	20,3
1,5	3,5	13,5	1,54	21,50	19,70	21,30	20,90	21,00	32,1552	70,88	20,9
1,5	3,5	13,5	1,44	20,60	20,90	21,80	21,00	21,30	30,37056	70,88	21,1
1,5	3,5	13,5	1,36	21,00	19,90	20,50	20,30	20,60	27,74376	70,88	20,5
1,5	0,75	5	0,14			19,30			2,6248	5,63	19,3
1,5	0,75	5	0,12			19,60			2,3912	5,63	19,6
1,5	0,75	5	0,11			20,10			2,211	5,63	20,1
1,5	0,75	5	0,10			20,40			2,1216	5,63	20,4
1,5	0,75	5	0,13			19,60			2,5088	5,63	19,6
1,5	0,75	5	0,14			19,40			2,6384	5,63	19,4
1,5	0,75	5	0,12			20,10			2,3718	5,63	20,1
1,5	0,75	5	0,11			20,60			2,2248	5,63	20,6
1,5	0,75	5	0,14			21,00			2,94	5,63	21,0
1,5	0,75	5	0,10			21,40			2,0972	5,63	21,4
1,5	0,75	5	0,14			20,80			2,8288	5,63	20,8
1,5	0,75	5	0,14			20,00			2,76	5,63	20,0
1,5	0,75	5	0,10			20,40			2,1216	5,63	20,4
1,5	0,75	5	0,13			20,90			2,7588	5,63	20,9
1,5	0,75	5	0,11			19,10			2,101	5,63	19,1
1,5	0,75	5	0,09			19,20			1,728	5,63	19,2
										0,00	
										0,00	
										0,00	
										0,00	
										0,00	
										0,00	
										0,00	
										0,00	
										0,00	
									SUM MCx 192,99392		20,2 %

Test Load Weight: 9,44 lbs.

Dry Weight: 3,55 kg.

Average Moisture Content: %

Dry: 20,45 Dry(EPA) 20,45 Dry(B415 20,45

20,45 Must be 19-25

Wet: 16,98 must be 15,2-22

Coal Bed Range: 1,9 lbs. to 2,4 lbs.

TEST CHARGE:

Coal bed weight: 1,9 lbs.

Project nu.	PI 20189
Date	20-03-2019
Technicien	M.M

Tunnel Traverse Worksheet (for velocity calculations)

Static Pressure: 0,32 in. H20
Barometer: 29,900 in. Hg

Pour un tunnel de 12" et plus, prendre 6 lectures

	TUNNEL VELOCITY	TUNNEL TEMP	SQUARE ROOT
	In. wc	°F	
A center			0,0000
B center			0,0000
A1			0,0000
A2			0,0000
A3			0,0000
A4			0,0000
A5			0,0000
A6			0,0000
B1			0,0000
B2			0,0000
B3			0,0000
B4			0,0000
B5			0,0000
B6			0,0000
AVERAGE	#DIV/0!	#DIV/0!	0,0000

PITOT CONSTANT=
0,934

Pour un tunnel moins de 12", prendre 4 lectures

	TUNNEL VELOCITY	TUNNEL TEMP	SQUARE ROOT
	In. wc	°F	
A center	0,062	69,66	0,2490
B center	0,061	69,03	0,2470
A1	0,050	69,59	0,2236
A2	0,055	69,49	0,2345
A3	0,057	69,41	0,2387
A4	0,051	69,33	0,2258
B1	0,049	69,010	0,2214
B2	0,054	68,870	0,2324
B3	0,050	68,630	0,2236
B4	0,049	69,130	0,2214
AVERAGE	0,0538	69,2150	0,2317

Project nu.	PI 20189
Date	20-03-2019
Technicien	M.M

Filter set weight

	System 1 (g) 1st hour				System 1 (g)				System 2 (g)				Ambient blank (g)	Date	Heure
	probe	front	back	gasket	probe	front	back	gasket	probe	front	back	gasket	Filter		
Number	2	50	51	3	10	52	53	4	37	55	56	15	57		
Before (1)															
Before (2)															
Before (3)															
Before (4)															
Before (5)	61,1000	0,1287	0,1288	34,3500	94,6385	0,1280	0,1326	34,4229	107,9729	0,1313	0,1309	35,4455	0,1285	2019-03-19	17:00
Before (6)	61,1001	0,1287	0,1289	34,3501	94,6386	0,1281	0,1325	34,4228	107,9728	0,1314	0,1310	35,4456	0,1286	2019-03-20	08:00
After (1)	61,1006	0,1310	0,1259	34,3563	94,6385	0,1284	0,1320	34,4239	107,9732	0,1349	0,1299	35,4492	0,1291	2019-03-20	14:00
After (2)	61,1003	0,1305	0,1255	34,3562	94,6385	0,1281	0,1320	34,4233	107,9732	0,1344	0,1293	35,4489	0,1285	2019-04-01	08:00
After (3)	61,1003	0,1305	0,1255	34,3562	94,6386	0,1281	0,1320	34,4233	107,9732	0,1344	0,1293	35,4489	0,1285	2019-04-02	08:00
After (4)															
After (5)															
After (6)	61,1003	0,1305	0,1255	34,3562	94,6386	0,1281	0,1320	34,4233	107,9732	0,1344	0,1293	35,4489	0,1285	2019-04-02	08:00
Difference	0,0002	0,0018	-0,0034	0,0061	0,0000	0,0000	-0,0005	0,0005	0,0004	0,0030	-0,0017	0,0033	-0,0001		
Total (mg)		4,7				4,7				5			-0,1		
Total ajusté (mg)		**4,80**				**4,80**				**5,10**					

Project nu.	PI 20189
Date	20-03-2019
Technicien	M.M

demonstration purpose only not the compliance number

Filter set weight

	System 1 (g) 1st hour				System 1 (g)				System 2 (g)				Ambient blank (g)	Date	Heure
	probe	front	back	gasket	probe	front	back	gasket	probe	front	back	gasket	Filter		
Number	2	50	51	3	10	52	53	4	37	55	56	15	57		
Before (1)															
Before (2)															
Before (3)															
Before (4)															
Before (5)	61,1000	0,1287	0,1288	34,3500	94,6385	0,1280	0,1326	34,4229	107,9729	0,1313	0,1309	35,4455	0,1285	2019-03-19	17:00
Before (6)	61,1001	0,1287	0,1289	34,3501	94,6386	0,1281	0,1325	34,4228	107,9728	0,1314	0,1310	35,4456	0,1286	2019-03-20	08:00
After (1)	61,1006	0,1310	0,1259	34,3563	94,6385	0,1284	0,1320	34,4239	107,9732	0,1349	0,1299	35,4492	0,1291	2019-03-20	14:00
After (2)	61,1003	0,1305	0,1255	34,3562	94,6385	0,1281	0,1320	34,4233	107,9732	0,1344	0,1293	35,4489	0,1285	2019-04-01	08:00
After (3)	61,1003	0,1305	0,1255	34,3562	94,6386	0,1281	0,1320	34,4233	107,9732	0,1344	0,1293	35,4489	0,1285	2019-04-02	08:00
After (4)															
After (5)															
After (6)	61,1003	0,1305	0,1289	34,3562	94,6386	0,1281	0,1325	34,4233	107,9732	0,1344	0,1310	35,4489	0,1286	2019-04-02	08:00
Difference	0,0002	0,0018	0,0000	0,0061	0,0000	0,0000	0,0000	0,0005	0,0004	0,0030	0,0000	0,0033	0,0000		
Total (mg)		8,1				8,6				6,7			0		
Total ajusté (mg)		**8,10**				**8,60**				**6,70**					

Project nu.	PI 20189
Date	20-03-2019
Technicien	M.M

*		*	*	*	*	*1	*2	*3	*4	*5	*6	*7	*8	*	Mass flow 1	DGM 1	DGM 1	Filter 1	Mass flow 2	DGM 2	DGM 2	Filter 2
Elapsed		Weight				Flue	Room	Tunnel	Unit	Unit	Unit	Unit	Unit	Catalyst	Reading	Inlet T	Outlet T	Temp	Reading	Inlet T	Outlet T	Temp
Time	Raw data row	Remaining	CO	CO_2	O_2	Gas	Temp	Dry Bulb	Top	Back	R.Side	L.Side	Bottom	up								
min		lbs	%	%	%	°F	°F	°F	°F	°F	°F	°F	°F	°F	cuft/min	oF	oF	oF	cuft/min	oF	oF	oF
0,00	211,00	9,5	0,1	2,8	0,0	344,2	68,9	116,9	417,0	401,4	441,0	431,8	685,7	584,8	0,19	72,62	72,31	72,17	0,19	72,60	72,70	72,19
1,0	212,0	9,4	0,0	1,5	0,0	349,2	69,0	103,5	410,2	399,7	439,5	429,1	683,5	591,6	0,19	72,66	72,28	72,23	0,19	72,66	72,70	72,24
2,0	213,0	9,3	0,0	2,0	0,0	357,5	68,9	101,9	404,6	398,3	438,2	427,2	679,2	639,5	0,19	72,74	72,29	72,33	0,19	72,70	72,68	72,39
3,0	214,0	9,2	0,0	3,2	0,0	368,8	69,0	102,1	401,0	396,9	436,2	424,7	672,5	688,0	0,19	72,78	72,28	72,43	0,19	72,71	72,72	72,47
4,0	215,0	9,1	0,0	4,2	0,0	376,4	69,1	101,9	398,2	393,7	434,1	421,5	664,7	698,4	0,19	72,76	72,26	72,54	0,19	72,68	72,71	72,57
5,0	216,0	9,1	0,0	3,8	0,0	378,9	69,0	101,4	395,3	390,4	431,1	418,3	656,3	697,6	0,19	72,73	72,26	72,65	0,19	72,67	72,70	72,72
6,0	217,0	9,0	0,0	3,9	0,0	382,9	69,0	102,0	393,7	387,1	427,7	414,6	646,9	706,9	0,19	72,71	72,24	72,74	0,19	72,64	72,68	72,81
7,0	218,0	8,8	0,0	4,5	0,0	392,1	69,4	103,0	394,2	385,6	423,3	410,5	637,6	725,1	0,19	72,69	72,24	72,86	0,19	72,64	72,69	72,98
8,0	219,0	8,6	0,0	8,0	0,0	423,8	69,8	107,3	405,3	383,5	420,2	406,4	627,8	905,4	0,19	72,64	72,23	73,30	0,19	72,62	72,67	73,18
9,0	220,0	8,4	0,9	15,6	0,0	453,5	70,1	110,0	422,7	379,8	416,9	403,3	618,2	1005,2	0,19	72,61	72,20	73,47	0,19	72,57	72,66	73,42
10,0	221,0	8,1	0,8	16,5	0,0	472,6	70,3	112,1	443,2	378,2	414,8	400,8	609,1	1030,2	0,19	72,58	72,21	73,67	0,19	72,55	72,66	73,65
11,0	222,0	7,9	0,8	16,7	0,0	486,2	70,6	113,8	463,8	376,5	413,3	398,8	600,0	1034,0	0,19	72,62	72,22	73,91	0,19	72,56	72,65	73,85
12,0	223,0	7,7	0,6	16,7	0,0	496,1	70,8	115,2	484,9	375,6	412,0	397,9	591,3	1036,9	0,19	72,62	72,23	74,10	0,19	72,60	72,69	74,11
13,0	224,0	7,4	0,3	16,7	0,0	504,2	70,9	116,4	504,9	374,1	411,5	397,6	582,7	1046,2	0,19	72,64	72,23	74,33	0,19	72,61	72,71	74,36
14,0	225,0	7,2	0,4	16,8	0,0	510,6	71,2	117,5	523,7	375,1	412,0	397,4	575,0	1039,7	0,19	72,68	72,25	74,46	0,19	72,63	72,73	74,52
15,0	226,0	7,0	0,2	16,7	0,0	513,7	71,3	118,1	540,9	375,9	412,5	398,1	567,6	1038,9	0,19	72,73	72,27	74,64	0,19	72,66	72,75	74,71
16,0	227,0	6,8	0,2	16,6	0,0	519,2	71,4	119,0	557,8	377,4	413,5	399,2	560,5	1054,0	0,19	72,78	72,29	74,79	0,19	72,67	72,76	74,92
17,0	228,0	6,5	0,2	16,9	0,0	523,0	71,5	119,4	574,3	378,2	414,9	400,7	553,9	1064,5	0,19	72,87	72,31	74,93	0,19	72,70	72,81	75,10
18,0	229,0	6,3	0,2	16,9	0,0	526,7	71,8	120,2	589,0	379,3	416,7	402,3	547,8	1069,3	0,19	72,94	72,33	75,05	0,19	72,74	72,81	75,23
19,0	230,0	6,1	0,2	16,8	0,0	529,0	71,9	120,6	601,0	381,5	419,3	404,3	541,9	1074,4	0,19	73,03	72,37	75,14	0,19	72,79	72,83	75,42
20,0	231,0	5,9	0,3	17,2	0,0	531,8	71,8	121,0	614,3	383,3	422,0	406,3	536,1	1076,5	0,19	73,12	72,38	75,22	0,19	72,82	72,85	75,55
21,0	232,0	5,7	0,3	17,6	0,0	533,7	71,9	121,4	626,2	387,6	424,8	408,7	530,6	1078,9	0,19	73,22	72,40	75,33	0,19	72,87	72,87	75,78
22,0	233,0	5,4	0,3	17,5	0,0	536,3	71,8	121,5	636,1	388,8	428,4	411,2	525,7	1077,2	0,19	73,37	72,43	75,46	0,19	72,94	72,90	76,01
23,0	234,0	5,3	0,4	17,7	0,0	536,8	71,5	121,6	645,8	390,1	432,0	414,4	520,8	1074,6	0,19	73,47	72,45	75,56	0,19	72,99	72,92	76,18
24,0	235,0	5,0	0,6	17,6	0,0	537,9	71,4	121,6	653,5	393,6	436,5	417,8	515,6	1080,3	0,19	73,62	72,49	75,79	0,19	73,07	72,94	76,39
25,0	236,0	4,8	0,6	17,6	0,0	538,5	72,1	122,1	662,8	397,5	440,4	421,4	511,0	1079,3	0,19	73,70	72,52	76,00	0,19	73,14	72,97	76,58
26,0	237,0	4,6	0,7	17,7	0,0	539,1	72,0	122,3	670,6	401,7	444,9	424,2	506,5	1082,7	0,19	73,78	72,55	76,18	0,19	73,19	73,01	76,79
27,0	238,0	4,4	0,8	17,7	0,0	538,5	72,1	121,8	678,3	403,0	448,6	429,1	502,7	1082,0	0,19	73,86	72,58	76,34	0,19	73,24	73,02	76,98
28,0	239,0	4,2	0,9	17,7	0,0	538,3	72,4	122,2	684,5	407,0	453,6	433,0	498,8	1077,1	0,19	73,92	72,63	76,50	0,19	73,30	73,05	77,15
29,0	240,0	4,0	1,1	17,7	0,0	538,3	72,4	122,1	690,5	409,9	457,9	437,3	495,1	1073,3	0,19	74,01	72,66	76,67	0,19	73,37	73,06	77,39
30,0	241,0	3,8	1,1	17,6	0,0	538,4	72,6	122,2	695,7	414,3	462,7	441,2	492,1	1075,2	0,19	74,08	72,71	76,80	0,19	73,41	73,10	77,61
31,0	242,0	3,6	1,1	17,6	0,0	537,5	72,9	122,6	699,4	416,0	466,9	445,5	489,0	1074,9	0,19	74,14	72,72	76,94	0,19	73,46	73,14	77,79
32,0	243,0	3,5	1,2	17,7	0,0	536,9	72,5	122,0	704,3	420,6	471,7	449,5	486,0	1076,3	0,19	74,23	72,79	77,10	0,19	73,54	73,17	78,00
33,0	244,0	3,3	1,4	17,6	0,0	535,2	72,7	121,8	708,6	424,4	476,4	454,0	484,0	1077,3	0,19	74,31	72,82	77,24	0,19	73,60	73,23	78,17
34,0	245,0	3,1	1,2	17,7	0,0	533,0	72,8	121,7	713,2	426,4	481,0	458,4	481,4	1076,2	0,19	74,38	72,85	77,34	0,19	73,64	73,25	78,36
35,0	246,0	2,9	1,2	17,7	0,0	531,4	73,1	121,0	714,9	430,1	485,4	462,2	479,3	1074,9	0,19	74,43	72,85	77,50	0,19	73,70	73,27	78,55
36,0	247,0	2,8	0,8	17,5	0,0	531,4	73,1	120,8	717,5	434,5	489,2	466,7	477,1	1083,9	0,19	74,49	72,88	77,65	0,19	73,73	73,32	78,67
37,0	248,0	2,7	0,3	17,1	0,0	530,0	73,2	120,4	717,5	439,0	493,8	470,5	475,5	1061,4	0,19	74,58	72,93	77,83	0,19	73,78	73,35	78,81
38,0	249,0	2,5	0,2	16,4	0,0	527,7	73,1	120,0	718,8	442,1	498,4	474,5	474,1	1044,7	0,19	74,68	72,97	77,98	0,19	73,89	73,39	78,97
39,0	250,0	2,4	0,1	16,1	0,0	524,8	73,2	119,9	719,2	446,2	502,9	478,8	472,7	1022,1	0,19	74,76	73,02	78,06	0,19	73,94	73,44	79,09
40,0	251,0	2,3	0,1	15,7	0,0	520,8	73,3	119,3	719,2	448,5	507,0	482,5	472,0	1000,5	0,19	74,80	73,02	78,15	0,19	73,97	73,48	79,22
41,0	252,0	2,2	0,1	15,3	0,0	516,4	73,3	118,8	716,8	451,4	511,2	486,3	471,2	982,7	0,19	74,85	73,06	78,19	0,19	74,03	73,51	79,38
42,0	253,0	2,1	0,0	14,8	0,0	511,4	73,3	117,5	715,0	454,6	514,6	489,9	470,7	962,9	0,19	74,87	73,08	78,25	0,19	74,06	73,51	79,51
43,0	254,0	2,0	0,0	14,0	0,0	507,2	73,5	117,2	711,3	456,6	518,0	493,0	470,4	941,1	0,19	74,91	73,12	78,33	0,19	74,10	73,54	79,63
44,0	255,0	1,9	0,0	13,2	0,0	501,7	73,2	116,3	706,7	456,6	521,1	496,9	470,7	926,0	0,19	74,94	73,14	78,42	0,19	74,15	73,56	79,75
45,0	256,0	1,8	0,0	12,7	0,0	496,5	72,7	115,9	700,4	458,4	523,9	500,2	470,9	913,0	0,19	74,99	73,19	78,50	0,19	74,19	73,59	79,85
46,0	257,0	1,7	0,0	12,4	0,0	491,6	73,3	115,4	694,8	460,3	526,4	503,3	471,5	904,6	0,19	74,99	73,17	78,55	0,19	74,20	73,62	79,94
47,0	258,0	1,6	0,0	12,2	0,0	487,5	73,0	114,5	687,1	461,6	528,6	506,6	472,6	901,0	0,19	75,00	73,20	78,60	0,19	74,22	73,64	79,99
48,0	259,0	1,5	0,0	12,0	0,0	482,6	72,8	113,3	679,1	461,4	530,5	509,1	474,2	892,3	0,19	75,00	73,23	78,63	0,19	74,25	73,66	80,09
49,0	260,0	1,5	0,0	11,3	0,0	476,9	72,6	112,6	671,6	462,6	531,8	512,1	475,3	880,5	0,19	75,03	73,25	78,68	0,19	74,26	73,66	80,19
50,0	261,0	1,4	0,0	10,9	0,0	472,4	73,1	112,1	664,3	462,6	532,5	514,9	477,3	870,0	0,19	75,02	73,27	78,75	0,19	74,28	73,69	80,23
51,0	262,0	1,4	0,0	10,3	0,0	468,4	73,1	111,7	656,0	462,5	532,9	516,7	479,1	858,9	0,19	75,00	73,28	78,75	0,19	74,28	73,71	80,33
52,0	263,0	1,3	0,0	9,8	0,0	465,0	72,7	111,2	646,1	462,2	533,5	518,7	480,9	843,7	0,19	74,96	73,30	78,76	0,19	74,28	73,73	80,34
53,0	264,0	1,3	0,0	9,3	0,0	460,2	73,1	110,4	637,8	462,6	532,8	520,0	482,8	831,9	0,19	74,95	73,33	78,77	0,19	74,28	73,74	80,41
54,0	265,0	1,3	0,0	9,1	0,0	456,2	72,2	110,3	628,3	462,0	532,7	520,8	484,0	823,9	0,19	74,90	73,33	78,87	0,19	74,26	73,75	80,46
55,0	266,0	1,2	0,0	8,9	0,0	451,9	72,9	109,3	618,1	461,5	532,1	521,6	484,7	816,5	0,19	74,83	73,35	78,90	0,19	74,24	73,76	80,44
56,0	267,0	1,2	0,0	8,7	0,0	448,1	72,7	108,8	610,4	459,2	531,2	522,1	485,1	810,1	0,19	74,77	73,34	78,92	0,19	74,21	73,77	80,43
57,0	268,0	1,1	0,0	8,5	0,0	445,2	72,8	108,3	600,9	456,5	529,4	521,8	485,4	805,2	0,19	74,72	73,36	78,92	0,19	74,20	73,78	80,43
58,0	269,0	1,1	0,0	8,4	0,0	442,2	72,3	107,3	591,7	455,2	528,7	520,7	485,8	799,1	0,19	74,72	73,38	78,76	0,19	74,20	73,80	80,44
59,0	270,0	1,1	0,0	8,2	0,0	438,8	72,4	106,8	582,3	452,5	527,5	520,0	486,2	792,9	0,19	74,63	73,38	78,76	0,19	74,18	73,83	80,37
60,0	271,0	1,0	0,0	8,1	0,0	435,6	72,4	106,9	574,8	451,7	525,7	518,8	486,1	788,2	0,19	74,61	73,36	73,57	0,19	74,16	73,82	80,32
61,0	272,0	1,0	0,0	8,1	0,0	432,8	72,1	106,6	565,9	449,3	524,7	517,7	486,7	784,3	0,19	74,61	73,38	73,67	0,19	74,15	73,83	80,31
62,0	273,0	1,0	0,0	8,2	0,0	430,7	72,6	106,5	559,2	447,1	522,7	516,5	487,2	782,9	0,19	74,55	73,38	73,82	0,19	74,13	73,80	80,30
63,0	274,0	0,9	0,0	8,2	0,0	428,5	72,4	106,2	551,4	446,2	521,0	515,2	487,0	779,9	0,19	74,49	73,39	73,94	0,19	74,10	73,81	80,27
64,0	275,0	0,9	0,0	8,2	0,0	426,3	72,5	105,8	545,6	444,8	519,1	513,3	487,8	776,1	0,19	74,47	73,42	74,08	0,19	74,10	73,82	80,24
65,0	276,0	0,9	0,0	8,2	0,0	424,5	72,4	105,5	539,8	441,8	517,2	511,6	488,9	774,6	0,19	74,41	73,41	74,21	0,19	74,07	73,82	80,23
66,0	277,0	0,8	0,0	8,2	0,0	423,0	72,2	105,6	533,6	440,3	515,7	510,0	489,7	772,0	0,19	74,42	73,41	74,36	0,19	74,07	73,84	80,21
67,0	278,0	0,8	0,0	8,2	0,0	421,2	72,2	105,3	527,9	439,6	513,4	508,5	491,2	766,6	0,19	74,36	73,41	74,50	0,19	74,02	73,83	80,20
68,0	279,0	0,8	0,0	8,1	0,0	418,7	72,4	104,8	522,9	436,4	512,0	506,7	492,0	762,9	0,19	74,30	73,43	74,65	0,19	73,99	73,84	80,19
69,0	280,0	0,7	0,0	8,0	0,0	417,2	72,3	104,3	517,7	435,3	510,0	504,8	491,8	762,1	0,19	74,23	73,38	74,80	0,19	73,95	73,84	80,13
70,0	281,0	0,7	0,0	8,0	0,0	415,6	72,2	104,6	512,9	433,7	508,1	503,2	491,7	760,8	0,19	74,18	73,39	74,94	0,19	73,93	73,83	80,07
71,0	282,0	0,7	0,0	8,0	0,0	414,5	72,2	104,4	508,5	432,2	506,4	501,4	491,5	760,9	0,19	74,19	73,41	75,08	0,19	73,95	73,85	80,03
72,0	283,0	0,6	0,0	8,0	0,0	412,6	72,2	103,9	504,4	429,9	504,1	499,2	491,4	750,9	0,19	74,17	73,42	75,21	0,19	73,90	73,85	80,03
73,0	284,0	0,6	0,0	7,1	0,0	410,2	72,3	103,8	500,3	429,0	502,7	497,3	491,3	741,4	0,19	74,12	73,40	75,33	0,19	73,86	73,85	80,01
74,0	285,0	0,6	0,0	6,9	0,0	409,6	72,3	103,8	495,4	427,4	500,3	495,4	491,2	738,0	0,19	74,09	73,42	75,49	0,19	73,87	73,86	79,98
75,0	286,0	0,5	0,0	6,9	0,0	408,7	72,2	103,5	491,4	424,4	498,7	493,6	490,7	737,8	0,19	74,10	73,43	75,61	0,19	73,87	73,87	79,97
76,0	287,0	0,5	0,0	6,9	0,0	407,6	72,2	103,3	487,2	422,6	497,1	491,6	490,7	735,5	0,19	74,06	73,42	75,75	0,19	73,84	73,86	79,92
77,0	288,0	0,5	0,0	7,0	0,0	406,3	72,0	103,2	483,3	419,5	494,8	489,4	490,3	733,8	0,19	74,00	73,39	75,86	0,19	73,83	73,88	79,89
78,0	289,0	0,4	0,0	7,0	0,0	404,9	72,1	103,2	479,3	418,3	492,3	487,2	490,1	732,5	0,19	73,98	73,43	75,98	0,19	73,82	73,88	79,86
79,0	290,0	0,4	0,0	7,0	0,0	403,9	72,3	103,1	475,8	416,7	490,2	484,5	489,5	730,0	0,19	73,94	73,42	76,09	0,19	73,79	73,87	79,80
80,0	291,0	0,4	0,0	7,1	0,0	402,8	71,9	102,7	471,6	413,8	488,5	482,4	489,3	727,4	0,19	73,91	73,42	76,20	0,19	73,79	73,90	79,79
81,0	292,0	0,4	0,0	7,1	0,0	402,2	71,9	102,6	469,1	411,9	486,0	479,9	488,9	726,8	0,19	73,86	73,44	76,30	0,19	73,77	73,90	79,77
82,0	293,0	0,3	0,0	7,1	0,0	401,0	72,1	102,4	465,5	410,3	484,3	477,8	488,5	724,8	0,19	73,79	73,41	76,39	0,19	73,69	73,87	79,71
83,0	294,0	0,3	0,0	7,1	0,0	400,3	71,9	102,3	462,3	409,0	482,3	475,7	488,0	720,9	0,19	73,78	73,41	76,45	0,19	73,68	73,85	79,63
84,0	295,0	0,3	0,0	6,8	0,0	399,8	71,9	102,1	459,9	407,7	480,2	473,6	488,0	718,3	0,19	73,77	73,41	76,52	0,19	73,67	73,88	79,58
85,0	296,0	0,2	0,0	6,7	0,0	398,6	71,8	102,2	457,7	407,1	478,1	471,4	487,8	714,9	0,19	73,74	73,41	76,60	0,19	73,67	73,85	79,56
86,0	297,0	0,2	0,0	6,4	0,0	397,7	71,7	101,8	453,9	406,1	476,3	468,7	488,2	707,6	0,19	73,70	73,41	76,68	0,19	73,63	73,85	79,51
87,0	298,0	0,2	0,0	6,1	0,0	397,3	71,9	101,8	451,9	405,9	474,4	467,0	488,0	706,0	0,19	73,65	73,39	76,73	0,19	73,59	73,86	79,50
88,0	299,0	0,2	0,0	6,1	0,0	396,3	72,0	101,7	449,3	403,6	472,4	464,5	487,7	706,6	0,19	73,63	73,39	76,81	0,19	73,57	73,83	79,46

89,0	300,0	0,1	0,0	6,1	0,0	395,1	71,9	101,6	447,2	402,2	470,4	462,5	486,7	704,9	0,19	73,59	73,41	76,87	0,19	73,54	73,83	79,44
90,0	301,0	0,1	0,0	6,2	0,0	394,1	71,8	101,6	444,4	400,4	468,1	459,8	485,9	702,7	0,19	73,56	73,39	76,93	0,19	73,52	73,82	79,39
91,0	302,0	0,1	0,0	6,2	0,0	392,9	71,9	101,4	442,1	398,4	465,9	457,9	484,8	702,6	0,19	73,54	73,39	76,98	0,19	73,51	73,81	79,33
92,0	303,0	0,1	0,0	6,2	0,0	391,0	71,9	101,3	439,5	397,0	464,0	455,2	484,3	701,1	0,19	73,55	73,39	77,06	0,19	73,50	73,80	79,30
93,0	304,0	0,1	0,0	6,2	0,0	390,0	71,8	101,0	437,3	395,8	461,4	453,0	484,1	699,9	0,19	73,52	73,38	77,06	0,19	73,48	73,80	79,25
94,0	305,0	0,0	0,0	6,2	0,0	389,7	71,7	101,0	434,9	394,7	459,6	450,6	484,4	699,3	0,19	73,53	73,39	77,12	0,19	73,46	73,80	79,23

SFBA EPA EMISSION RESULTS

Test Duration: **94** min

PRESSURE FACTOR:
DGM 1 0,97753
DGM 2 0,97403
DGM 3 1,01164

TEMPERATURE FACTORS
DGM 1 0,98978
DGM 2 0,98972
DGM 3 0,99260

VOLUMES SAMPLED
DGM 1 17,938 SCft
DGM 2 17,400 Scft
DGM 3 24,098 SCft

TOTAL TUNNEL VOLUME : 15643

SAMPLE RATIOS
Sample Train 1: 872,034
Sample Train 2: 898,994

Paticulate concentration
Sample Train 1 **0,000262** g/dscf
Sample Train 2 **0,000287** g/dscf
Room **-0,000004** g/dscf

TOTAL EMISSIONS
Sample Train 1 **4,16** g
Sample Train 2 **4,56** g

EMISSION RATES
Sample Train 1 **2,66** g/hr
Sample Train 2 **2,91** g/hr

1st hour emission rate **4,10** g/hr

	Train 1	Train 2
Cs	0,000262	0,000287355

RESULTS

Average emission rate: 2,8 g/hr

Burn Rate : 2,269 Dry kg/hr

BAROMETRIC PRESSURE
Average: 30,268239 in Hg
Start: 30,268239 in Hg
End: 30,268239 in Hg

DGM CONTROLLER VALUES

DGM 1 Final: 30975,437 Cuft
Initial: 30956,916 Cuft

DGM 2 Final: 29207,119 Cuft
Initial: 29188,837 Cuft

DGM #3 Final: 637,440 Cuft
Initial: 613,340 Cuft

TEMPERATURES
DGM 1 533,451 °R
DGM 2 533,486 °R

CALIBRATION FACTORS
DGM 1 1,0010
DGM 2 0,9873
DGM #3 0,9958

TUNNEL FLOW RATE: 166,410 Dscfm

PARTICULATE CATCH
Total Sample Train 1: 4,70 mg
Total Sample Train 2: 5,00 mg
Total Sample Train 1 1st hour: 4,70 mg

DEVIATION: 4,54%

Manufacturer: HEARTHSTONE
Model: GM40

Run: 3
Project #: PI 20189
Test Duration: 94 min

Note: In the "Input data", "Calc. % O_2", "Fuel Properties", and "Mass Balance" columns, [e], [d], [g], [a]. [b], [c], [h], [u], [w], [j], and [k] refer to their respective variables in Clauses

	HHV	LHV
Eff	73,60%	79,55%
Comb Eff	98,32%	98,32%
HT Eff	74,86%	80,91%
Output	33 291	kJ/h
Burn Rate	2,28	kg/h
Grams CO	94	g
Input	45 232	kJ/h
MC wet	16,98	

Ultimate CO_2
$CO_{2\text{-ult}}$ 19,64
F_0
1,062

Overall Heating Efficiency: 73,60%
Combustion Efficiency: 98,32%
Heat Transfer Efficiency: 74,86%

Heat Output: 31 581 Btu/h
Heat Input: 42 908 Btu/h
Burn Duration: 1,57 h
Burn Rate: 5,03 lb/h
Stack Temp: 458,5 Deg. F

Averages	0,21	10,98	1,36	20,20	9,11	236,29	22,19	99,4%	73,2%	72,6%
INPUT DATA			Oxygen Calculation			Input Data		Combust	Heat	Net
Elapsed Time	Weight Remaining (kg)	% CO [e]	% CO_2 [d]	Excess Air EA	Total O_2	Calc. % O_2 [g]	Flue Gas (ºC)	Room Temp (ºC)	Eff %	Transfer %	Eff %
0,00	4,31	0,10	2,75	587,5%	20,75	17,95	173,5	20,5	98,7%	55,3%	54,6%
1,00	4,26	0,05	1,54	1141,3%	20,84	19,28	176,2	20,6	101,2%	28,7%	29,1%
2,00	4,22	0,01	2,02	870,0%	20,81	18,79	180,8	20,5	102,4%	41,0%	42,0%
3,00	4,17	0,01	3,17	518,7%	20,73	17,56	187,1	20,6	101,5%	56,7%	57,6%
4,00	4,13	0,01	4,20	367,0%	20,66	16,46	191,3	20,6	101,0%	63,7%	64,4%
5,00	4,13	0,01	3,77	420,5%	20,69	16,92	192,7	20,6	101,2%	60,7%	61,4%
6,00	4,08	0,01	3,89	404,2%	20,68	16,79	194,9	20,6	101,2%	61,2%	61,9%
7,00	3,99	0,01	4,52	334,0%	20,64	16,12	200,0	20,8	100,9%	64,2%	64,8%
8,00	3,90	0,00	8,02	144,8%	20,41	12,39	217,7	21,0	100,4%	73,0%	73,3%
9,00	3,81	0,88	15,57	19,4%	19,85	3,84	234,1	21,2	95,6%	79,1%	75,6%
10,00	3,67	0,85	16,47	13,5%	19,80	2,91	244,8	21,3	95,9%	79,0%	75,8%
11,00	3,58	0,83	16,67	12,2%	19,78	2,70	252,3	21,5	96,0%	78,8%	75,6%
12,00	3,49	0,57	16,69	13,8%	19,80	2,82	257,8	21,5	97,3%	78,6%	76,4%
13,00	3,36	0,34	16,68	15,4%	19,82	2,97	262,4	21,6	98,3%	78,4%	77,2%
14,00	3,27	0,36	16,79	14,5%	19,81	2,83	265,9	21,8	98,2%	78,3%	77,0%
15,00	3,17	0,22	16,70	16,1%	19,82	3,02	267,6	21,8	99,0%	78,2%	77,4%
16,00	3,08	0,16	16,61	17,1%	19,83	3,14	270,7	21,9	99,2%	78,1%	77,5%
17,00	2,95	0,23	16,91	14,6%	19,81	2,78	272,8	21,9	98,9%	78,1%	77,3%
18,00	2,86	0,24	16,86	14,9%	19,81	2,83	274,8	22,1	98,8%	78,0%	77,1%
19,00	2,77	0,23	16,77	15,5%	19,82	2,93	276,1	22,1	98,9%	77,9%	77,1%
20,00	2,68	0,29	17,17	12,5%	19,79	2,47	277,7	22,1	98,6%	78,0%	76,9%
21,00	2,59	0,33	17,58	9,6%	19,76	2,01	278,7	22,2	98,5%	78,2%	77,0%
22,00	2,45	0,34	17,55	9,8%	19,76	2,04	280,2	22,1	98,4%	78,1%	76,8%
23,00	2,40	0,41	17,68	8,6%	19,75	1,86	280,4	21,9	98,1%	78,1%	76,6%
24,00	2,27	0,58	17,58	8,2%	19,74	1,87	281,1	21,9	97,3%	78,0%	75,9%
25,00	2,18	0,63	17,65	7,5%	19,73	1,77	281,4	22,3	97,1%	78,0%	75,8%
26,00	2,09	0,68	17,66	7,1%	19,73	1,73	281,7	22,2	96,9%	78,0%	75,5%
27,00	2,00	0,76	17,75	6,1%	19,72	1,59	281,4	22,3	96,5%	78,0%	75,3%
28,00	1,91	0,91	17,66	5,8%	19,71	1,59	281,3	22,4	95,9%	77,9%	74,7%
29,00	1,81	1,10	17,66	4,7%	19,70	1,49	281,3	22,5	95,1%	77,9%	74,1%
30,00	1,72	1,15	17,62	4,7%	19,70	1,51	281,3	22,6	94,9%	77,9%	73,9%
31,00	1,63	1,12	17,62	4,9%	19,70	1,53	280,9	22,7	95,0%	77,9%	74,0%
32,00	1,59	1,24	17,66	3,9%	19,69	1,41	280,5	22,5	94,5%	77,9%	73,6%
33,00	1,50	1,35	17,62	3,6%	19,69	1,40	279,6	22,6	94,0%	77,9%	73,2%
34,00	1,41	1,20	17,67	4,1%	19,69	1,43	278,3	22,7	94,7%	78,0%	73,9%
35,00	1,32	1,16	17,67	4,3%	19,70	1,45	277,4	22,9	94,8%	78,1%	74,0%
36,00	1,27	0,83	17,53	6,9%	19,73	1,78	277,4	22,8	96,2%	78,1%	75,1%
37,00	1,23	0,31	17,09	12,9%	19,79	2,55	276,7	22,9	98,5%	78,0%	76,9%
38,00	1,13	0,15	16,44	18,3%	19,84	3,32	275,4	22,8	99,3%	77,8%	77,2%
39,00	1,09	0,12	16,15	20,8%	19,87	3,66	273,8	22,9	99,5%	77,7%	77,3%
40,00	1,04	0,10	15,74	24,0%	19,89	4,11	271,6	22,9	99,5%	77,6%	77,2%
41,00	1,00	0,07	15,34	27,5%	19,92	4,55	269,1	22,9	99,7%	77,5%	77,3%
42,00	0,95	0,03	14,81	32,3%	19,96	5,13	266,3	22,9	99,9%	77,3%	77,2%
43,00	0,91	0,02	14,02	39,9%	20,01	5,98	264,0	23,1	100,0%	76,9%	76,9%
44,00	0,86	0,01	13,25	48,2%	20,06	6,81	260,9	22,9	100,1%	76,4%	76,5%
45,00	0,82	0,01	12,72	54,3%	20,10	7,37	258,0	22,6	100,1%	76,1%	76,2%
46,00	0,77	0,01	12,41	58,2%	20,12	7,71	255,4	22,9	100,1%	76,0%	76,1%
47,00	0,73	0,01	12,20	61,0%	20,13	7,94	253,0	22,8	100,1%	76,0%	76,1%
48,00	0,68	0,01	11,96	64,2%	20,15	8,19	250,3	22,6	100,2%	75,9%	76,0%
49,00	0,68	0,01	11,34	73,1%	20,19	8,84	247,1	22,5	100,2%	75,5%	75,6%
50,00	0,64	0,01	10,91	79,9%	20,22	9,31	244,7	22,9	100,2%	75,2%	75,4%
51,00	0,64	0,01	10,31	90,4%	20,26	9,94	242,5	22,8	100,2%	74,7%	74,8%
52,00	0,59	0,01	9,79	100,6%	20,29	10,50	240,6	22,6	100,3%	74,1%	74,3%
53,00	0,59	0,01	9,31	110,9%	20,33	11,02	237,9	22,8	100,3%	73,6%	73,8%
54,00	0,59	0,01	9,06	116,7%	20,34	11,28	235,7	22,4	100,3%	73,4%	73,6%
55,00	0,54	0,01	8,93	119,9%	20,35	11,42	233,3	22,7	100,3%	73,4%	73,6%
56,00	0,54	0,01	8,73	124,9%	20,36	11,63	231,1	22,6	100,3%	73,2%	73,5%
57,00	0,50	0,01	8,46	131,9%	20,38	11,91	229,6	22,7	100,4%	72,9%	73,2%
58,00	0,50	0,01	8,42	133,2%	20,38	11,97	227,9	22,4	100,4%	73,0%	73,2%
59,00	0,50	0,01	8,15	140,8%	20,40	12,25	226,0	22,4	100,4%	72,6%	72,9%
60,00	0,45	0,01	8,14	141,3%	20,40	12,26	224,2	22,4	100,4%	72,8%	73,0%
61,00	0,45	0,01	8,13	141,3%	20,40	12,26	222,7	22,3	100,4%	72,9%	73,2%
62,00	0,45	0,01	8,23	138,4%	20,40	12,16	221,5	22,6	100,4%	73,2%	73,5%
63,00	0,41	0,01	8,23	138,4%	20,40	12,16	220,3	22,4	100,4%	73,3%	73,6%
64,00	0,41	0,01	8,23	138,4%	20,40	12,16	219,1	22,5	100,4%	73,4%	73,7%
65,00	0,41	0,01	8,17	140,3%	20,40	12,23	218,1	22,4	100,4%	73,4%	73,6%
66,00	0,36	0,01	8,20	139,3%	20,40	12,19	217,2	22,3	100,4%	73,5%	73,8%
67,00	0,36	0,01	8,17	140,3%	20,40	12,23	216,2	22,3	100,4%	73,5%	73,8%
68,00	0,36	0,01	8,07	143,3%	20,41	12,34	214,8	22,4	100,4%	73,5%	73,7%
69,00	0,32	0,01	8,04	144,2%	20,41	12,37	214,0	22,4	100,4%	73,5%	73,8%
70,00	0,32	0,01	8,04	144,3%	20,41	12,37	213,1	22,4	100,4%	73,6%	73,8%
71,00	0,32	0,01	8,03	144,3%	20,41	12,37	212,5	22,4	100,4%	73,6%	73,9%
72,00	0,27	0,01	8,00	145,2%	20,41	12,40	211,4	22,3	100,4%	73,6%	73,9%
73,00	0,27	0,01	7,11	176,0%	20,47	13,36	210,1	22,4	100,5%	72,0%	72,3%
74,00	0,27	0,01	6,95	182,4%	20,48	13,53	209,8	22,4	100,5%	71,7%	72,0%
75,00	0,23	0,01	6,88	185,2%	20,49	13,60	209,3	22,3	100,5%	71,6%	71,9%
76,00	0,23	0,01	6,90	184,5%	20,48	13,58	208,7	22,4	100,5%	71,6%	72,0%
77,00	0,23	0,01	6,98	181,2%	20,48	13,50	207,9	22,2	100,5%	71,9%	72,3%
78,00	0,18	0,01	7,05	178,5%	20,47	13,43	207,2	22,3	100,5%	72,1%	72,5%
79,00	0,18	0,01	7,05	178,5%	20,47	13,43	206,6	22,4	100,5%	72,2%	72,5%
80,00	0,18	0,01	7,06	177,9%	20,47	13,41	206,0	22,2	100,5%	72,3%	72,6%
81,00	0,18	0,01	7,08	177,2%	20,47	13,39	205,7	22,2	100,5%	72,3%	72,7%
82,00	0,14	0,01	7,10	176,6%	20,47	13,37	205,0	22,3	100,5%	72,4%	72,8%
83,00	0,14	0,01	7,08	177,3%	20,47	13,39	204,6	22,2	100,5%	72,4%	72,8%
84,00	0,14	0,01	6,78	189,3%	20,49	13,71	204,4	22,2	100,5%	71,8%	72,2%
85,00	0,09	0,01	6,75	190,8%	20,49	13,74	203,7	22,1	100,5%	71,8%	72,2%
86,00	0,09	0,01	6,39	207,2%	20,52	14,13	203,2	22,1	100,6%	70,9%	71,3%
87,00	0,09	0,01	6,06	223,9%	20,54	14,48	202,9	22,1	100,6%	70,0%	70,5%
88,00	0,09	0,01	6,08	222,9%	20,54	14,46	202,4	22,2	100,6%	70,2%	70,6%
89,00	0,05	0,01	6,09	222,0%	20,54	14,44	201,7	22,2	100,6%	70,3%	70,7%
90,00	0,05	0,01	6,17	217,8%	20,53	14,35	201,2	22,1	100,6%	70,6%	71,0%
91,00	0,05	0,01	6,16	218,7%	20,53	14,37	200,5	22,1	100,6%	70,6%	71,0%
92,00	0,05	0,01	6,22	215,3%	20,53	14,30	199,4	22,2	100,6%	70,9%	71,3%

93,00	0,05	0,01	6,24	214,5%	20,53	14,28	198,9	22,1	100,6%	71,0%	71,4%
94,00	0,00	0,01	6,17	217,8%	20,53	14,35	198,7	22,0	100,6%	70,8%	71,2%

POLYTESTS
TESTING THROUGH YOUR REALITY

Date: 2019-03-21 Manufacturer: Hearthstone Model: GM 40

Project #: pt 20189 Run: 4 Tech: MM Reviewer: DP

- loading 26LBS START FIRE
- FAN ON low
- by pass open
- At 17LBS close DOOR
- At 0.7LBS install preload
- At 100LBS close bypass
- At 41LBS close air inlet
- At 19LBS - open bypass
  - open DOOR
  - crush coal bed
  - close DOOR
  - close bypass
  - after 2 min
  - open bypass
  - open DOOR
  - open air inlet

TEST LOAD CONFIGURATION

- install load
- close DOOR
- close bypass
- after 5 min close air inlet

POLYTESTS
TESTING THROUGH YOUR REALITY

PRE / POST CHECKS

Date: 2019.03.21 Manufacturer: Hearthstone Model: GM 40

Project #: PI 20189 Run: 4 Tech: MM Reviewer: DP

	Equipment #	Time	12%	22%
Moisture Meter Calibration Check:	EM 191	7:50	ok	ok

Facility Conditions:

	Pre-Test	Post-Test
Air Velocity from less than 2 feet	0 (max50 Fpm)	0 (max50 Fpm)
Smoke Capture Check (tunnel velocity)	ok	NA
Picture	4 sides ok	ok

Wood Heater Conditions:

Date Wood Heater Stack Cleaned	2019.03.19
Date Dilution Tunnel Cleaned	2019.03.19
Induced Draft Check (max 0.005 H2O)	ok
Traverse before ignition	ok
Flow Rate 140 cfm ±10%	ok

Temperature System:

Ambient (65°-90°F)	ok °F
Wood Heater Surface (±125°F)	ok °F

Proportional Checks:

Thermocouple check	ok
Pitot Clean	ok
Pitot verification	ok

Sampling Train ID Numbers:

	Train 1st hour	Train 1	Train 2
Probe	31	36	39
Filter Front	58	60	62
Filter Back	59	61	63
Filter Thermocouple	11	11	12
Filter (<90°F)	ok	ok	ok

POLYTESTS
TESTING THROUGH YOUR REALITY

SAMPLING EQUIPMENT CHECK OUT

Date: 2019-03-21 Manufacturer: Hearthstone Model: GM 40

Project #: pT 20189 Run: 3 Tech: MM Reviewer: BO

Leakage Checks Tunnel Samplers

	System 1st hour		System 1		System 2	
Unplugged Flow Rate = .25cfm	Pre-Test ASTM (-15) CSA B415 (-5)	Post-Test (max test)	Pre-Test ASTM (-15) CSA B415 (-5)	Post-Test (Max test)	Pre-Test ASTM (-15) CSA B415 (-5)	Post-Test (Max test)
Vacuum (inches Hg.)	-15	-15	-15	-15	-15	-15
Final 1minute DGM (Liter)	877128,34	878132,09	877128,86	878132,17	827056,08	828042,63
Initial 1minute DGM (Liter)	877128,32	878132,08	877128,85	878132,16	827056,07	828042,63
Change © (Liter)	0,02	0,01	0,01	0,01	0,01	Ø
Allowable leakage .04 x Sample rate or 0.28Lpm CSA B415 (0.56)						
Check OK	ok	ok	ok	ok	ok	ok

Leakage Checks Flue Gas Sampler

Plugged Probe	Pre Test	Post Test
Vacuum (inches Hg.)	-5	-5
Rotometer Reading (mml/min.)	20	0
Flow Rate (lpm)	1.5	1.5
Allowable (.02 x Sample Rate)	30	30
Check OK	ok	ok

Leakage Checks Pitot

Plugged Probe	Pre Test 3 H2o static	Pre Test 0.4-0.5 H2o velocity	Post Test 3 H2o Static	Post Test 0.4-0.5 H2o velocity
Vacuum (inches Hg.)	3	.4	3	.5
Check OK (no change after 15 sec.)	ok	ok	ok	ok

POLYTESTS
TESTING THROUGH YOUR REALITY

PRE-TEST SCALE AUDIT

Date: 2019-03-21 Manufacturer: Hearthstone Model: GM 40

Project #: pI 2189 Run: 4 Tech: MM Reviewer: DP

Scale Type	Audit		Measured Weight
	Equipment #	Weight	
Platform	EM-090	44 lbs, Class F	44 lbs
Wood	EM-090	44 lbs, Class F	44 lbs
Analytical	EM-128	100 mg, Class S	100 mg
Analytical	EM-129	200 g, Class S	200 g

LIMITS OF WEIGHT RANGES

ANALYTICAL SCALE: ..... 50%-150% of dry filter weight, ± 0.1 mg
PLATFORM SCALE..... 20%-80% of ideal test load weight, ± 0.1 lbs or 1%
WOOD SCALE ..... 20%-80% of ideal test load weight, ± 0.01 lbs or 1%

Date: 2019-03-21 Manufacturer: Hearth stone Model: GM 40

Project #: PI 2018a Run: 4 Tech: M M Reviewer: [illegible]

FOR TUNNELS < 12 in

Barometric pressure (P_{bar}) 1018 (KPa.) Static pressure (P_q) 0,34 (inches w.c.)
Inside diameter: Port A _____ Port B _____.
Tunnel cross sectional area: .1963Ft^2
Pitot tube type: Standard

Traverse Point	Position (inches)			Velocity Head Δ_p (inches H_2O)	Tunnel Temperature (°F)
	6 po	7 po	8 po		
A- Centroid	3.00	3.50	4	0,062	69,55
B - Centroid	3.00	3.50	4	0,062	67,88
A-1	0.40	0.50	0.50	0,050	68,99
A-2	1.50	1.75	2	0,053	68,32
A-3	4.50	5.25	6	0,052	67,97
A-4	5.60	6.5	7.5	0,049	67,87
B-1	0.40	0.50	0.50	0,050	67,95
B-2	1.50	1.75	2	0,056	67,95
B-3	4.50	5.25	6	0,055	67,80
B-4	5.60	6.5	7.5	0,050	68,01
				AVERAGE	

$$v_s = K_p C_p (\sqrt{\Delta p})_{avg} \sqrt{\frac{(T_s)_{avg}}{P_s M_s}}$$

Where,
C_p = pitot tube coefficient, dimension less = 0.99 for standard pitot.
Δ_p = manometer reading (inches H_2O)
T_s = average absolute dilution tunnel temperature (°F + 460)
P_s = absolute dilution tunnel gas pressure or $P_{bar} + P_{qg}$
P_q = static pressure $\frac{\text{in. } H_2O}{\{\ 13.6\ \}}$
M_s = 28.56, wet molecular weight of stack gas (alternatively, it may be measured)
K_p = 85.49 pitot tube constant, (conversion factor for English units)

$\Delta_p$avg. = average of the square roots of the velocity heads (Δ_p) measured at each traverse point.

POLYTESTS
TESTING THROUGH YOUR REALITY

CONTINUOUS ANALYZERS

Date: 2019-03-21 Manufacturer: Heartstone Model: GM 40

Project #: PI 20189 Run: 4 Tech: MM Reviewer: DP

Pre-Test (Adjust and Record)

	ZERO		SPAN		CAL. (Record Only)	
CO	0	0	2,976	~~1800~~ 3000 PPM	1,006	1,000
Tolerance CO		+/- 0.02		+/- 0.15		+/- 0.05
CO_2	0	0	1802	1800	982	1000
Tolerance CO2		+/- 0.02		+/- 0.5		+/- 0.5
O_2 informative CSA B415 calculated value	na	na	na	na	na	na
	Actual	Should Be	Actual	Should Be	Actual	Should Be

Post Test (Record Only)

	Zero	Span	Cal.	Zero Drift	Limit	Span Drift	Limit	Cal. Drift	Limit	OK?	Not OK*
CO	0	2,980	0,998	0	0.02	0,004	0.15	0,008	0.05	✓	
CO_2	0	1791	980	0	0.02	011	0.5	0,02	0.5	✓	

POLYTESTS
TESTING THROUGH YOUR REALITY

TEST DATA LOG

Date: 2019-03-21 Manufacturer: Heathstone Model: GM 40

Project #: PI 2189 Run: 4 Tech: MM Reviewer: DP

RAW DRY GAS METER READINGS

	System 1	System 2	Blanck
Final (Liter)	878131,07	828041,66	683,28
Initial (Liter)	877129,25	827056,65	637,44

AMBIENT CONDITIONS

	Before	After
Barometer (kPa):	101,8	101,5
Dry Bulb (F):	70,16	74,84
Humidity (%):	25,4	27,8

Flow Meter

	Start	End
Flow meter reading	N.A	NA

Flow Meter Verification

	Before	After
Flow meter Check (liters)	NA	NA
Scale Weight (Kg)	N.A	N.A

POLYTESTS
TESTING THROUGH YOUR REALITY

FUEL DATA

Date: 2019. 03. 21 Manufacturer: Hearthstone Model: GM 40

Project #: pI 20189 Run: 4 Tech: MR Reviewer: DP

FUEL DESCRIPTION:

Type of wood:

PRE-TEST LOAD

Piece Size	Weight		Meter Moisture Content (% dry)*				
1 1/2 x 3 1/2 x 8 in.	0 786	lbs.	206	204	20	203	202
1 1/2 x 3 1/2 x 8 in.	0 916	lbs.	208	200	201	204	203
1 1/2 x 3 1/2 x 8 in.	0 910	lbs.	200	206	208	209	199
1 1/2 x 3 1/2 x 8 in.	0 910	lbs.	198	196	201	199	198
1 1/2 x 3 1/2 x 8 in.	0 916	lbs.	206	204	208	209	210
1 1/2 x 3 1/2 x 8 in.	0 916	lbs.	199	198	201	204	203
1 1/2 x 3 1/2 x 8 in.	0 896	lbs.	203	209	206	208	207
1 1/2 x 3 1/2 x 8 in.	0 904	lbs.	196	192	193	192	195
1 1/2 x 3 1/2 x 8 in.	0 902	lbs.	198	197	195	194	193
1 1/2 x 3 1/2 x 8 in.	0 916	lbs.	200	202	204	206	208
1 1/2 x 3 1/2 x 8 in.	0 956	lbs.	199	211	216	209	203
1 1/2 x 3 1/2 x 8 in.	0 920	lbs.	203	204	206	204	208
1 1/2 x 3 1/2 x 8 in.	0 940	lbs.	210	214	210	210	213
1 1/2 x 3 1/2 x 8 in.	0 918	lbs.	206	203	208	204	206
x x in.		lbs.					
x x in.		lbs.					
x x in.		lbs.					
x x in.		lbs.					
x x in.		lbs.					
x x in.		lbs.					
x x in.		lbs.					
x x in.		lbs.					
x x in.		lbs.					

TEST LOAD WEIGHT: 12, 71 lbs

POLYTESTS
TESTING THROUGH YOUR REALITY

FUEL DATA

Date: 2019-03-21 Manufacturer: Hearthstone Model: Gm 40

Project #: pI 20189 Run: 4 Tech: MF Reviewer: DP

FUEL DESCRIPTION:

Type of wood :

TEST LOAD

Piece Size	Weight	Meter Moisture Content (% dry)*				
1 1/2 x 3 1/2 x 13 1/2 in.	1 548 lbs.	19.1	19.3	19.2	19.6	19.4
1 1/2 x 3 1/2 x 13 1/2 in.	1 468 lbs.	19.8	19.6	20.1	20.4	20.8
1 1/2 x 3 1/2 x 13 1/2 in.	1 478 lbs.	20.1	20.3	20.8	20.5	20.6
1 1/2 x 3 1/2 x 13 1/2 in.	1 622 lbs.	20.6	20.9	21.0	21.4	20.8
1 1/2 x 3 1/2 x 13 1/2 in.	1 352 lbs.	19.3	19.8	19.6	19.7	19.9
1 1/2 x 3/4 x 5 in.	0 108 lbs.			19.1		
1 1/2 x 3/4 x 5 in.	0 098 lbs.			19.6		
1 1/2 x 3/4 x 5 in.	0 126 lbs.			19.5		
1 1/2 x 3/4 x 5 in.	0 098 lbs.			19.9		
1 1/2 x 3/4 x 5 in.	0 110 lbs.			19.9		
1 1/2 x 3/4 x 5 in.	0 132 lbs.			19.3		
1 1/2 x 3/4 x 5 in.	0 124 lbs.			19.2		
1 1/2 x 3/4 x 5 in.	0 108 lbs.			20.1		
1 1/2 x 3/4 x 5 in.	0 102 lbs.			19.9		
1 1/2 x 3/4 x 5 in.	0 096 lbs.			19.3		
1 1/2 x 3/4 x 5 in.	0 100 lbs.			19.8		
1 1/2 x 3/4 x 5 in.	0 112 lbs.			19.3		
1 1/2 x 3/4 x 5 in.	0 108 lbs.			19.9		
1 1/2 x 3/4 x 5 in.	0 130 lbs.			19.6		
1 1/2 x 3/4 x 5 in.	0 134 lbs.			20.1		
1 1/2 x 3/4 x 5 in.	0 110 lbs.			20.0		
x x in.	lbs.					
x x in.	lbs.					
x x in.	lbs.					
x x in.	lbs.					
x x in.	lbs.					
x x in.	lbs.					

TEST LOAD WEIGHT: 9 2 9 lbs Min 20%: 1 86 Max 25%: 2 32

POLYTESTS
TESTING THROUGH YOUR REALITY

DILUTION TUNNEL PARTICULATE SAMPLER DATA

Date: 2019-03-20 Manufacturer: Hearthstone Model: GM 40

Project #: pT 20189 Run: 4 Tech: M M Reviewer:

		SYSTEM 1 – 1st hour				SYSTEM 1				
Pre-test Weight Record		Probe & Housing Number	Front Filter Number	Back Filter Number	gaskets	Probe & Housing Number	Front Filter Number	Back Filter Number	gaskets	Blanck
Date	Time	31	58	59	7	36	60	61	33	64
2019-03-20	17:00	110,1269	0,1300	0,1297	35,0949	107,7339	0,1288	0,1304	35,5712	0,1263
2019-03-21	9:00	110,1268	0,1300	0,1297	35,0948	107,7340	0,1287	0,1305	35,5713	0,1264

		SYSTEM 1 – 1st hour				SYSTEM 1				
Post-test Weight Record		Probe & Housing Number	Front Filter Number	Back Filter Number	gaskets	Probe & Housing Number	Front Filter Number	Back Filter Number	gaskets	Blanck
Date	Time	31	58	59	7	36	60	61	33	64
2019-03-21	14:00	110,1269	0,1309	0,1287	35,0979	107,7341	0,1283	0,1297	35,5737	0,1267
2019-03-25	8:00	110,1269	0,1305	0,1287	35,0977	107,7341	0,1284	0,1297	35,5731	0,1264
2019-04-01	8:00	110.1269	0,1304	0,1287	35,0967	107.7341	0,1284	0,1297	35.5730	0,1264
2019-04-02	8:00	110.1269	0,1304	0,1287	35,0967	107.7341	0,1284	0,1297	35.5730	0,1264

POLYTESTS
TESTING THROUGH YOUR REALITY

DILUTION TUNNEL PARTICULATE SAMPLER DATA

Date: 2019-03-20 Manufacturer: Hearthstone Model: GM 40

Project #: pI 20189 Run: 4 Tech: MM Reviewer: BP

		SYSTEM 2			
Pre-test Weight Record		Probe & Housing Number	Front Filter Number	Back Filter Number	gaskets
Date	Time	39	62	63	37
2019-03-20	17:00	110, 2770	0,1281	0,1282	34, 3879
2019-03-21	9:30	110, 2771	0,1282 ~~0,1284~~ MM	0,1283	34, 3879

		SYSTEM 2			
Post-test Weight Record		Probe & Housing Number	Front Filter Number	Back Filter Number	gaskets
Date	Time	39	62	63	37
2019-03-21	14:00	110 2772	01289	0 1266	34, 3919
2019.03.25	8:00	110 2772	0,1286	0,1266	34, 3908
2019.04.01	8:00	110.2772	0,1287	0,1267	34,3908
2019.04.02	8:00	110,2772	0,1287	0,1267	34.3908

Paramètres

Tous les facteurs de corrections et autres paramètres qui peuvent être modifiés par l'utilisateur du fichier sont regroupés ici.

Code verrouillage:	HEA

Description du test

Test standard	EPA	
Run #	4	
Date	21-03-2019	
Technicien	M.M	
Project #	PI 20189	

Description de l'unité

Manufacturier	HEARTHSTONE	
Modèle	GM40	
Combustion system	Cat	
Appliance type	WOODSTOVE	
Firebox volume	1,31	cu ft.
Appliance weight empty	N.A	lbs
Appliance weight full	N.A	lbs

Paramètres du test

Logging time	1	min
Manufacturer's rated heat output	N.A	BTU/h Donnée fournie par le manfacturier
Targeted category	1	
Targeted output	N.A	BTU/h
Cp steel	N.A	BTU/lb-°F

Échantillonnage

Blank sampling rate	0,20	cuft/min
Internal probe diameter	0,18	in.
Calibration Factor (DGM #1):	1,001	Dimensionless
Equipment number (DGM #1):	EM 178	
Calibration Factor (DGM #2):	0,987	Dimensionless
Equipment number (DGM #2):	EM 178	
Calibration Factor (DGM #3):	0,996	
Equipment number (DGM #3):	EM 070	Dimensionless

Tunnel

Targeted tunnel flow rate	140	scfm
Tunnel diameter	6	in.
Molecular weight	29	
Pitot tube type	Standard	
Pitot tube coefficient	0,99	Dimensionless

Project nu.	PI 20189
Date	21-03-2019
Technicien	M.M

Fuel data

Fuel type	Dimension	
Fuel specie	D. Fir	
HHV	19810,0	kJ/kg
%C	48,7	
%H	6,9	
%O	43,9	
%Ash	0,5	
HHV	8519,2	Btu/lb
LHV	7451,0	Btu/lb

Default Fuel Values

	D. Fir	Oak/Maple
HHV	19 810	19 887
%C	48,73	50
%H	6,87	6,6
%O	43,9	42,9
%Ash	0,5	0,5
HHV (Btu/lb)	8519	8552
LHV (Btu/lb)	7451	7480

	Start	End
Barometer (kPa):	101,8	101,5
Barometer (in.Hg):	30,061529	29,97293872
Dry Bulb (F):	70,16	74,84
Humidity (%):	25,4	27,8
Air velocity (ft/min)	0	0

DGM #1	Final:	31010,907	cuft	Final:	878131,070	Liter
	Initial:	30975,528	cuft	Initial:	877129,250	Liter
DGM #2	Final:	29242,016	cuft	Final:	828041,660	Liter
	Initial:	29207,231	cuft	Initial:	827056,650	Liter

DGM room				Final:	683,280	cuft
				Initial:	637,440	cuft

Numéro de la ligne dans "Raw data" à partir duquel les données du VRAI test commencent: 203

Autres données à rentrer: dans preload data, load data, traverse et filter set weight

Project nu.	PI 20189
Date	21-03-2019
Technicien	M.M

Preload data sheet

Test Load Weight:

Lower	Ideal	Upper
8,25	9,17	10,09

Load Volume: 0,3403 cu. ft

Loading Density: 9,699 lbs./ft3

Number of Spaces:

Load Density (wet): 37,340 lbs./ft3

Spacer weight (lbs):

Dry Wood Density: 31,029808

Piece Size (in): Thick	Wide	x Length	Weight lbs	Meter Moisture Content Dry Uncorrected %					Ave. MC x Weight	Volume Cubic Inches
1,5	3,5	8	0,786	20,6	20,4	20	20,3	20,2	15,9558	42,00
1,5	3,5	8	0,916	20,8	20	20,1	20,4	20,3	18,61312	42,00
1,5	3,5	8	0,91	20	20,6	20,8	20,9	19,9	18,6004	42,00
1,5	3,5	8	0,91	19,8	19,6	20,1	19,9	19,8	18,0544	42,00
1,5	3,5	8	0,916	20,6	20,4	20,8	20,9	21	18,99784	42,00
1,5	3,5	8	0,916	19,9	19,8	20,1	20,4	20,3	18,4116	42,00
1,5	3,5	8	0,896	20,3	20,9	20,6	20,8	20,7	18,51136	42,00
1,5	3,5	8	0,904	19,6	19,2	19,3	19,2	19,5	17,50144	42,00
1,5	3,5	8	0,902	19,8	19,7	19,5	19,4	19,3	17,62508	42,00
1,5	3,5	8	0,916	20	20,2	20,4	20,6	20,8	18,6864	42,00
1,5	3,5	8	0,956	19,9	21,1	21,6	20,9	20,3	19,84656	42,00
1,5	3,5	8	0,92	20,3	20,4	20,6	20,4	20,8	18,86	42,00
1,5	3,5	8	0,94	21	21,4	21	21	21,3	19,8716	42,00
1,5	3,5	8	0,918	20,6	20,3	20,8	20,4	20,6	18,85572	42,00
										0,00
										0,00
										0,00
										0,00
										0,00
										0,00
										0,00
										0,00
										0,00
										0,00
										0,00
										0,00
										0,00
										0,00
										0,00
										0,00
										0,00
										0,00
								SUM MC:	258,39132	

PreTest Load Weight: 12,71 lbs.

Dry Weight: 4,79 kg.

Average Moisture Content: %

Dry: 20,34

20,34
Must be 18-28

Wet: 16,90
must be 15,2-22

Project nu.	PI 20189
Date	21-03-2019
Technicien	M.M

FUEL LOAD DATA SHEET, CSA B415

Test Load Weight:

Lower	Ideal	Upper
8,3	9,2	10,1

* For boilers, a loading density factor of 10 lb/ft3 is applied

Load Volume: 0,21 cu. ft

Loading Density: 7,1 lbs./ft3

Number of Spaces: 16

Spacer weight: lbs

Load Density (wet): 36,4 lbs./ft3

Dry Wood Density: 30,3 lbs./ft3

Piece Size (in): Thick	Wide	Length	Weight lbs	Meter Moisture Content Dry Uncorrected %					Ave. MC x Weight	Volume Cubic Inches	Ave. MC %
1,5	3,5	13,5	1,55	19,10	19,30	19,20	19,60	19,40	29,90736	70,88	19,3
1,5	3,5	13,5	1,47	19,80	19,60	20,10	20,40	20,80	29,56552	70,88	20,1
1,5	3,5	13,5	1,48	20,10	20,30	20,80	20,50	20,60	30,23988	70,88	20,5
1,5	3,5	13,5	1,62	20,60	20,90	21,00	21,40	20,80	33,96468	70,88	20,9
1,5	3,5	13,5	1,35	19,30	19,80	19,60	19,70	19,80	26,55328	70,88	19,6
1,5	0,75	5	0,11			19,10			2,0628	5,63	19,1
1,5	0,75	5	0,10			19,60			1,9208	5,63	19,6
1,5	0,75	5	0,13			19,50			2,457	5,63	19,5
1,5	0,75	5	0,10			19,90			1,9502	5,63	19,9
1,5	0,75	5	0,11			19,90			2,189	5,63	19,9
1,5	0,75	5	0,13			19,30			2,5476	5,63	19,3
1,5	0,75	5	0,12			19,20			2,3808	5,63	19,2
1,5	0,75	5	0,11			20,10			2,1708	5,63	20,1
1,5	0,75	5	0,10			19,90			2,0298	5,63	19,9
1,5	0,75	5	0,10			19,30			1,8528	5,63	19,3
1,5	0,75	5	0,10			19,80			1,98	5,63	19,8
1,5	0,75	5	0,11			19,30			2,1616	5,63	19,3
1,5	0,75	5	0,11			19,90			2,1492	5,63	19,9
1,5	0,75	5	0,13			19,60			2,548	5,63	19,6
1,5	0,75	5	0,134			20,10			2,6934	5,63	20,1
1,5	0,75	5	0,11			20,00			2,2	5,63	20,0
										0,00	
										0,00	
										0,00	
										0,00	
										0,00	
										0,00	
										0,00	
										0,00	
										0,00	
								SUM MCx	185,52452		19,8 %

Test Load Weight: 9,26 lbs.

Dry Weight: 3,50 kg.

Average Moisture Content: %

Dry: 20,03 Dry(EPA) 20,03 Dry(B415 20,03

20,03 Must be 19-25

Wet: 16,68 must be 15,2-22

Coal Bed Range: 1,9 lbs. to 2,3 lbs.

TEST CHARGE:

Coal bed weight: 2,4 lbs.

Project nu.	PI 20189
Date	21-03-2019
Technicien	M.M

Tunnel Traverse Worksheet (for velocity calculations)

Static Pressure: 0,34 in. H20
Barometer: 29,900 in. Hg

Pour un tunnel de 12" et plus, prendre 6 lectures

	TUNNEL VELOCITY	TUNNEL TEMP	SQUARE ROOT
	In. wc	°F	
A center			0,0000
B center			0,0000
A1			0,0000
A2			0,0000
A3			0,0000
A4			0,0000
A5			0,0000
A6			0,0000
B1			0,0000
B2			0,0000
B3			0,0000
B4			0,0000
B5			0,0000
B6			0,0000
AVERAGE	#DIV/0!	#DIV/0!	0,0000

PITOT CONSTANT=
0,932

Pour un tunnel moins de 12", prendre 4 lectures

	TUNNEL VELOCITY	TUNNEL TEMP	SQUARE ROOT
	In. wc	°F	
A center	0,062	69,55	0,2490
B center	0,062	67,88	0,2490
A1	0,050	68,99	0,2236
A2	0,053	68,32	0,2302
A3	0,052	67,97	0,2280
A4	0,049	67,87	0,2214
B1	0,050	67,950	0,2236
B2	0,056	67,950	0,2366
B3	0,055	67,800	0,2345
B4	0,050	68,010	0,2236
AVERAGE	0,0539	68,2290	0,2320

Project nu.	PI 20189
Date	21-03-2019
Technicien	M.M

Filter set weight

	System 1 (g) 1st hour				System 1 (g)				System 2 (g)				Ambient blank (g)	Date	Heure
	probe	front	back	gasket	probe	front	back	gasket	probe	front	back	gasket	Filter		
Number	31	58	59	7	36	60	61	33	39	62	63	37	64		
Before (1)															
Before (2)															
Before (3)															
Before (4)															
Before (5)	110,1269	0,1300	0,1297	35,0949	107,7339	0,1288	0,1304	35,5712	110,2770	0,1281	0,1282	34,3879	0,1263	2019-03-20	17:00
Before (6)	110,1268	0,1300	0,1297	35,0948	107,7340	0,1287	0,1305	35,5713	110,2771	0,1282	0,1283	34,3879	0,1264	2019-03-21	09:00
After (1)	110,1269	0,1309	0,1287	35,0979	107,7341	0,1283	0,1297	35,5737	110,2772	0,1289	0,1266	34,3919	0,1267	2019-03-21	14:00
After (2)	110,1269	0,1305	0,1287	35,0977	107,7341	0,1284	0,1297	35,5731	110,2772	0,1286	0,1266	34,3908	0,1264	2019-03-25	08:00
After (3)	110,1269	0,1304	0,1287	35,0967	107,7341	0,1284	0,1297	35,5730	110,2772	0,1287	0,1267	34,3908	0,1264	2019-04-01	08:00
After (4)	110,1269	0,1304	0,1287	35,0967	107,7341	0,1284	0,1297	35,5730	110,2772	0,1287	0,1267	34,3908	0,1264	2019-04-02	08:00
After (5)															
After (6)	110,1269	0,1304	0,1287	35,0967	107,7341	0,1284	0,1297	35,5730	110,2772	0,1287	0,1267	34,3908	0,1264	2019-04-02	08:00
Difference	0,0001	0,0004	-0,0010	0,0019	0,0001	-0,0003	-0,0008	0,0017	0,0001	0,0005	-0,0016	0,0029	0,0000		
Total (mg)		1,4				2,1				1,9			0		
Total ajusté (mg)		**1,40**				**2,10**				**1,90**					

Project nu.	PI 20189
Date	21-03-2019
Technicien	M.M

demonstration purpose only not the compliance number

Filter set weight

	System 1 (g) 1st hour				System 1 (g)				System 2 (g)				Ambient blank (g)	Date	Heure
	probe	front	back	gasket	probe	front	back	gasket	probe	front	back	gasket	Filter		
Number	31	58	59	7	36	60	61	33	39	62	63	37	64		
Before (1)															
Before (2)															
Before (3)															
Before (4)															
Before (5)	110,1269	0,1300	0,1297	35,0949	107,7339	0,1288	0,1304	35,5712	110,2770	0,1281	0,1282	34,3879	0,1263	2019-03-20	17:00
Before (6)	110,1268	0,1300	0,1297	35,0948	107,7340	0,1287	0,1305	35,5713	110,2771	0,1282	0,1283	34,3879	0,1264	2019-03-21	09:00
After (1)	110,1269	0,1309	0,1287	35,0979	107,7341	0,1283	0,1297	35,5737	110,2772	0,1289	0,1266	34,3919	0,1267	2019-03-21	14:00
After (2)	110,1269	0,1305	0,1287	35,0977	107,7341	0,1284	0,1297	35,5731	110,2772	0,1286	0,1266	34,3908	0,1264	2019-03-25	08:00
After (3)	110,1269	0,1304	0,1287	35,0967	107,7341	0,1284	0,1297	35,5730	110,2772	0,1287	0,1267	34,3908	0,1264	2019-04-01	08:00
After (4)	110,1269	0,1304	0,1287	35,0967	107,7341	0,1284	0,1297	35,5730	110,2772	0,1287	0,1267	34,3908	0,1264	2019-04-02	08:00
After (5)															
After (6)	110,1269	0,1304	0,1297	35,0967	107,7341	0,1287	0,1305	35,5730	110,2772	0,1287	0,1283	34,3908	0,1264	2019-04-02	08:00
Difference	0,0001	0,0004	0,0000	0,0019	0,0001	0,0000	0,0000	0,0017	0,0001	0,0005	0,0000	0,0029	0,0000		
Total (mg)		2,4				4,2				3,5			0		
Total ajusté (mg)		**2,40**				**4,20**				**3,50**					

Project nu.	PI 20189
Date	21-03-2019
Technicien	M.M

negative filter weight rounded to zero, emission rate 1,2g/hr

*		*	*	*	*	*1	*2	*3	*4	*5	*6	*7	*8	*	Mass flow 1	DGM 1	DGM 1	Filter 1	Mass flow 2	DGM 2	DGM 2	Filter 2
Elapsed		Weight				Flue	Room	Tunnel	Unit	Unit	Unit	Unit	Unit	Catalyst	Reading	Inlet T	Outlet T	Temp	Reading	Inlet T	Outlet T	Temp
Time	Raw data row	Remaining	CO	CO_2	O_2	Gas	Temp	Dry Bulb	Top	Back	R.Side	L.Side	Bottom	up								
min		lbs	%	%	%	°F	°F	°F	°F	°F	°F	°F	°F	°F	cuft/min	oF	oF	oF	cuft/min	oF	oF	oF
0,00	203,00	9,3	0,1	2,7	0,0	259,5	69,0	100,8	319,7	314,4	337,3	335,6	434,7	531,7	0,19	71,73	71,55	70,85	0,18	71,99	71,97	71,07
1,0	204,0	9,3	0,1	1,4	0,0	275,1	69,0	90,3	316,3	314,0	336,0	334,6	432,2	491,1	0,19	71,79	71,53	70,91	0,19	72,00	71,95	71,12
2,0	205,0	9,2	0,0	1,8	0,0	290,2	68,9	90,5	313,7	312,4	334,4	332,8	429,2	527,4	0,19	71,81	71,53	70,99	0,19	71,99	71,96	71,19
3,0	206,0	9,1	0,0	5,0	0,0	308,5	69,0	91,1	313,7	311,8	332,8	331,9	426,4	579,3	0,19	71,81	71,53	71,02	0,19	71,98	71,96	71,24
4,0	207,0	9,0	0,0	5,1	0,0	323,9	69,2	92,8	314,5	310,2	331,4	330,9	423,6	612,5	0,19	71,84	71,53	71,12	0,19	71,98	71,97	71,38
5,0	208,0	8,8	0,0	7,1	0,0	345,4	69,1	95,7	322,8	309,1	329,3	329,2	420,7	686,4	0,19	71,92	71,54	71,30	0,19	72,00	71,98	71,80
6,0	209,0	8,7	0,0	12,5	0,0	311,8	69,1	87,9	331,4	308,8	327,6	328,2	417,8	690,4	0,19	71,99	71,55	71,22	0,19	72,03	72,00	71,42
7,0	210,0	8,7	0,0	7,8	0,0	288,0	69,1	85,3	333,4	307,7	326,2	327,2	415,3	657,5	0,19	71,91	71,54	71,28	0,19	72,00	72,00	71,51
8,0	211,0	8,6	0,0	5,2	0,0	273,1	69,2	84,3	332,3	306,7	325,2	326,1	413,1	617,9	0,19	71,79	71,51	71,38	0,19	71,93	71,97	71,61
9,0	212,0	8,5	0,0	5,3	0,0	264,7	69,1	83,9	331,1	305,0	323,3	324,6	410,9	610,8	0,19	71,75	71,51	71,47	0,19	71,90	71,97	71,69
10,0	213,0	8,5	0,0	5,9	0,0	262,1	69,1	83,9	330,1	303,3	321,8	323,1	408,4	636,0	0,19	71,81	71,54	71,54	0,19	71,93	71,99	71,77
11,0	214,0	8,4	0,0	7,1	0,0	263,4	69,1	83,8	329,5	302,8	319,9	321,5	405,8	670,6	0,19	71,76	71,53	71,60	0,19	71,90	71,99	71,83
12,0	215,0	8,3	0,0	8,0	0,0	267,9	69,2	84,0	329,4	300,6	318,3	320,2	402,9	722,9	0,19	71,75	71,54	71,68	0,18	71,88	72,00	71,92
13,0	216,0	8,2	0,0	8,2	0,0	270,7	69,1	84,0	329,7	299,1	316,5	318,4	400,5	727,1	0,19	71,74	71,55	71,75	0,19	71,89	72,03	72,01
14,0	217,0	8,1	0,0	7,2	0,0	272,8	69,2	84,0	329,9	298,6	314,7	316,4	397,6	719,9	0,19	71,70	71,55	71,84	0,19	71,88	72,04	72,06
15,0	218,0	8,0	0,0	8,0	0,0	276,9	69,1	84,6	330,8	296,8	313,0	314,7	395,0	731,4	0,19	71,68	71,56	71,94	0,18	71,87	72,07	72,14
16,0	219,0	7,9	0,0	9,6	0,0	284,7	69,1	85,9	334,7	295,7	311,0	313,5	392,1	713,9	0,19	71,66	71,56	72,04	0,19	71,87	72,09	72,29
17,0	220,0	7,8	0,3	15,8	0,0	296,4	69,1	87,0	343,0	295,1	309,7	312,2	389,3	746,8	0,19	71,67	71,56	72,12	0,19	71,88	72,09	72,44
18,0	221,0	7,6	0,3	16,7	0,0	304,2	69,0	87,4	353,6	294,5	308,9	311,4	386,5	765,1	0,19	71,69	71,56	72,14	0,19	71,86	72,09	72,51
19,0	222,0	7,5	0,2	16,7	0,0	308,4	69,1	86,7	365,6	294,2	308,7	311,5	383,8	782,5	0,19	71,72	71,58	72,20	0,19	71,85	72,09	72,50
20,0	223,0	7,3	0,2	13,8	0,0	306,5	69,2	87,1	375,3	294,7	308,7	311,8	380,9	745,3	0,19	71,76	71,57	72,22	0,19	71,88	72,11	72,36
21,0	224,0	7,2	0,0	12,2	0,0	304,8	69,2	86,7	383,3	294,0	308,8	312,1	378,7	722,4	0,19	71,75	71,58	72,33	0,19	71,87	72,12	72,49
22,0	225,0	7,1	0,0	11,5	0,0	304,5	69,1	86,2	389,5	294,7	308,9	312,2	375,9	724,3	0,19	71,79	71,59	72,40	0,19	71,88	72,11	72,61
23,0	226,0	7,0	0,0	11,8	0,0	304,2	69,3	86,4	394,8	293,6	309,5	313,0	373,4	721,9	0,19	71,84	71,59	72,43	0,19	71,89	72,13	72,67
24,0	227,0	6,9	0,0	11,9	0,0	303,4	69,3	86,8	398,7	292,8	310,1	313,5	370,8	721,0	0,19	71,91	71,61	72,52	0,18	71,93	72,12	72,76
25,0	228,0	6,8	0,0	12,6	0,0	302,2	69,3	86,9	402,4	291,9	310,7	313,7	368,1	736,6	0,19	71,98	71,62	72,59	0,19	72,00	72,15	72,82
26,0	229,0	6,7	0,0	13,4	0,0	302,2	69,3	86,4	407,2	292,1	311,1	313,9	365,7	730,7	0,19	72,04	71,65	72,64	0,19	72,05	72,19	72,88
27,0	230,0	6,6	0,0	14,5	0,0	303,5	69,3	87,1	413,0	290,9	312,2	314,5	363,7	730,2	0,19	72,03	71,64	72,69	0,19	72,04	72,19	72,91
28,0	231,0	6,5	0,0	15,4	0,0	306,5	69,3	87,2	419,4	291,7	313,5	315,2	361,3	752,2	0,19	72,04	71,63	72,75	0,19	72,04	72,20	72,98
29,0	232,0	6,3	0,0	15,8	0,0	309,8	69,4	87,6	426,1	291,4	314,8	316,5	359,3	784,7	0,19	72,11	71,66	72,81	0,19	72,08	72,20	73,08
30,0	233,0	6,2	0,2	16,5	0,0	316,0	69,4	88,1	433,1	291,4	316,5	317,5	357,4	812,9	0,19	72,11	71,65	72,88	0,19	72,08	72,20	73,11
31,0	234,0	6,1	0,6	17,0	0,0	322,2	69,4	88,3	441,5	291,8	318,7	319,5	355,7	822,1	0,19	72,10	71,66	72,92	0,19	72,07	72,19	73,18
32,0	235,0	5,9	0,7	17,5	0,0	328,5	69,5	88,8	450,2	292,6	320,4	321,3	353,9	821,2	0,19	72,09	71,68	72,98	0,19	72,08	72,20	73,25
33,0	236,0	5,8	0,3	17,4	0,0	332,1	69,7	89,3	459,6	293,2	322,6	323,6	352,1	825,0	0,19	72,13	71,70	73,04	0,19	72,08	72,22	73,31
34,0	237,0	5,7	0,2	17,4	0,0	334,7	69,7	89,1	467,3	295,4	324,9	326,2	349,3	838,3	0,19	72,17	71,70	73,11	0,18	72,12	72,20	73,33
35,0	238,0	5,5	0,5	17,2	0,0	337,8	69,7	89,3	475,4	295,7	327,3	328,4	347,5	840,6	0,19	72,19	71,72	73,15	0,19	72,13	72,23	73,40
36,0	239,0	5,4	0,8	17,2	0,0	339,9	69,8	89,7	483,3	296,3	330,0	331,1	345,7	844,9	0,19	72,25	71,73	73,20	0,19	72,14	72,23	73,46
37,0	240,0	5,3	0,9	17,2	0,0	342,2	69,8	89,6	490,4	297,4	332,6	333,8	343,7	847,2	0,19	72,33	71,75	73,29	0,19	72,18	72,26	73,54
38,0	241,0	5,1	1,0	17,3	0,0	344,6	70,0	90,5	496,9	299,7	335,3	336,4	342,1	843,3	0,19	72,44	71,78	73,35	0,19	72,25	72,26	73,61
39,0	242,0	5,0	0,3	17,4	0,0	346,4	70,0	90,2	503,3	301,1	337,5	339,2	339,6	839,2	0,19	72,50	71,82	73,41	0,19	72,30	72,30	73,67
40,0	243,0	4,9	0,3	17,4	0,0	348,0	70,1	90,7	510,3	303,4	340,1	342,2	337,4	841,7	0,19	72,59	71,85	73,46	0,19	72,37	72,34	73,72
41,0	244,0	4,7	0,4	17,3	0,0	349,3	70,1	90,8	516,3	304,4	343,3	345,1	336,0	841,2	0,19	72,61	71,86	73,53	0,19	72,40	72,34	73,78
42,0	245,0	4,6	0,4	17,3	0,0	349,4	70,1	90,9	522,3	307,4	346,1	348,1	334,6	843,3	0,19	72,63	71,87	73,57	0,19	72,42	72,38	73,83
43,0	246,0	4,4	0,3	17,5	0,0	348,8	70,3	90,9	527,5	308,3	348,8	351,0	333,2	838,4	0,19	72,68	71,88	73,61	0,19	72,47	72,40	73,90
44,0	247,0	4,3	0,4	17,4	0,0	348,6	70,4	91,2	533,0	311,2	351,7	354,1	332,0	839,7	0,19	72,75	71,91	73,71	0,19	72,53	72,43	73,98
45,0	248,0	4,2	0,4	17,3	0,0	349,6	70,1	91,0	538,6	314,4	354,8	356,2	330,5	835,4	0,19	72,82	71,93	73,78	0,19	72,56	72,44	74,04
46,0	249,0	4,1	0,5	17,2	0,0	350,5	70,4	91,5	544,4	316,3	357,4	360,9	328,2	838,5	0,19	72,91	71,97	73,84	0,19	72,62	72,46	74,12
47,0	250,0	3,9	0,5	17,1	0,0	349,2	70,4	91,1	549,6	319,2	360,4	363,9	326,4	835,0	0,19	72,92	71,97	73,89	0,19	72,62	72,49	74,16
48,0	251,0	3,8	0,5	17,1	0,0	346,9	70,6	91,6	554,9	321,8	363,3	367,1	324,8	828,2	0,19	72,96	71,99	73,95	0,19	72,67	72,49	74,22
49,0	252,0	3,7	0,5	17,0	0,0	345,7	70,7	91,0	558,6	323,5	366,3	370,4	323,7	827,4	0,19	73,02	72,01	73,98	0,19	72,73	72,52	74,26
50,0	253,0	3,6	0,3	17,0	0,0	345,2	70,6	91,0	562,6	326,3	369,5	373,4	322,1	838,0	0,19	73,08	72,03	74,06	0,19	72,75	72,55	74,37
51,0	254,0	3,5	0,2	17,1	0,0	344,7	70,7	90,7	564,6	328,6	372,7	376,7	320,2	855,3	0,19	73,10	72,07	74,12	0,19	72,78	72,56	74,40
52,0	255,0	3,4	0,4	16,9	0,0	344,8	70,8	90,6	566,0	330,8	375,7	379,8	318,6	860,1	0,19	73,12	72,08	74,20	0,19	72,82	72,56	74,50
53,0	256,0	3,3	0,7	16,9	0,0	345,3	70,7	90,7	567,1	332,6	378,7	382,9	316,8	866,0	0,19	73,15	72,10	74,24	0,19	72,84	72,59	74,54
54,0	257,0	3,2	0,8	16,9	0,0	346,7	70,8	90,8	569,1	334,5	381,9	385,9	315,1	863,7	0,19	73,21	72,12	74,30	0,19	72,89	72,62	74,63
55,0	258,0	3,1	0,9	17,0	0,0	346,8	70,4	90,5	569,7	336,8	384,6	388,6	313,5	865,9	0,19	73,20	72,14	74,33	0,19	72,90	72,66	74,71
56,0	259,0	3,0	0,6	16,8	0,0	346,2	70,6	90,2	571,2	337,5	387,0	391,7	312,2	870,6	0,19	73,23	72,15	74,33	0,19	72,94	72,66	74,69
57,0	260,0	2,9	0,3	16,6	0,0	345,6	70,5	90,9	573,1	339,5	389,6	394,9	310,8	872,9	0,19	73,28	72,17	74,34	0,18	72,96	72,68	74,75
58,0	261,0	2,8	0,1	16,5	0,0	344,1	70,1	90,8	573,6	341,3	392,6	397,3	309,9	870,8	0,19	73,29	72,18	74,37	0,19	72,96	72,70	74,80
59,0	262,0	2,7	0,1	16,1	0,0	342,8	70,5	90,3	572,7	342,3	394,7	400,0	309,4	868,4	0,19	73,39	72,20	74,40	0,19	72,99	72,71	74,84
60,0	263,0	2,6	0,1	16,1	0,0	342,0	70,5	90,1	573,6	342,7	397,3	402,1	308,1	864,6	0,19	73,44	72,21	74,45	0,18	73,03	72,73	71,45
61,0	264,0	2,6	0,1	16,0	0,0	341,2	70,6	90,4	572,9	343,7	399,4	405,1	307,1	861,7	0,19	73,45	72,24	74,47	0,19	73,05	72,73	71,91
62,0	265,0	2,5	0,1	16,3	0,0	339,5	70,6	90,3	571,9	344,2	401,8	407,8	307,0	852,0	0,19	73,47	72,27	74,50	0,19	73,09	72,75	72,21
63,0	266,0	2,4	0,0	16,1	0,0	337,8	70,8	90,0	571,3	344,9	403,9	410,6	306,7	843,4	0,19	73,47	72,30	74,56	0,19	73,13	72,79	72,39
64,0	267,0	2,3	0,1	16,1	0,0	335,6	70,8	90,2	569,4	346,6	406,4	412,7	306,6	834,4	0,19	73,48	72,29	74,60	0,19	73,16	72,80	72,62
65,0	268,0	2,3	0,1	15,8	0,0	332,7	70,6	90,1	566,5	347,9	408,7	415,3	306,2	825,1	0,19	73,50	72,31	74,64	0,19	73,17	72,82	72,80
66,0	269,0	2,2	0,1	15,7	0,0	329,9	70,8	89,8	563,7	348,6	410,6	417,5	306,2	831,0	0,19	73,52	72,34	74,67	0,19	73,18	72,82	72,99
67,0	270,0	2,1	0,0	15,5	0,0	327,4	70,8	89,5	559,9	349,7	412,2	419,7	306,4	830,0	0,19	73,53	72,35	74,71	0,19	73,16	72,84	73,15
68,0	271,0	2,1	0,0	15,5	0,0	324,5	70,9	88,9	556,5	351,4	414,6	422,0	306,2	817,2	0,19	73,56	72,36	74,72	0,19	73,20	72,86	73,29
69,0	272,0	2,0	0,0	15,1	0,0	319,9	70,7	89,1	553,7	352,6	416,3	423,8	306,5	803,4	0,19	73,53	72,38	74,78	0,19	73,19	72,86	73,43
70,0	273,0	2,0	0,0	14,6	0,0	315,2	70,9	88,7	550,9	353,1	418,5	425,9	306,7	787,1	0,19	73,56	72,41	74,82	0,19	73,21	72,87	73,58
71,0	274,0	1,9	0,0	13,6	0,0	309,0	70,7	88,0	546,4	355,8	420,8	427,8	307,3	761,5	0,19	73,55	72,40	74,85	0,19	73,20	72,89	73,71
72,0	275,0	1,9	0,0	12,7	0,0	302,7	70,7	87,6	541,4	356,6	422,0	429,8	307,4	730,3	0,19	73,55	72,42	74,87	0,19	73,22	72,89	73,82
73,0	276,0	1,9	0,0	11,6	0,0	297,0	71,0	87,3	535,8	358,4	424,5	431,1	308,5	714,2	0,19	73,57	72,43	74,87	0,19	73,23	72,92	73,92
74,0	277,0	1,9	0,0	11,0	0,0	292,9	70,9	86,9	529,2	358,7	426,4	432,5	309,1	707,1	0,19	73,58	72,44	74,90	0,19	73,24	72,93	74,00
75,0	278,0	1,8	0,0	10,8	0,0	288,5	70,7	86,6	522,1	358,7	428,4	433,6	309,7	702,8	0,19	73,54	72,47	74,90	0,19	73,24	72,94	74,11
76,0	279,0	1,8	0,0	10,7	0,0	284,8	70,4	86,4	515,4	358,2	429,3	434,7	310,2	700,6	0,19	73,54	72,48	74,90	0,19	73,24	72,95	74,18
77,0	280,0	1,8	0,0	10,6	0,0	281,4	70,7	85,9	508,7	358,2	430,5	435,4	311,3	698,1	0,19	73,54	72,49	74,92	0,19	73,25	72,94	74,24
78,0	281,0	1,8	0,0	10,6	0,0	278,9	70,6	85,9	502,0	358,1	431,4	435,6	312,0	701,8	0,19	73,51	72,47	74,90	0,19	73,24	72,97	74,30
79,0	282,0	1,7	0,0	10,5	0,0	276,9	70,6	85,6	496,2	358,3	432,0	435,9	313,1	701,8	0,19	73,52	72,50	74,87	0,19	73,26	72,98	74,37
80,0	283,0	1,7	0,0	10,4	0,0	274,6	70,6	85,4	490,2	357,6	431,9	435,9	314,0	700,9	0,19	73,47	72,49	74,87	0,19	73,25	72,96	74,42
81,0	284,0	1,7	0,0	10,3	0,0	273,0	70,6	85,5	484,3	357,4	432,3	436,0	314,8	701,5	0,19	73,45	72,51	74,86	0,19	73,21	72,96	74,46
82,0	285,0	1,7	0,0	10,3	0,0	270,8	70,6	85,2	478,3	356,5	432,0	435,6	316,0	698,0	0,19	73,43	72,52	74,85	0,19	73,19	72,94	74,50
83,0	286,0	1,6	0,0	10,3	0,0	269,2	70,6	84,6	472,7	355,0	431,8	435,3	317,2	697,8	0,19	73,39	72,51	74,87	0,18	73,16	72,97	74,58
84,0	287,0	1,6	0,0	10,3	0,0	268,0	70,5	84,6	467,5	353,5	431,2	434,7	318,2	698,2	0,19	73,36	72,51	74,84	0,19	73,16	72,98	74,59
85,0	288,0	1,6	0,0	10,3	0,0	266,3	70,4	84,8	462,4	352,7	431,0	434,0	319,4	695,2	0,19	73,36	72,53	74,85	0,19	73,17	72,98	74,63
86,0	289,0	1,6	0,0	10,4	0,0	264,9	70,4	84,1	457,1	352,4	430,4	433,2	320,2	693,8	0,19	73,40	72,54	74,83	0,19	73,18	73,00	74,65
87,0	290,0	1,6	0,0	10,3	0,0	263,3	70,6	84,5	452,5	352,1	429,4	432,5	321,3	690,7	0,19	73,47	72,56	74,80	0,19	73,20	73,02	74,64
88,0	291,0	1,5	0,0	10,4	0,0	262,1	70,5	84,1	448,4	350,6	428,9	431,7	323,0	689,4	0,19	73,45	72,59	74,78	0,19	73,21	73,04	74,66

89,0	292,0	1,5	0,0	10,4	0,0	260,4	70,5	84,4	443,9	350,1	428,0	430,8	323,5	687,5	0,19	73,37	72,56	74,78	0,19	73,21	73,04	74,69
90,0	293,0	1,5	0,0	10,4	0,0	258,7	70,5	84,1	440,1	348,8	427,6	430,0	325,1	686,9	0,19	73,40	72,61	74,73	0,19	73,24	73,07	74,70
91,0	294,0	1,5	0,0	10,3	0,0	257,5	70,4	84,1	435,7	347,9	426,9	428,8	326,1	683,6	0,19	73,36	72,63	74,70	0,19	73,22	73,10	74,72
92,0	295,0	1,5	0,0	10,4	0,0	256,3	70,5	84,0	431,7	347,0	425,5	427,8	327,3	681,7	0,19	73,34	72,62	74,71	0,19	73,24	73,12	74,72
93,0	296,0	1,4	0,0	10,4	0,0	255,6	70,6	83,7	428,1	345,6	424,6	427,0	328,4	682,0	0,19	73,31	72,62	74,70	0,19	73,21	73,11	74,70
94,0	297,0	1,4	0,0	10,5	0,0	254,5	70,6	83,5	425,2	344,9	424,1	425,5	329,8	679,8	0,19	73,27	72,63	74,66	0,19	73,21	73,13	74,72
95,0	298,0	1,4	0,0	10,4	0,0	253,6	70,7	83,6	421,7	343,4	422,7	424,6	330,8	677,9	0,19	73,22	72,62	74,63	0,19	73,19	73,11	74,74
96,0	299,0	1,4	0,0	10,5	0,0	252,6	70,6	83,3	418,7	343,4	422,2	423,4	332,3	676,4	0,19	73,20	72,62	74,64	0,19	73,16	73,11	74,73
97,0	300,0	1,4	0,0	10,4	0,0	251,9	70,5	83,4	415,8	342,2	421,4	422,5	333,7	675,8	0,19	73,17	72,62	74,62	0,19	73,13	73,10	74,72
98,0	301,0	1,3	0,0	10,5	0,0	250,5	70,5	83,4	413,2	342,5	420,2	421,4	334,8	670,0	0,19	73,18	72,61	74,63	0,19	73,10	73,10	74,71
99,0	302,0	1,3	0,0	10,4	0,0	249,5	70,5	83,1	410,3	341,1	419,0	420,3	336,2	667,1	0,19	73,13	72,63	74,59	0,19	73,10	73,09	74,72
100,0	303,0	1,3	0,0	10,4	0,0	248,9	70,6	82,6	408,2	340,0	418,4	419,4	337,2	665,8	0,19	73,12	72,63	74,57	0,19	73,06	73,10	74,69
101,0	304,0	1,3	0,0	10,3	0,0	247,6	70,5	83,0	405,9	339,1	417,7	418,2	338,3	662,6	0,19	73,07	72,62	74,56	0,19	73,03	73,09	74,71
102,0	305,0	1,3	0,0	10,4	0,0	246,7	70,6	82,8	403,4	338,2	416,3	417,0	339,5	662,0	0,19	73,08	72,64	74,58	0,19	73,04	73,10	74,72
103,0	306,0	1,2	0,0	10,3	0,0	246,1	70,6	82,6	401,5	338,0	415,1	416,2	340,4	661,9	0,19	73,06	72,62	74,54	0,19	73,04	73,09	74,68
104,0	307,0	1,2	0,0	10,3	0,0	245,1	70,5	82,7	399,2	336,3	414,4	415,0	341,4	661,5	0,19	73,05	72,61	74,55	0,19	73,01	73,09	74,67
105,0	308,0	1,2	0,0	10,3	0,0	244,8	70,5	82,6	397,5	336,3	413,2	414,4	342,5	661,0	0,19	73,04	72,62	74,54	0,19	73,01	73,09	74,66
106,0	309,0	1,2	0,0	10,3	0,0	244,4	70,5	82,4	395,8	336,6	411,8	413,7	343,3	660,5	0,19	73,02	72,64	74,54	0,19	73,02	73,11	74,65
107,0	310,0	1,2	0,0	10,3	0,0	243,5	70,5	82,4	393,7	336,6	411,0	412,9	344,6	659,7	0,19	73,00	72,63	74,50	0,19	73,01	73,11	74,62
108,0	311,0	1,2	0,0	10,3	0,0	243,3	70,4	82,4	391,8	334,9	410,1	412,0	345,3	658,9	0,19	72,97	72,66	74,49	0,19	72,99	73,12	74,63
109,0	312,0	1,1	0,0	10,2	0,0	242,7	70,2	82,0	389,8	334,9	408,8	410,3	346,1	659,9	0,19	72,95	72,62	74,47	0,19	72,99	73,14	74,61
110,0	313,0	1,1	0,0	10,3	0,0	241,6	70,4	82,1	388,5	334,8	407,5	409,9	346,6	659,9	0,19	72,95	72,65	74,46	0,19	72,99	73,15	74,59
111,0	314,0	1,1	0,0	10,3	0,0	241,0	70,4	82,1	386,8	334,5	406,4	409,3	347,6	656,2	0,19	72,94	72,65	74,37	0,19	72,97	73,14	74,55
112,0	315,0	1,1	0,0	10,2	0,0	240,8	70,3	81,9	385,5	335,7	405,2	408,2	348,3	654,5	0,19	72,89	72,64	74,37	0,19	72,93	73,12	74,55
113,0	316,0	1,1	0,0	10,1	0,0	240,3	70,4	81,9	384,0	335,1	404,0	407,1	349,7	655,2	0,19	72,85	72,64	74,36	0,19	72,92	73,13	74,56
114,0	317,0	1,0	0,0	10,2	0,0	239,7	70,5	82,0	382,5	334,7	403,1	406,7	350,6	654,7	0,19	72,85	72,63	74,34	0,19	72,89	73,14	74,54
115,0	318,0	1,0	0,0	10,2	0,0	239,9	70,5	82,0	381,3	334,8	401,7	405,7	351,6	654,8	0,19	72,83	72,64	74,35	0,19	72,88	73,14	74,55
116,0	319,0	1,0	0,0	10,3	0,0	239,2	70,5	82,0	380,4	333,2	400,9	404,9	352,3	650,6	0,19	72,85	72,62	74,30	0,19	72,88	73,14	74,54
117,0	320,0	1,0	0,0	10,2	0,0	238,5	70,4	81,8	378,9	333,1	399,7	403,9	353,4	649,3	0,19	72,83	72,62	74,31	0,19	72,87	73,14	74,49
118,0	321,0	1,0	0,0	10,2	0,0	238,4	70,5	81,8	377,6	333,8	398,9	403,1	354,4	649,2	0,19	72,84	72,64	74,31	0,19	72,86	73,13	74,50
119,0	322,0	0,9	0,0	10,2	0,0	237,8	70,5	81,7	376,4	332,9	398,4	402,4	355,0	649,3	0,19	72,84	72,64	74,32	0,19	72,87	73,14	74,51
120,0	323,0	0,9	0,0	10,2	0,0	237,5	70,4	81,9	375,4	332,4	397,3	401,7	355,8	649,4	0,19	72,83	72,62	74,30	0,19	72,86	73,14	74,46
121,0	324,0	0,9	0,0	10,2	0,0	237,0	70,4	81,8	374,3	331,8	396,2	400,4	356,4	649,2	0,19	72,83	72,64	74,27	0,19	72,86	73,14	74,44
122,0	325,0	0,9	0,0	10,1	0,0	236,9	70,4	81,6	372,8	331,0	395,6	399,1	357,3	649,0	0,19	72,84	72,65	74,27	0,18	72,87	73,13	74,45
123,0	326,0	0,9	0,0	10,1	0,0	236,4	70,5	81,6	372,1	330,9	394,7	398,8	357,9	649,4	0,19	72,82	72,64	74,27	0,19	72,86	73,14	74,45
124,0	327,0	0,9	0,0	10,1	0,0	236,5	70,5	81,4	371,4	330,9	393,9	398,1	358,3	651,2	0,19	72,82	72,64	74,27	0,18	72,85	73,14	74,43
125,0	328,0	0,8	0,0	10,0	0,0	236,4	70,5	81,5	370,5	330,6	392,6	397,0	358,5	657,1	0,19	72,82	72,64	74,25	0,19	72,87	73,13	74,42
126,0	329,0	0,8	0,0	9,9	0,0	236,3	70,4	81,5	369,3	330,2	392,1	396,7	359,3	657,5	0,19	72,80	72,63	74,24	0,19	72,86	73,14	74,41
127,0	330,0	0,8	0,0	9,8	0,0	236,6	70,4	81,3	368,4	329,7	391,3	396,1	359,7	657,6	0,19	72,81	72,63	74,22	0,19	72,84	73,15	74,42
128,0	331,0	0,8	0,0	9,8	0,0	236,3	70,5	81,5	367,6	329,8	390,6	394,7	360,3	656,6	0,19	72,75	72,64	74,19	0,19	72,86	73,16	74,41
129,0	332,0	0,8	0,0	9,8	0,0	236,4	70,5	81,2	366,9	329,4	390,1	394,0	360,9	659,6	0,19	72,75	72,65	74,19	0,19	72,84	73,16	74,38
130,0	333,0	0,7	0,0	9,7	0,0	236,8	70,5	81,2	365,9	329,0	388,6	393,4	361,2	662,5	0,19	72,75	72,64	74,18	0,19	72,85	73,16	74,39
131,0	334,0	0,7	0,0	9,7	0,0	236,5	70,3	81,4	365,1	329,1	388,0	392,7	361,7	661,8	0,19	72,76	72,65	74,19	0,19	72,84	73,20	74,37
132,0	335,0	0,7	0,0	9,6	0,0	236,9	70,4	81,3	364,6	328,8	386,9	391,6	362,3	661,7	0,19	72,72	72,63	74,15	0,19	72,81	73,17	74,37
133,0	336,0	0,7	0,0	9,6	0,0	236,6	70,3	81,4	364,1	328,9	385,9	390,9	362,5	662,2	0,19	72,72	72,65	74,15	0,19	72,83	73,17	74,34
134,0	337,0	0,7	0,0	9,6	0,0	236,9	70,4	81,4	363,4	329,1	385,1	389,9	363,0	659,9	0,19	72,73	72,66	74,16	0,19	72,83	73,16	74,35
135,0	338,0	0,7	0,0	9,8	0,0	235,5	70,4	81,2	362,7	328,7	384,3	389,2	363,2	633,6	0,19	72,70	72,64	74,12	0,19	72,81	73,17	74,34
136,0	339,0	0,6	0,0	10,2	0,0	233,2	70,4	81,1	361,5	327,8	383,5	388,0	363,2	617,0	0,19	72,69	72,64	74,11	0,19	72,79	73,16	74,31
137,0	340,0	0,6	0,0	10,0	0,0	231,7	70,4	80,9	360,3	328,3	382,7	387,3	363,5	612,8	0,19	72,69	72,66	74,10	0,19	72,82	73,17	74,32
138,0	341,0	0,6	0,0	9,9	0,0	230,1	70,5	81,0	359,4	329,0	381,7	386,5	364,2	611,8	0,19	72,71	72,65	74,12	0,19	72,81	73,18	74,31
139,0	342,0	0,6	0,0	9,9	0,0	228,8	70,4	81,1	358,2	327,5	381,2	385,7	364,7	610,4	0,19	72,68	72,64	74,09	0,19	72,79	73,17	74,28
140,0	343,0	0,6	0,0	10,0	0,0	227,6	70,4	81,1	357,1	327,4	380,2	385,0	365,8	609,0	0,19	72,68	72,65	74,07	0,19	72,79	73,17	74,26
141,0	344,0	0,6	0,0	9,9	0,0	227,2	70,4	80,8	355,8	326,5	379,5	383,9	366,5	608,5	0,19	72,67	72,66	74,07	0,19	72,78	73,16	74,24
142,0	345,0	0,5	0,0	10,0	0,0	226,6	70,5	80,7	354,8	325,1	378,7	383,3	367,3	606,9	0,19	72,68	72,63	74,08	0,19	72,77	73,15	74,24
143,0	346,0	0,5	0,0	9,8	0,0	225,7	70,4	80,6	353,7	324,8	377,9	382,9	368,1	604,8	0,19	72,67	72,65	74,05	0,19	72,79	73,17	74,24
144,0	347,0	0,5	0,0	9,7	0,0	225,0	70,4	80,6	352,8	323,9	377,4	381,6	369,0	606,5	0,19	72,67	72,65	74,03	0,19	72,79	73,17	74,23
145,0	348,0	0,5	0,0	9,7	0,0	224,6	70,5	80,6	351,8	323,1	376,6	380,9	370,0	604,4	0,19	72,69	72,66	74,06	0,19	72,77	73,16	74,20
146,0	349,0	0,5	0,0	9,7	0,0	223,9	70,3	80,8	350,7	322,8	376,4	380,0	370,7	604,5	0,19	72,67	72,63	74,04	0,19	72,79	73,17	74,20
147,0	350,0	0,5	0,0	9,6	0,0	223,1	70,4	80,8	349,4	323,5	374,9	379,3	371,2	603,4	0,19	72,69	72,64	74,03	0,19	72,79	73,17	74,21
148,0	351,0	0,4	0,0	8,8	0,0	222,2	70,4	81,0	348,7	322,3	374,3	378,4	372,1	600,6	0,19	72,70	72,64	73,98	0,19	72,80	73,16	74,17
149,0	352,0	0,4	0,0	8,3	0,0	222,0	70,4	80,7	347,7	321,5	373,8	377,3	372,6	602,7	0,19	72,69	72,66	73,97	0,19	72,79	73,18	74,17
150,0	353,0	0,4	0,0	8,1	0,0	222,6	70,3	80,8	346,7	320,8	373,1	376,9	373,2	607,3	0,19	72,70	72,67	73,94	0,19	72,79	73,18	74,16
151,0	354,0	0,4	0,0	8,0	0,0	222,5	70,5	80,7	345,7	319,4	372,2	375,3	373,1	609,2	0,19	72,67	72,65	73,96	0,19	72,77	73,18	74,14
152,0	355,0	0,4	0,0	8,0	0,0	223,1	70,5	80,3	344,8	319,7	371,3	375,5	373,2	611,3	0,19	72,68	72,65	73,94	0,19	72,80	73,18	74,11
153,0	356,0	0,4	0,0	7,9	0,0	223,4	70,6	80,7	344,0	317,9	371,2	373,9	373,3	612,4	0,19	72,64	72,65	73,94	0,19	72,76	73,17	74,13
154,0	357,0	0,4	0,0	8,0	0,0	223,3	70,5	80,3	343,1	317,6	369,5	372,8	372,7	609,9	0,19	72,62	72,64	73,93	0,19	72,76	73,17	74,08
155,0	358,0	0,3	0,0	7,9	0,0	223,4	70,5	80,7	342,4	316,3	368,5	371,6	372,1	611,2	0,19	72,70	72,66	73,92	0,19	72,79	73,19	74,09
156,0	359,0	0,3	0,0	7,9	0,0	223,5	70,5	80,4	341,4	315,4	367,7	370,9	372,2	612,0	0,19	72,68	72,65	73,90	0,18	72,79	73,19	74,08
157,0	360,0	0,3	0,0	7,8	0,0	223,8	70,5	80,4	341,0	315,5	366,8	369,5	372,0	613,3	0,19	72,68	72,65	73,89	0,19	72,78	73,19	74,08
158,0	361,0	0,3	0,0	7,9	0,0	223,2	70,6	80,4	340,4	313,5	365,9	368,3	371,9	614,6	0,19	72,73	72,65	73,88	0,19	72,84	73,20	74,05
159,0	362,0	0,3	0,0	7,9	0,0	223,5	70,6	80,6	339,5	312,3	364,6	367,3	371,7	614,3	0,19	72,75	72,67	73,86	0,19	72,85	73,21	74,07
160,0	363,0	0,3	0,0	7,9	0,0	223,2	70,6	80,7	338,7	310,9	363,8	366,1	371,7	614,8	0,19	72,77	72,68	73,88	0,19	72,86	73,22	74,02
161,0	364,0	0,3	0,0	7,9	0,0	223,1	70,6	80,7	338,2	310,4	363,1	364,8	371,3	615,7	0,19	72,80	72,69	73,87	0,19	72,90	73,23	74,02
162,0	365,0	0,2	0,0	7,9	0,0	223,5	70,6	80,4	337,6	309,7	361,5	363,7	371,1	617,0	0,19	72,78	72,69	73,85	0,19	72,88	73,22	74,04
163,0	366,0	0,2	0,0	7,8	0,0	223,5	70,5	80,7	337,0	309,2	360,7	362,5	370,6	616,8	0,19	72,79	72,68	73,85	0,19	72,89	73,24	74,03
164,0	367,0	0,2	0,0	7,6	0,0	223,3	70,7	80,5	336,2	307,4	359,6	361,2	370,6	616,3	0,19	72,83	72,71	73,84	0,18	72,94	73,23	74,01
165,0	368,0	0,2	0,0	7,5	0,0	223,5	70,7	80,6	335,5	306,4	358,2	360,2	370,3	615,3	0,19	72,84	72,71	73,86	0,19	72,95	73,25	74,00
166,0	369,0	0,2	0,0	7,2	0,0	223,7	70,6	80,6	335,0	305,3	357,1	359,0	369,2	613,0	0,19	72,79	72,70	73,86	0,19	72,91	73,24	74,00
167,0	370,0	0,2	0,0	7,3	0,0	223,7	70,7	80,7	334,3	304,3	355,8	357,9	369,0	611,9	0,19	72,77	72,71	73,83	0,19	72,92	73,22	73,99
168,0	371,0	0,2	0,0	7,1	0,0	223,4	70,4	80,2	333,3	302,4	353,8	357,0	368,1	610,5	0,19	72,78	72,72	73,84	0,19	72,95	73,23	73,99
169,0	372,0	0,2	0,0	6,9	0,0	222,8	70,5	80,3	332,2	302,1	353,3	355,0	367,3	603,8	0,19	72,85	72,72	73,84	0,18	72,98	73,24	73,97
170,0	373,0	0,1	0,0	6,8	0,0	221,6	70,4	80,3	330,9	300,2	352,1	353,9	366,8	598,3	0,19	72,91	72,71	73,79	0,19	72,99	73,24	73,96
171,0	374,0	0,1	0,0	6,8	0,0	220,6	70,5	80,4	329,8	298,0	350,8	353,3	366,2	595,1	0,19	72,87	72,70	73,78	0,18	72,95	73,23	73,97
172,0	375,0	0,1	0,0	6,7	0,0	219,7	70,5	80,0	328,7	297,9	349,8	352,1	365,9	594,0	0,19	72,82	72,71	73,78	0,19	72,94	73,24	73,95
173,0	376,0	0,1	0,0	6,7	0,0	218,8	70,5	80,2	327,5	296,0	348,8	350,9	365,4	593,0	0,19	72,81	72,70	73,78	0,19	72,95	73,24	73,93
174,0	377,0	0,1	0,0	6,6	0,0	218,0	70,4	80,2	326,3	294,2	347,6	349,6	365,1	591,0	0,19	72,77	72,70	73,78	0,19	72,91	73,22	73,91
175,0	378,0	0,1	0,0	6,7	0,0	217,6	70,5	80,2	324,9	293,2	346,0	348,3	364,3	590,1	0,19	72,80	72,70	73,79	0,19	72,94	73,24	73,94
176,0	379,0	0,1	0,0	6,6	0,0	216,4	70,4	80,1	323,3	291,4	344,7	347,3	363,9	588,7	0,19	72,79	72,70	73,74	0,19	72,92	73,23	73,92
177,0	380,0	0,1	0,0	6,6	0,0	216,0	70,3	80,1	322,4	290,9	343,5	345,7	362,7	588,2	0,19	72,75	72,68	73,72	0,19	72,92	73,23	73,92
178,0	381,0	0,1	0,0	6,5	0,0	215,3	70,4	80,2	321,2	290,0	342,6	344,6	362,3	586,7	0,19	72,73	72,69	73,71	0,19	72,90	73,22	73,93
179,0	382,0	0,1	0,0	6,5	0,0	215,0	70,4	80,0	320,0	288,7	341,3	343,2	361,9	586,6	0,19	72,76	72,68	73,69	0,19	72,91	73,23	73,91
180,0	383,0	0,0	0,0	6,5	0,0	214,3	70,5	80,2	318,7	287,6	340,5	341,9	361,1	585,2	0,19	72,75	72,69	73,67	0,19	72,90	73,23	73,88

SFBA EPA EMISSION RESULTS

Test Duration: **180** min

PRESSURE FACTOR:	DGM 1	0,97327	
	DGM 2	0,97512	
	DGM 3	1,00325	
TEMPERATURE FACTORS	DGM 1	0,99147	
	DGM 2	0,99104	
	DGM 3	0,99577	
VOLUMES SAMPLED	DGM 1	34,174	SCft
	DGM 2	33,189	Scft
	DGM 3	45,601	SCft

TOTAL TUNNEL VOLUME : 30923

SAMPLE RATIOS

Sample Train 1:	904,856
Sample Train 2:	931,716

Paticulate concentration

Sample Train 1	**0,000061**	g/dscf
Sample Train 2	**0,000057**	g/dscf
Room	**0,000000**	g/dscf

TOTAL EMISSIONS

Sample Train 1	**1,90**	g
Sample Train 2	**1,77**	g

EMISSION RATES

Sample Train 1	**0,63**	g/hr
Sample Train 2	**0,59**	g/hr

1st hour emission rate **1,27** g/hr

	Train 1	Train 2
Cs	6,145E-05	5,72479E-05

RESULTS

Average emission rate: 0,6 g/hr

Burn Rate : 1,167 Dry kg/hr

BAROMETRIC PRESSURE

Average:	30,017234	in Hg
Start:	30,061529	in Hg
End:	29,972939	in Hg

DGM CONTROLLER VALUES

DGM 1	Final:	31010,907	Cuft
	Initial:	30975,528	Cuft
DGM 2	Final:	29242,016	Cuft
	Initial:	29207,231	Cuft
DGM #3	Final:	683,280	Cuft
	Initial:	637,440	Cuft

TEMPERATURES

DGM 1	532,541	°R
DGM 2	532,774	°R

CALIBRATION FACTORS

DGM 1	1,0010
DGM 2	0,9873
DGM #3	0,9958

TUNNEL FLOW RATE: 171,793 Dscfm

PARTICULATE CATCH

Total Sample Train 1:	2,10	mg
Total Sample Train 2:	1,90	mg
Total Sample Train 1 1st hour:	1,40	mg

DEVIATION: 3,54%

Manufacturer: HEARTHSTONE
Model: GM40

Run: 4
Project #: PI 20189
Test Duration: 180 min

Note: In the "Input data", "Calc. % O_2", "Fuel Properties", and "Mass Balance" columns, [e], [d], [g], [a]. [b], [c], [h], [u], [w], [j], and [k] refer to their respective variables in Clauses

	HHV	LHV
Eff	80,89%	87,42%
Comb Eff	99,22%	99,22%
HT Eff	81,52%	88,11%
Output	18 769	kJ/h
Burn Rate	1,17	kg/h
Grams CO	49	g
Input	23 205	kJ/h
MC wet	16,68	

Ultimate CO_2
$CO_{2\text{-ult}}$ 19,64
F_0
1,062

Overall Heating Efficiency: 80,89%
Combustion Efficiency: 99,22%
Heat Transfer Efficiency: 81,52%

Heat Output: 17 805 Btu/h
Heat Input: 22 012 Btu/h
Burn Duration: 3,00 h
Burn Rate: 2,58 lb/h
Stack Temp: 272,0 Deg. F

Averages	0,09	11,11	1,06	20,20	9,04	133,28	21,24	99,8%	82,0%	81,8%
INPUT DATA			Oxygen Calculation			Input Data		Combust	Heat	Net
Elapsed Time	Weight Remaining (kg)	% CO [e]	% CO_2 [d]	Excess Air EA	Total O_2	Calc. % O_2 [g]	Flue Gas (ºC)	Room Temp (ºC)	Eff %	Transfer %	Eff %
0,00	4,22	0,10	2,69	604,8%	20,76	18,02	126,4	20,5	98,9%	65,5%	64,8%
1,00	4,22	0,07	1,41	1228,5%	20,84	19,40	135,1	20,5	99,9%	41,4%	41,3%
2,00	4,17	0,01	1,76	1009,0%	20,82	19,06	143,4	20,5	102,8%	47,5%	48,8%
3,00	4,13	0,01	4,98	294,4%	20,61	15,63	153,6	20,5	100,8%	72,6%	73,2%
4,00	4,08	0,00	5,15	281,3%	20,60	15,45	162,2	20,7	100,8%	72,0%	72,6%
5,00	3,99	0,00	7,08	177,1%	20,47	13,39	174,1	20,6	100,5%	75,3%	75,7%
6,00	3,95	0,00	12,46	57,6%	20,12	7,65	155,4	20,6	100,2%	82,0%	82,2%
7,00	3,95	0,02	7,79	151,6%	20,42	12,62	142,2	20,6	100,3%	79,3%	79,6%
8,00	3,90	0,00	5,18	279,1%	20,60	15,42	133,9	20,6	100,8%	75,7%	76,3%
9,00	3,86	0,00	5,35	267,2%	20,59	15,24	129,3	20,6	100,8%	76,7%	77,3%
10,00	3,86	0,00	5,92	231,5%	20,55	14,62	127,8	20,6	100,7%	78,0%	78,6%
11,00	3,81	0,00	7,15	174,8%	20,47	13,32	128,6	20,6	100,5%	79,8%	80,2%
12,00	3,76	0,00	8,00	145,3%	20,41	12,41	131,0	20,7	100,4%	80,5%	80,9%
13,00	3,72	0,00	8,15	140,9%	20,40	12,25	132,6	20,6	100,4%	80,5%	80,9%
14,00	3,67	0,00	7,23	171,6%	20,46	13,23	133,8	20,6	100,5%	79,4%	79,8%
15,00	3,63	0,00	7,97	146,3%	20,41	12,44	136,0	20,6	100,4%	80,1%	80,4%
16,00	3,58	0,00	9,62	104,2%	20,30	10,69	140,4	20,6	100,3%	81,2%	81,5%
17,00	3,54	0,26	15,76	22,7%	19,88	4,00	146,9	20,6	98,7%	83,7%	82,6%
18,00	3,45	0,32	16,66	15,7%	19,82	3,00	151,2	20,6	98,5%	83,8%	82,5%
19,00	3,40	0,25	16,70	15,9%	19,82	3,00	153,5	20,6	98,8%	83,7%	82,7%
20,00	3,31	0,15	13,79	40,9%	20,02	6,15	152,5	20,7	99,2%	82,8%	82,1%
21,00	3,27	0,04	12,19	60,6%	20,13	7,92	151,6	20,7	99,9%	82,1%	82,0%
22,00	3,22	0,02	11,45	71,2%	20,18	8,72	151,4	20,6	100,1%	81,7%	81,8%
23,00	3,17	0,01	11,79	66,5%	20,16	8,37	151,2	20,7	100,1%	81,9%	82,0%
24,00	3,13	0,01	11,93	64,5%	20,15	8,21	150,8	20,7	100,2%	82,0%	82,2%
25,00	3,08	0,00	12,56	56,3%	20,11	7,55	150,1	20,7	100,1%	82,4%	82,5%
26,00	3,04	0,00	13,37	46,9%	20,06	6,69	150,1	20,7	100,1%	82,8%	82,9%
27,00	2,99	0,00	14,50	35,4%	19,98	5,48	150,9	20,7	100,1%	83,2%	83,3%
28,00	2,95	0,00	15,38	27,7%	19,92	4,55	152,5	20,7	100,1%	83,4%	83,5%
29,00	2,86	0,01	15,81	24,2%	19,90	4,09	154,3	20,8	100,0%	83,5%	83,5%
30,00	2,81	0,15	16,53	17,7%	19,84	3,23	157,8	20,8	99,3%	83,5%	82,9%
31,00	2,77	0,60	17,01	11,6%	19,78	2,47	161,2	20,8	97,2%	83,3%	81,0%
32,00	2,68	0,67	17,46	8,4%	19,74	1,95	164,7	20,9	96,9%	83,3%	80,7%
33,00	2,63	0,27	17,36	11,4%	19,78	2,29	166,7	21,0	98,7%	83,3%	82,2%
34,00	2,59	0,20	17,39	11,7%	19,78	2,29	168,2	21,0	99,1%	83,2%	82,5%
35,00	2,49	0,51	17,23	10,7%	19,77	2,28	169,9	21,0	97,6%	83,0%	81,0%
36,00	2,45	0,82	17,21	9,0%	19,75	2,13	171,0	21,0	96,2%	82,9%	79,7%
37,00	2,40	0,92	17,21	8,4%	19,74	2,08	172,3	21,0	95,7%	82,8%	79,3%
38,00	2,31	0,99	17,32	7,3%	19,73	1,91	173,7	21,1	95,5%	82,7%	79,0%
39,00	2,27	0,31	17,37	11,1%	19,77	2,24	174,7	21,1	98,6%	82,9%	81,7%
40,00	2,22	0,32	17,38	11,0%	19,77	2,23	175,6	21,2	98,5%	82,9%	81,6%
41,00	2,13	0,36	17,31	11,2%	19,77	2,28	176,3	21,2	98,3%	82,8%	81,4%
42,00	2,09	0,41	17,29	11,0%	19,77	2,28	176,3	21,1	98,1%	82,8%	81,2%
43,00	2,00	0,33	17,50	10,1%	19,76	2,09	176,0	21,3	98,5%	82,9%	81,6%
44,00	1,95	0,35	17,39	10,7%	19,77	2,20	175,9	21,3	98,3%	82,9%	81,5%
45,00	1,91	0,42	17,31	10,8%	19,77	2,26	176,4	21,1	98,1%	82,8%	81,2%
46,00	1,86	0,48	17,18	11,3%	19,77	2,36	176,9	21,4	97,8%	82,7%	80,8%
47,00	1,77	0,54	17,14	11,1%	19,77	2,36	176,2	21,4	97,5%	82,7%	80,6%
48,00	1,72	0,48	17,07	11,9%	19,78	2,47	175,0	21,4	97,7%	82,8%	80,9%
49,00	1,68	0,45	16,99	12,6%	19,79	2,57	174,3	21,5	97,8%	82,8%	81,0%
50,00	1,63	0,32	17,01	13,4%	19,80	2,63	174,0	21,4	98,5%	82,8%	81,6%
51,00	1,59	0,21	17,14	13,2%	19,79	2,55	173,7	21,5	99,0%	82,9%	82,1%
52,00	1,54	0,38	16,86	13,9%	19,80	2,75	173,8	21,5	98,2%	82,8%	81,3%
53,00	1,50	0,66	16,89	11,9%	19,78	2,56	174,1	21,5	96,9%	82,7%	80,1%
54,00	1,45	0,82	16,94	10,6%	19,77	2,42	174,8	21,6	96,2%	82,6%	79,5%
55,00	1,41	0,88	16,96	10,1%	19,76	2,36	174,9	21,3	95,9%	82,6%	79,2%
56,00	1,36	0,64	16,78	12,8%	19,79	2,70	174,6	21,5	97,0%	82,6%	80,1%
57,00	1,32	0,25	16,59	16,6%	19,83	3,11	174,2	21,4	98,8%	82,7%	81,7%
58,00	1,27	0,15	16,48	18,1%	19,84	3,29	173,4	21,2	99,3%	82,7%	82,1%
59,00	1,22	0,10	16,15	20,9%	19,87	3,67	172,7	21,4	99,5%	82,7%	82,3%
60,00	1,18	0,07	16,10	21,5%	19,87	3,74	172,2	21,4	99,7%	82,7%	82,4%
61,00	1,18	0,07	16,05	21,8%	19,88	3,79	171,8	21,5	99,7%	82,7%	82,4%
62,00	1,13	0,05	16,27	20,4%	19,86	3,57	170,8	21,4	99,8%	82,8%	82,6%
63,00	1,09	0,05	16,13	21,4%	19,87	3,72	169,9	21,5	99,8%	82,8%	82,7%
64,00	1,04	0,08	16,12	21,3%	19,87	3,71	168,6	21,6	99,7%	82,9%	82,6%
65,00	1,04	0,12	15,82	23,3%	19,89	4,01	167,1	21,5	99,5%	82,8%	82,4%
66,00	1,00	0,07	15,69	24,6%	19,90	4,17	165,5	21,5	99,7%	82,9%	82,6%
67,00	0,95	0,03	15,46	26,8%	19,92	4,45	164,1	21,5	99,9%	82,9%	82,8%
68,00	0,95	0,04	15,49	26,5%	19,91	4,40	162,5	21,6	99,9%	83,0%	82,9%
69,00	0,91	0,02	15,12	29,8%	19,94	4,81	160,0	21,5	100,0%	83,0%	83,0%
70,00	0,91	0,01	14,57	34,8%	19,98	5,41	157,3	21,6	100,1%	82,9%	83,0%
71,00	0,86	0,00	13,63	44,1%	20,04	6,41	153,9	21,5	100,1%	82,7%	82,8%
72,00	0,86	0,00	12,67	54,9%	20,10	7,43	150,4	21,5	100,2%	82,5%	82,6%
73,00	0,86	0,00	11,60	69,2%	20,17	8,57	147,2	21,6	100,2%	82,1%	82,3%
74,00	0,86	0,00	11,01	78,4%	20,21	9,20	145,0	21,6	100,2%	81,9%	82,1%
75,00	0,82	0,00	10,81	81,6%	20,23	9,41	142,5	21,5	100,2%	82,0%	82,1%
76,00	0,82	0,00	10,70	83,6%	20,23	9,54	140,4	21,3	100,2%	82,0%	82,2%
77,00	0,82	0,00	10,65	84,5%	20,24	9,59	138,6	21,5	100,2%	82,1%	82,3%
78,00	0,82	0,00	10,58	85,6%	20,24	9,66	137,2	21,4	100,2%	82,2%	82,4%
79,00	0,77	0,01	10,48	87,4%	20,25	9,77	136,0	21,4	100,2%	82,2%	82,4%
80,00	0,77	0,01	10,38	89,1%	20,25	9,87	134,8	21,5	100,2%	82,2%	82,4%
81,00	0,77	0,01	10,33	90,1%	20,26	9,93	133,9	21,4	100,2%	82,2%	82,4%
82,00	0,77	0,01	10,33	90,0%	20,26	9,92	132,7	21,4	100,2%	82,3%	82,5%
83,00	0,73	0,01	10,29	90,7%	20,26	9,96	131,8	21,5	100,2%	82,4%	82,6%
84,00	0,73	0,01	10,33	90,0%	20,26	9,92	131,1	21,4	100,2%	82,4%	82,6%
85,00	0,73	0,01	10,35	89,7%	20,26	9,90	130,2	21,3	100,2%	82,5%	82,7%
86,00	0,73	0,01	10,37	89,4%	20,26	9,89	129,4	21,3	100,2%	82,6%	82,8%
87,00	0,73	0,01	10,35	89,7%	20,26	9,91	128,5	21,4	100,2%	82,6%	82,8%
88,00	0,68	0,01	10,40	88,8%	20,25	9,85	127,8	21,4	100,2%	82,7%	82,9%
89,00	0,68	0,01	10,40	88,8%	20,25	9,85	126,9	21,4	100,2%	82,8%	82,9%
90,00	0,68	0,01	10,38	89,1%	20,25	9,87	125,9	21,4	100,2%	82,8%	83,0%
91,00	0,68	0,01	10,35	89,7%	20,26	9,91	125,3	21,4	100,2%	82,8%	83,0%
92,00	0,68	0,01	10,45	87,9%	20,25	9,80	124,6	21,4	100,2%	82,9%	83,1%

93,00	0,64	0,01	10,45	87,9%	20,25	9,80	124,2	21,4	100,2%	83,0%	83,2%
94,00	0,64	0,01	10,46	87,6%	20,25	9,78	123,6	21,5	100,2%	83,0%	83,2%
95,00	0,64	0,01	10,43	88,2%	20,25	9,82	123,1	21,5	100,2%	83,0%	83,2%
96,00	0,64	0,01	10,46	87,6%	20,25	9,78	122,5	21,4	100,2%	83,1%	83,3%
97,00	0,64	0,01	10,45	87,9%	20,25	9,80	122,2	21,4	100,2%	83,1%	83,3%
98,00	0,59	0,01	10,48	87,3%	20,25	9,76	121,4	21,4	100,2%	83,2%	83,4%
99,00	0,59	0,01	10,45	87,9%	20,25	9,80	120,8	21,4	100,2%	83,2%	83,4%
100,00	0,59	0,01	10,37	89,4%	20,26	9,89	120,5	21,4	100,2%	83,2%	83,4%
101,00	0,59	0,01	10,32	90,3%	20,26	9,94	119,8	21,4	100,2%	83,2%	83,4%
102,00	0,59	0,01	10,38	89,1%	20,25	9,87	119,3	21,5	100,2%	83,3%	83,5%
103,00	0,54	0,01	10,35	89,7%	20,26	9,90	119,0	21,4	100,2%	83,3%	83,5%
104,00	0,54	0,01	10,33	90,0%	20,26	9,92	118,4	21,4	100,2%	83,3%	83,5%
105,00	0,54	0,01	10,28	90,9%	20,26	9,97	118,2	21,4	100,2%	83,3%	83,5%
106,00	0,54	0,01	10,33	90,0%	20,26	9,92	118,0	21,4	100,2%	83,3%	83,5%
107,00	0,54	0,01	10,30	90,6%	20,26	9,96	117,5	21,4	100,2%	83,3%	83,5%
108,00	0,54	0,01	10,31	90,3%	20,26	9,94	117,4	21,3	100,2%	83,4%	83,5%
109,00	0,50	0,01	10,20	92,5%	20,27	10,06	117,1	21,2	100,2%	83,3%	83,5%
110,00	0,50	0,01	10,28	90,9%	20,26	9,97	116,4	21,4	100,2%	83,4%	83,6%
111,00	0,50	0,01	10,28	90,9%	20,26	9,97	116,1	21,3	100,2%	83,4%	83,6%
112,00	0,50	0,01	10,25	91,5%	20,26	10,01	116,0	21,3	100,2%	83,4%	83,6%
113,00	0,50	0,01	10,13	93,7%	20,27	10,13	115,7	21,3	100,2%	83,4%	83,6%
114,00	0,45	0,01	10,20	92,5%	20,27	10,06	115,4	21,4	100,2%	83,4%	83,6%
115,00	0,45	0,01	10,18	92,8%	20,27	10,08	115,5	21,4	100,2%	83,4%	83,6%
116,00	0,45	0,01	10,30	90,6%	20,26	9,96	115,1	21,4	100,2%	83,5%	83,7%
117,00	0,45	0,01	10,20	92,5%	20,27	10,06	114,7	21,4	100,2%	83,5%	83,7%
118,00	0,45	0,01	10,22	92,1%	20,27	10,05	114,7	21,4	100,2%	83,5%	83,7%
119,00	0,41	0,01	10,21	92,2%	20,27	10,05	114,3	21,4	100,2%	83,5%	83,7%
120,00	0,41	0,01	10,16	93,1%	20,27	10,10	114,1	21,4	100,2%	83,5%	83,7%
121,00	0,41	0,01	10,18	92,8%	20,27	10,08	113,9	21,3	100,2%	83,5%	83,7%
122,00	0,41	0,01	10,08	94,7%	20,27	10,19	113,8	21,4	100,2%	83,5%	83,7%
123,00	0,41	0,01	10,07	95,0%	20,27	10,20	113,6	21,4	100,2%	83,5%	83,7%
124,00	0,41	0,01	10,07	95,0%	20,27	10,20	113,6	21,4	100,2%	83,5%	83,7%
125,00	0,36	0,01	10,00	96,2%	20,28	10,27	113,5	21,4	100,2%	83,5%	83,7%
126,00	0,36	0,01	9,90	98,2%	20,29	10,38	113,5	21,4	100,2%	83,4%	83,6%
127,00	0,36	0,01	9,82	99,9%	20,29	10,47	113,7	21,3	100,2%	83,3%	83,5%
128,00	0,36	0,01	9,84	99,5%	20,29	10,45	113,5	21,4	100,2%	83,4%	83,6%
129,00	0,36	0,01	9,75	101,2%	20,30	10,54	113,5	21,4	100,2%	83,3%	83,5%
130,00	0,32	0,01	9,74	101,6%	20,30	10,56	113,8	21,4	100,2%	83,3%	83,5%
131,00	0,32	0,01	9,67	103,0%	20,30	10,63	113,6	21,3	100,3%	83,3%	83,5%
132,00	0,32	0,01	9,61	104,3%	20,31	10,70	113,8	21,4	100,3%	83,2%	83,4%
133,00	0,32	0,01	9,62	104,0%	20,30	10,68	113,6	21,3	100,3%	83,2%	83,4%
134,00	0,32	0,01	9,60	104,3%	20,31	10,70	113,8	21,3	100,3%	83,2%	83,4%
135,00	0,32	0,01	9,83	99,8%	20,29	10,46	113,1	21,3	100,3%	83,4%	83,6%
136,00	0,27	0,01	10,20	92,5%	20,27	10,06	111,8	21,3	100,2%	83,7%	83,9%
137,00	0,27	0,01	10,02	96,0%	20,28	10,26	111,0	21,4	100,3%	83,6%	83,9%
138,00	0,27	0,01	9,94	97,6%	20,28	10,34	110,0	21,4	100,3%	83,7%	83,9%
139,00	0,27	0,01	9,93	97,6%	20,28	10,35	109,3	21,3	100,3%	83,7%	83,9%
140,00	0,27	0,01	9,95	97,2%	20,28	10,33	108,7	21,3	100,3%	83,8%	84,0%
141,00	0,27	0,01	9,94	97,6%	20,28	10,34	108,5	21,4	100,3%	83,8%	84,0%
142,00	0,23	0,01	9,97	97,0%	20,28	10,31	108,1	21,4	100,3%	83,8%	84,0%
143,00	0,23	0,01	9,79	100,6%	20,29	10,50	107,6	21,3	100,3%	83,8%	84,0%
144,00	0,23	0,01	9,69	102,6%	20,30	10,61	107,2	21,3	100,3%	83,7%	84,0%
145,00	0,23	0,01	9,72	102,0%	20,30	10,58	107,0	21,4	100,3%	83,8%	84,0%
146,00	0,23	0,01	9,65	103,3%	20,30	10,64	106,6	21,3	100,3%	83,8%	84,0%
147,00	0,23	0,01	9,62	104,0%	20,30	10,68	106,2	21,3	100,3%	83,8%	84,0%
148,00	0,18	0,01	8,81	122,7%	20,36	11,54	105,7	21,4	100,3%	83,3%	83,6%
149,00	0,18	0,01	8,32	136,0%	20,39	12,07	105,6	21,4	100,4%	83,0%	83,3%
150,00	0,18	0,01	8,14	141,2%	20,40	12,26	105,9	21,3	100,4%	82,8%	83,1%
151,00	0,18	0,01	8,04	144,2%	20,41	12,37	105,8	21,4	100,4%	82,8%	83,1%
152,00	0,18	0,01	7,99	145,6%	20,41	12,42	106,2	21,4	100,4%	82,7%	83,0%
153,00	0,18	0,01	7,94	147,2%	20,42	12,47	106,3	21,4	100,4%	82,7%	83,0%
154,00	0,18	0,01	7,95	146,8%	20,41	12,46	106,3	21,4	100,4%	82,7%	83,0%
155,00	0,14	0,01	7,87	149,3%	20,42	12,54	106,3	21,4	100,4%	82,6%	82,9%
156,00	0,14	0,01	7,89	148,8%	20,42	12,53	106,4	21,4	100,4%	82,6%	82,9%
157,00	0,14	0,01	7,82	150,8%	20,42	12,60	106,5	21,4	100,4%	82,5%	82,9%
158,00	0,14	0,01	7,87	149,3%	20,42	12,54	106,2	21,5	100,4%	82,6%	82,9%
159,00	0,14	0,01	7,91	148,2%	20,42	12,51	106,4	21,5	100,4%	82,6%	82,9%
160,00	0,14	0,01	7,89	148,7%	20,42	12,52	106,2	21,5	100,4%	82,6%	82,9%
161,00	0,14	0,01	7,87	149,2%	20,42	12,54	106,2	21,5	100,4%	82,6%	82,9%
162,00	0,09	0,01	7,89	148,7%	20,42	12,53	106,4	21,4	100,4%	82,6%	82,9%
163,00	0,09	0,01	7,77	152,4%	20,43	12,65	106,4	21,4	100,4%	82,5%	82,8%
164,00	0,09	0,01	7,64	156,7%	20,43	12,79	106,3	21,5	100,4%	82,4%	82,8%
165,00	0,09	0,01	7,51	161,3%	20,44	12,93	106,4	21,5	100,4%	82,3%	82,6%
166,00	0,09	0,01	7,24	170,8%	20,46	13,21	106,5	21,5	100,4%	82,0%	82,4%
167,00	0,09	0,01	7,28	169,5%	20,46	13,18	106,5	21,5	100,4%	82,1%	82,4%
168,00	0,09	0,01	7,11	175,8%	20,47	13,35	106,3	21,4	100,5%	81,9%	82,3%
169,00	0,09	0,01	6,88	185,0%	20,48	13,60	106,0	21,4	100,5%	81,7%	82,1%
170,00	0,05	0,01	6,77	189,9%	20,49	13,72	105,3	21,3	100,5%	81,6%	82,1%
171,00	0,05	0,01	6,78	189,2%	20,49	13,70	104,8	21,4	100,5%	81,7%	82,1%
172,00	0,05	0,01	6,73	191,4%	20,49	13,76	104,3	21,4	100,5%	81,7%	82,1%
173,00	0,05	0,01	6,70	192,8%	20,50	13,79	103,8	21,4	100,5%	81,7%	82,2%
174,00	0,05	0,01	6,62	196,5%	20,50	13,88	103,3	21,4	100,5%	81,7%	82,1%
175,00	0,05	0,01	6,73	191,4%	20,49	13,76	103,1	21,4	100,5%	81,8%	82,3%
176,00	0,05	0,01	6,63	195,7%	20,50	13,86	102,5	21,3	100,5%	81,8%	82,2%
177,00	0,05	0,01	6,55	199,4%	20,51	13,95	102,2	21,3	100,5%	81,7%	82,2%
178,00	0,05	0,01	6,54	200,2%	20,51	13,97	101,8	21,3	100,5%	81,7%	82,2%
179,00	0,05	0,01	6,49	202,4%	20,51	14,02	101,7	21,3	100,5%	81,7%	82,1%
180,00	0,00	0,01	6,45	204,1%	20,51	14,06	101,3	21,4	100,5%	81,7%	82,2%

POLYTESTS
TESTING THROUGH YOUR REALITY

No Fan

Date: 2019-03-25 Manufacturer: Hearthstone Model: Gm 40

Project #: pI 20189 Run: 5 Tech: MM Reviewer: AP

- Kindling 25 LBS start Fire
- ~~X~~ Fan off
- by pass open
- At 1,8 LBS close Door
- At 0,5 LBS insert preload
- At 12,3 LBS close Door
- At 10 LBS close bypass
- At 19 LBS insert second preload
- At 36 LBS close air inlet (Ch.11 6.1 1/16)
- At 19 LBS - open bypass
  - open Door
  - crush coal bed
  - close Door
  - close bypas
- After 2 min
- open Door

TEST LOAD CONFIGURATION

- open by pass
- open air inlet
- insert load
- close Door
- close bypass

After 5 min close air inlet (ch.11 6.1 1/16)

POLYTESTS
TESTING THROUGH YOUR REALITY

PRE / POST CHECKS

Date: 2019. 03. 25 Manufacturer: Hearthstone Model: GM 40

Project #: PE 2089 Run: 5 Tech: MM Reviewer: SO

Moisture Meter Calibration Check:	Equipment #	Time	12%	22%
	EM-19	7:00	ok	ok

	Pre-Test	Post-Test
Facility Conditions:		
Air Velocity from less than 2 feet	0 (max50 Fpm)	(max50 Fpm)
Smoke Capture Check (tunnel velocity)	ok	NA
Picture (4 sides)	ok	ok
Wood Heater Conditions:		
Date Wood Heater Stack Cleaned	2019.03.18	
Date Dilution Tunnel Cleaned	2019.03.18	
Induced Draft Check (max 0.005 H2O)	ok	
Traverse before ignition	ok	
Flow Rate 140 cfm ±10%		ok
Temperature System:		
Ambient (65°-90°F)		ok °F
Wood Heater Surface (±125°F)		ok °F
Proportional Checks:		
Thermocouple check	ok	
Pitot Clean	ok	
Pitot verification	ok	

Sampling Train ID Numbers:	Train 1st hour	Train 1	Train 2
Probe	03	09	19
Filter Front	65	67	69
Filter Back	66	68	70
Filter Thermocouple	11	11	12
Filter (<90°F)	ok	ok	ok

POLYTESTS
TESTING THROUGH YOUR REALITY

SAMPLING EQUIPMENT CHECK OUT

Date: 2019-03-25 Manufacturer: Acathstone Model: GM 40

Project #: pt 2189 Run: 5 Tech: MM Reviewer: NP

Leakage Checks Tunnel Samplers

	System 1st hour		System 1		System 2	
Unplugged Flow Rate = .25cfm	Pre-Test ASTM (-15) CSA B415 (-5)	Post-Test (max test)	Pre-Test ASTM (-15) CSA B415 (-5)	Post-Test (Max test)	Pre-Test ASTM (-15) CSA B415 (-5)	Post-Test (Max test)
Vacuum (inches Hg.)	-15	-15	-15	-15	-15	-15
Final 1minute DGM (Liter)	878132.35	879232.52	878132.61	879233.89	828043.70	829131.26
Initial 1minute DGM (Liter)	878132.32	879232.52	878132.60	879233.85	828043.65	829131.22
Change © (Liter)	0.03	0	0.01	0.04	0.05	0.04
Allowable leakage .04 x Sample rate or 0.28Lpm CSA B415 (0.56)						
Check OK	OK	OK	OK	OK	OK	OK

Leakage Checks Flue Gas Sampler

Plugged Probe	Pre Test	Post Test
Vacuum (inches Hg.)	-5	-5
Rotometer Reading (mml/min.)	0	0
Flow Rate (lpm)	1.5	1.5
Allowable (.02 x Sample Rate)	30	30
Check OK	OK	OK

Leakage Checks Pitot

Plugged Probe	Pre Test 3 H2o static	Pre Test 0.4-0.5 H2o velocity	Post Test 3 H2o Static	Post Test 0.4-0.5 H2o velocity
Vacuum (inches Hg.)	3	.4	3	.5
Check OK (no change after 15 sec.)	OK	OK	OK	OK

POLYTESTS
TESTING THROUGH YOUR REALITY

PRE-TEST SCALE AUDIT

Date: 2019-03-25 Manufacturer: Healthstone Model: GM 40

Project #: PT 20189 Run: 5 Tech: MM Reviewer: DP

Scale Type	Audit		Measured Weight
	Equipment #	Weight	
Platform	EM-096	44 lbs, Class F	44 lbs
Wood	EM 090	44 lbs, Class F	44 lbs
Analytical	EM-128	100 mg, Class S	100 mg
Analytical	EM-129	200 g, Class S	200 g

LIMITS OF WEIGHT RANGES

ANALYTICAL SCALE: ..... 50%-150% of dry filter weight, ± 0.1 mg
PLATFORM SCALE.....20%-80% of ideal test load weight, ± 0.1 lbs or 1%
WOOD SCALE .....20%-80% of ideal test load weight, ± 0.01 lbs or 1%

Date: 2019-03-25 Manufacturer: Hearthstone Model: GM 40

Project #: pT 20189 Run: 5 Tech: MR Reviewer: DP

FOR TUNNELS < 12 in

Barometric pressure (P_{bar}) 102.1 (KPa.) Static pressure (P_q) .035 (inches w.c.)
Inside diameter: Port A _____ Port B ____.
Tunnel cross sectional area: .1963Ft^2
Pitot tube type: Standard

Traverse Point	Position (inches)			Velocity Head Δ_p (inches H_2O)	Tunnel Temperature (°F)
	6 po	7 po	8 po		
A- Centroid	3.00	3.50	4	0.060	66.75
B - Centroid	3.00	3.50	4	0.061	66.56
A-1	0.40	0.50	0.50	0.047	66.83
A-2	1.50	1.75	2	0.050	66.79
A-3	4.50	5.25	6	0.051	66.76
A-4	5.60	6.5	7.5	0.048	66.65
B-1	0.40	0.50	0.50	0.048	66.60
B-2	1.50	1.75	2	0.053	66.68
B-3	4.50	5.25	6	0.059	66.73
B-4	5.60	6.5	7.5	0.049	66.73
				AVERAGE	

$$v_s = K_p C_p (\sqrt{\Delta p})_{avg} \sqrt{\frac{(T_s)_{avg}}{P_s M_s}}$$

Where,
C_p = pitot tube coefficient, dimension less = 0.99 for standard pitot.
Δ_p = manometer reading (inches H_2O)
T_s = average absolute dilution tunnel temperature (°F + 460)
P_s = absolute dilution tunnel gas pressure or $P_{bar} + P_{qg}$
P_q = static pressure $\frac{\text{in. } H_2O}{\{ 13.6 \}}$
M_s = 28.56, wet molecular weight of stack gas (alternatively, it may be measured)
K_p = 85.49 pitot tube constant, (conversion factor for English units)

$\Delta_p$avg. = average of the square roots of the velocity heads (Δ_p) measured at each traverse point.

POLYTESTS
TESTING THROUGH YOUR REALITY

CONTINUOUS ANALYZERS

Date: 2019-03-25 Manufacturer: Hearthstone Model: GM 90

Project #: PT 2189 Run: 5 Tech: MM Reviewer: DP

Pre-Test (Adjust and Record)

	ZERO		SPAN		CAL. (Record Only)	
CO	0	0	2987	3,000	1,009	~~1,798~~ MM 1,000
Tolerance CO		+/- 0.02		+/- 0.15		+/- 0.05
CO_2	0	0	18,00	18,00	9,80	10,00
Tolerance CO2		+/- 0.02		+/- 0.5		+/- 0.5
O_2 informative CSA B415 calculated value	na	na	na	na	na	na
	Actual	Should Be	Actual	Should Be	Actual	Should Be

Post Test (Record Only)

	Zero	Span	Cal.	Zero Drift	Limit	Span Drift	Limit	Cal. Drift	Limit	OK?	Not OK*
CO	0	2990	1,002	0	0.02	0,003	0.15	0,007	0.05	✓	
CO_2	0	17,93	9,86	0	0.02	0,07	0.5	0,06	0.5	✓	

POLYTESTS
TESTING THROUGH YOUR REALITY

TEST DATA LOG

Date: 2019-07-25 Manufacturer: Hearthstone Model: GM 40

Project #: PI 20189 Run: 5 Tech: [illegible] Reviewer: [illegible]

RAW DRY GAS METER READINGS

	System 1	System 2	Blanck
Final (Liter)	879231.54	829130.22	733.54
Initial (Liter)	878133.27	828044.50	683.28

AMBIENT CONDITIONS

	Before	After
Barometer (kPa):	102.1	102.1
Dry Bulb (F):	68.9	71.68
Humidity (%):	24.9	24.0

Flow Meter

	Start	End
Flow meter reading	NA	NA

Flow Meter Verification

	Before	After
Flow meter Check (liters)	N.A	NA
Scale Weight (Kg)	NA	NA

POLYTESTS
TESTING THROUGH YOUR REALITY

FUEL DATA

Date: 2019-03-25 Manufacturer: Hearthstone Model: GM 40

Project #: pT 20189 Run: 5 Tech: MM Reviewer: DP

FUEL DESCRIPTION:

Type of wood:

PRE-TEST LOAD

Piece Size	Weight	Meter Moisture Content (% dry)*				
1 1/2 x3 1/2 x 8 in.	0.756 lbs.	208	209	204	203	207
1 1/2 x3 1/2 x 8 in.	0.760 lbs.	198	196	199	201	199
1 1/2 x3 1/2 x 8 in.	0.768 lbs.	208	208	204	209	207
1 1/2 x3 1/2 x 8 in.	0.886 lbs.	194	193	192	198	193
1 1/2 x3 1/2 x 8 in.	0.876 lbs.	206	209	208	203	206
1 1/2 x3 1/2 x 8 in.	0.870 lbs.	204	208	209	207	205
1 1/2 x3 1/2 x 8 in.	0.912 lbs.	199	193	198	197	194
1 1/2 x3 1/2 x 8 in.	0.870 lbs.	201	208	209	209	207
1 1/2 x3 1/2 x 8 in.	0.878 lbs.	196	194	198	193	197
1 1/2 x3 1/2 x 8 in.	0.884 lbs.	201	206	204	208	209
1 1/2 x3 1/2 x 8 in.	0.926 lbs.	193	198	196	193	193
1 1/2 x3 1/2 x 8 in.	0.896 lbs.	204	209	208	203	204
1 1/2 x3 1/2 x 8 in.	0.916 lbs.	209	210	211	210	212
1 1/2 x3 1/2 x 8 in.	0.898 lbs.	199	197	197	197	198
x x in.	lbs.					
x x in.	lbs.					
x x in.	lbs.					
x x in.	lbs.					
x x in.	lbs.					
x x in.	lbs.					
x x in.	lbs.					
x x in.	lbs.					
x x in.	lbs.					

TEST LOAD WEIGHT: ~~12.09~~ lbs

12.10 mm

POLYTESTS
TESTING THROUGH YOUR REALITY

FUEL DATA

Date: 2019-03-25 Manufacturer: Hearthstone Model: GM 40

Project #: PT 2.189 Run: 5 Tech: M.M Reviewer: [illegible]

FUEL DESCRIPTION:

Type of wood:

PRE-TEST LOAD

Piece Size	Weight		Meter Moisture Content (% dry)*			
1 1/2 x 3 1/2 x 8 in.	0 742 lbs.	206	209	210	208	207
1 1/2 x 3 1/2 x 8 in.	0 844 lbs.	206	199	196	198	197
1 1/2 x 3 1/2 x 8 in.	0 766 lbs.	208	209	206	208	204
1 1/2 x 3 1/2 x 8 in.	0 820 lbs.	209	206	209	204	203
1 1/2 x 3 1/2 x 8 in.	0 764 lbs.	199	193	193	194	195
1 1/2 x 3 1/2 x 8 in.	0 800 lbs.	206	203	208	209	207
1 1/2 x 3 1/2 x 8 in.	0 748 lbs.	199	193	193	196	196
1 1/2 x 3 1/2 x 8 in.	0 784 lbs.	210	213	209	208	210
1 1/2 x 3 1/2 x 8 in.	0 798 lbs.	213	210	199	208	208
1 1/2 x 3 1/2 x 8 in.	0 814 lbs.	209	206	203	207	208
1 1/2 x 3 1/2 x 8 in.	0 808 lbs.	199	193	197	193	195
1 1/2 x 3 1/2 x 8 in.	0 794 lbs.	200	203	206	209	203
1 1/2 x 3 1/2 x 8 in.	0 800 lbs.	199	193	194	195	197
1 1/2 x 3 1/2 x 8 in.	0 792 lbs.	200	203	201	200	202
x x in.	lbs.					
x x in.	lbs.					
x x in.	lbs.					
x x in.	lbs.					
x x in.	lbs.					
x x in.	lbs.					
x x in.	lbs.					
x x in.	lbs.					
x x in.	lbs.					

TEST LOAD WEIGHT: 11 06 lbs

POLYTESTS
TESTING THROUGH YOUR REALITY

FUEL DATA

Date: 2019-03-25 Manufacturer: Hearthstone Model: GM 40

Project #: PT 20189 Run: 5 Tech: MM Reviewer:

FUEL DESCRIPTION:

Type of wood :

TEST LOAD

Piece Size				Weight		Meter Moisture Content (% dry)*				
1 1/2	x 3 1/2	x 13 1/2	in.	1 5.70	lbs.	20.5	19.3	20.2	19.1	19.3
1 1/2	x 3 1/2	x 13 1/2	in.	1 964	lbs.	20.4	20.6	21.0	20.8	20.3
1 1/2	x 3 1/2	x 13 1/2	in.	1 5.82	lbs.	19.1	19.3	19.9	19.2	19.2
1 1/2	x 3 1/2	x 13 1/2	in.	1 398	lbs.	20.8	20.6	21.0	20.9	20.3
1 1/2	x 3 1/2	x 13 1/2	in.	1 5.52	lbs.	20.1	20.6	20.4	20.3	20.2
1 1/2	x 3/4	x 5	in.	0 096	lbs.			19.6		
1 1/2	x 3/4	x 5	in.	0 106	lbs.			19.3		
1 1/2	x 3/4	x 5	in.	0 100	lbs.			19.4		
1 1/2	x 3/4	x 5	in.	0 138	lbs.			19.9		
1 1/2	x 3/4	x 5	in.	0 134	lbs.			20.0		
1 1/2	x 3/4	x 5	in.	0 124	lbs.			20.1		
1 1/2	x 3/4	x 5	in.	0 100	lbs.			19.3		
1 1/2	x 3/4	x 5	in.	0 110	lbs.			19.8		
1 1/2	x 3/4	x 5	in.	0 128	lbs.			19.2		
1 1/2	x 3/4	x 5	in.	0 116	lbs.			19.2		
1 1/2	x 3/4	x 5	in.	0 110	lbs.			19.6		
1 1/2	x 3/4	x 5	in.	0 130	lbs.			19.7		
1 1/2	x 3/4	x 5	in.	0 132	lbs.			19.7		
1 1/2	x 3/4	x 5	in.	0 098	lbs.			20.0		
1 1/2	x 3/4	x 5	in.	0 132	lbs.			20.1		
1 1/2	x 3/4	x 5	in.	0 130	lbs.			19.9		
	x	x	in.		lbs.					
	x	x	in.		lbs.					
	x	x	in.		lbs.					
	x	x	in.		lbs.					
	x	x	in.		lbs.					
	x	x	in.		lbs.					

TEST LOAD WEIGHT: 9.45 lbs Min 20%: 1.90 Max 25%: 2.36

POLYTESTS
TESTING THROUGH YOUR REALITY

DILUTION TUNNEL PARTICULATE SAMPLER DATA

Date: 2019-03-21 Manufacturer: Hearthstone Model: GM 40

Project #: pT 26189 Run: 5 Tech: M M Reviewer: [illegible]

		SYSTEM 1 – 1st hour				SYSTEM 1				
Pre-test Weight Record		Probe & Housing Number	Front Filter Number	Back Filter Number	gaskets	Probe & Housing Number	Front Filter Number	Back Filter Number	gaskets	Blanck
Date	Time	03	65	66	13	9	67	68	19	71
2019-03-21	17:00	61,4553	0,1304	0,1303	35,6611	61,4471	0,1260	0,1300	34,9956	0,1281
2019-03-25	9:00	61,4553	0,1304	0,1304	35,6611	61,4470	0,1260	0,1300	34,9957	0,1282

		SYSTEM 1 – 1st hour				SYSTEM 1				
Post-test Weight Record		Probe & Housing Number	Front Filter Number	Back Filter Number	gaskets	Probe & Housing Number	Front Filter Number	Back Filter Number	gaskets	Blanck
Date	Time	03	65	66	13	9	67	68	19	71
2019-03-25	18:30	61,4558	0,1302	0,1285	35,6643	61,4471	0,1259	0,1289	34,9971	0,1283
2019-04-01	8:00	61,4557	0,1302	0,1285	35,6642	61,4470	0,1259	0,1289	34,9970	0,1282
2019-04-02	8:00	61,4557	0,1302	0,1285	35,6642	61,4470	0,1259	0,1289	34,9970	0,1282

POLYTESTS
TESTING THROUGH YOUR REALITY

DILUTION TUNNEL PARTICULATE SAMPLER DATA

Date: 2019-03-21 Manufacturer: Hearthstone Model: GM 40

Project #: pT 20189 Run: 5 Tech: MM Reviewer: DP

		SYSTEM 2			
Pre-test Weight Record		Probe & Housing Number	Front Filter Number	Back Filter Number	gaskets
Date	Time	19	69	70	23
2019.03.21	17:00	109,0902	0,1278	0,1286	35,1920
2019.03.25	9:00	109 0903	0,1277	0,1285	35,1921

		SYSTEM 2			
Post-test Weight Record		Probe & Housing Number	Front Filter Number	Back Filter Number	gaskets
Date	Time	19	69	70	23
2019.03.25	18:30	109 0905	0,1280	0,1263	35,1953
2019.04.01	8:00	109 0905	0,1280	0,1263	35,1952
2019.04.02	8:00	109 0905	0,1280	0,1263	35,1952

Paramètres

Tous les facteurs de corrections et autres paramètres qui peuvent être modifiés par l'utilisateur du fichier sont regroupés ici.

Code verrouillage:	HEA

Description du test

Test standard	EPA	
Run #	5	
Date	25-03-2019	
Technicien	M.M	
Project #	PI 20189	

Description de l'unité

Manufacturier	HEARTHSTONE	
Modèle	GM40	
Combustion system	Cat	
Appliance type	WOODSTOVE	
Firebox volume	1,31	cu ft.
Appliance weight empty	N.A	lbs
Appliance weight full	N.A	lbs

Paramètres du test

Logging time	1	min
Manufacturer's rated heat output	N.A	BTU/h Donnée fournie par le manfacturier
Targeted category	4	
Targeted output	N.A	BTU/h
Cp steel	N.A	BTU/lb-°F

Échantillonnage

Blank sampling rate	0,20	cuft/min
Internal probe diameter	0,18	in.
Calibration Factor (DGM #1):	1,001	Dimensionless
Equipment number (DGM #1):	EM 178	
Calibration Factor (DGM #2):	0,987	Dimensionless
Equipment number (DGM #2):	EM 178	
Calibration Factor (DGM #3):	0,996	
Equipment number (DGM #3):	EM 070	Dimensionless

Tunnel

Targeted tunnel flow rate	180	scfm
Tunnel diameter	6	in.
Molecular weight	29	
Pitot tube type	Standard	
Pitot tube coefficient	0,99	Dimensionless

Project nu.	PI 20189
Date	25-03-2019
Technicien	M.M

Fuel data

Fuel type	Dimension	
Fuel specie	D. Fir	
HHV	19810,0	kJ/kg
%C	48,7	
%H	6,9	
%O	43,9	
%Ash	0,5	
HHV	8519,2	Btu/lb
LHV	7451,0	Btu/lb

Default Fuel Values

	D. Fir	Oak/Maple
HHV	19 810	19 887
%C	48,73	50
%H	6,87	6,6
%O	43,9	42,9
%Ash	0,5	0,5
HHV (Btu/lb)	8519	8552
LHV (Btu/lb)	7451	7480

	Start	End
Barometer (kPa):	102,1	102,1
Barometer (in.Hg):	30,150119	30,15011865
Dry Bulb (F):	68,9	71,68
Humidity (%):	21,9	24
Air velocity (ft/min)	0	0

DGM #1	Final:	31049,769	cuft	Final:	879231,540	Liter
	Initial:	31010,984	cuft	Initial:	878133,270	Liter
DGM #2	Final:	29280,458	cuft	Final:	829130,220	Liter
	Initial:	29242,116	cuft	Initial:	828044,500	Liter
DGM room				Final:	733,540	cuft
				Initial:	683,280	cuft

Numéro de la ligne dans "Raw data" à partir duquel les données du VRAI test commencent: 426

Autres données à rentrer: dans preload data, load data, traverse et filter set weight

Project nu.	PI 20189
Date	25-03-2019
Technicien	M.M

Preload data sheet

Test Load Weight:

Lower	Ideal	Upper
8,25	9,17	10,09

Load Volume: 0,5833 cu. ft

Loading Density: 17,687 lbs./ft3

Number of Spaces:

Spacer weight (lbs):

Load Density (wet): 39,720 lbs./ft3

Dry Wood Density: 33,036337

Piece Size (in): Thick	Wide	x Length	Weight lbs	Meter Moisture Content Dry Uncorrected %					Ave. MC x Weight	Volume Cubic Inches
1,5	3,5	8	0,756	20,8	20,9	20,4	20,3	20,7	15,58872	42,00
1,5	3,5	8	0,76	19,8	19,6	19,9	20,1	19,4	15,0176	42,00
1,5	3,5	8	0,768	20,6	20,8	20,4	20,9	20,7	15,88224	42,00
1,5	3,5	8	0,886	19,4	19,3	19,2	19,8	19,3	17,1884	42,00
1,5	3,5	8	0,876	20,4	20,9	20,8	20,3	20,6	18,0456	42,00
1,5	3,5	8	0,87	20,4	20,8	20,9	20,7	20,5	17,9742	42,00
1,5	3,5	8	0,912	19,9	19,3	19,8	19,7	19,4	17,89344	42,00
1,5	3,5	8	0,87	20,1	20,8	20,9	20,9	20,7	17,9916	42,00
1,5	3,5	8	0,878	19,6	19,4	19,8	19,3	19,7	17,17368	42,00
1,5	3,5	8	0,884	20,1	20,6	20,4	20,8	20,9	18,17504	42,00
1,5	3,5	8	0,926	19,3	19,8	19,6	19,3	19,3	18,01996	42,00
1,5	3,5	8	0,896	20,4	20,9	20,8	20,3	20,4	18,42176	42,00
1,5	3,5	8	0,916	20,9	21	21,1	21	21,2	19,27264	42,00
1,5	3,5	8	0,898	19,9	19,7	19,7	19,7	19,8	17,74448	42,00
										0,00
1,5	3,5	8	0,742	20,6	20,9	21	20,8	20,7	15,4336	42,00
1,5	3,5	8	0,844	20	19,9	19,6	19,8	19,7	16,7112	42,00
1,5	3,5	8	0,766	20,8	20,9	20,6	20,8	20,4	15,8562	42,00
1,5	3,5	8	0,82	20,9	20,6	20,9	20,4	20,3	16,9084	42,00
1,5	3,5	8	0,764	19,9	19,3	19,3	19,4	19,5	14,88272	42,00
1,5	3,5	8	0,8	20,6	20,3	20,8	20,9	20,7	16,528	42,00
1,5	3,5	8	0,748	19,9	19,3	19,3	19,6	19,6	14,61592	42,00
1,5	3,5	8	0,784	21	21,3	20,9	20,8	21	16,464	42,00
1,5	3,5	8	0,798	21,3	21	19,9	20,8	20,8	16,56648	42,00
1,5	3,5	8	0,814	20,9	20,6	20,3	20,7	20,8	16,81724	42,00
1,5	3,5	8	0,808	19,9	19,3	19,7	19,3	19,5	15,78832	42,00
1,5	3,5	8	0,794	20	20,3	20,6	20,9	20,3	16,21348	42,00
1,5	3,5	8	0,8	19,9	19,3	19,4	19,5	19,7	15,648	42,00
1,5	3,5	8	0,792	20	20,3	20,1	20	20,2	15,93504	42,00
										0,00
										0,00
										0,00
								SUM MC:	468,75796	

PreTest Load Weight: 23,17 lbs.

Dry Weight: 8,74 kg.

Average Moisture Content: %

Dry: 20,23

20,23

Must be 18-28

Wet: 16,83

must be 15,2-22

Project nu.	PI 20189
Date	25-03-2019
Technicien	M.M

FUEL LOAD DATA SHEET, CSA B415

Test Load Weight:

Lower	Ideal	Upper
8,3	9,2	10,1

* For boilers, a loading density factor of 10 lb/ft3 is applied

Load Volume: 0,21 cu. ft

Loading Density: 7,2 lbs./ft3

Number of Spaces: 16

Spacer weight: lbs

Load Density (wet): 36,9 lbs./ft3

Dry Wood Density: 30,7 lbs./ft3

Piece Size (in): Thick	Wide	Length	Weight lbs	Meter Moisture Content Dry Uncorrected %					Ave. MC x Weight	Volume Cubic Inches	Ave. MC %
1,5	3,5	13,5	1,57	20,50	19,30	20,20	19,10	19,30	30,8976	70,88	19,7
1,5	3,5	13,5	1,46	20,40	20,60	21,00	20,80	20,30	30,18768	70,88	20,6
1,5	3,5	13,5	1,58	19,10	19,30	19,90	19,20	19,20	30,59588	70,88	19,3
1,5	3,5	13,5	1,40	20,80	20,60	21,00	20,90	20,30	28,96656	70,88	20,7
1,5	3,5	13,5	1,55	20,10	20,60	20,40	20,30	20,20	31,53664	70,88	20,3
1,5	0,75	5	0,10			19,60			1,8816	5,63	19,6
1,5	0,75	5	0,11			19,30			2,0458	5,63	19,3
1,5	0,75	5	0,10			19,40			1,94	5,63	19,4
1,5	0,75	5	0,14			19,90			2,7462	5,63	19,9
1,5	0,75	5	0,13			20,00			2,68	5,63	20,0
1,5	0,75	5	0,12			20,10			2,4924	5,63	20,1
1,5	0,75	5	0,10			19,30			1,93	5,63	19,3
1,5	0,75	5	0,11			19,80			2,178	5,63	19,8
1,5	0,75	5	0,13			19,20			2,4576	5,63	19,2
1,5	0,75	5	0,12			19,20			2,2272	5,63	19,2
1,5	0,75	5	0,11			19,60			2,156	5,63	19,6
1,5	0,75	5	0,13			19,70			2,561	5,63	19,7
1,5	0,75	5	0,13			19,70			2,6004	5,63	19,7
1,5	0,75	5	0,10			20,00			1,96	5,63	20,0
1,5	0,75	5	0,132			20,10			2,6532	5,63	20,1
1,5	0,75	5	0,13			19,90			2,587	5,63	19,9
										0,00	
										0,00	
										0,00	
										0,00	
										0,00	
										0,00	
										0,00	
										0,00	
										0,00	
								SUM MCx	189,28076		19,8 %

Test Load Weight: 9,45 lbs.

Dry Weight: 3,57 kg.

Average Moisture Content: %

Dry: 20,03 Dry(EPA) 20,03 Dry(B415 20,03

20,03 Must be 19-25

Wet: 16,69 must be 15,2-22

Coal Bed Range: 1,9 lbs. to 2,4 lbs.

TEST CHARGE:

Coal bed weight: 2,4 lbs.

Project nu.	PI 20189
Date	25-03-2019
Technicien	M.M

Tunnel Traverse Worksheet (for velocity calculations)

Static Pressure: 0,35 in. H20
Barometer: 29,900 in. Hg

Pour un tunnel de 12" et plus, prendre 6 lectures

	TUNNEL VELOCITY	TUNNEL TEMP	SQUARE ROOT
	In. wc	°F	
A center			0,0000
B center			0,0000
A1			0,0000
A2			0,0000
A3			0,0000
A4			0,0000
A5			0,0000
A6			0,0000
B1			0,0000
B2			0,0000
B3			0,0000
B4			0,0000
B5			0,0000
B6			0,0000
AVERAGE	#DIV/0!	#DIV/0!	0,0000

PITOT CONSTANT=
0,931

Pour un tunnel moins de 12", prendre 4 lectures

	TUNNEL VELOCITY	TUNNEL TEMP	SQUARE ROOT
	In. wc	°F	
A center	0,060	66,75	0,2449
B center	0,061	66,56	0,2470
A1	0,047	66,83	0,2168
A2	0,050	66,79	0,2236
A3	0,051	66,76	0,2258
A4	0,048	66,65	0,2191
B1	0,048	66,600	0,2191
B2	0,053	66,680	0,2302
B3	0,059	66,730	0,2429
B4	0,049	66,730	0,2214
AVERAGE	0,0526	66,7080	0,2291

Project nu.	PI 20189
Date	25-03-2019
Technicien	M.M

Filter set weight

	System 1 (g) 1st hour				System 1 (g)				System 2 (g)				Ambient blank (g)	Date	Heure
	probe	front	back	gasket	probe	front	back	gasket	probe	front	back	gasket	Filter		
Number	3	65	66	13	9	67	68	19	19	69	70	23	71		
Before (1)															
Before (2)															
Before (3)															
Before (4)															
Before (5)	61,4553	0,1304	0,1303	35,6611	61,4471	0,1260	0,1300	34,9956	109,0902	0,1278	0,1286	35,1920	0,1281	2019-03-21	17:00
Before (6)	61,4553	0,1304	0,1304	35,6611	61,4470	0,1260	0,1300	34,9957	109,0903	0,1277	0,1285	35,1921	0,1282	2019-03-25	09:00
After (1)	61,4558	0,1302	0,1285	35,6643	61,4471	0,1259	0,1289	34,9971	109,0905	0,1280	0,1263	35,1953	0,1283	2019-03-25	18:30
After (2)	61,4557	0,1302	0,1285	35,6642	61,4470	0,1259	0,1289	34,9970	109,0905	0,1280	0,1263	35,1952	0,1282	2019-04-01	08:00
After (3)	61,4557	0,1302	0,1285	35,6642	61,4470	0,1259	0,1289	34,9970	109,0905	0,1280	0,1263	35,1952	0,1282	2019-04-02	08:00
After (4)															
After (5)															
After (6)	61,4557	0,1302	0,1285	35,6642	61,4470	0,1259	0,1289	34,9970	109,0905	0,1280	0,1263	35,1952	0,1282	2019-04-02	08:00
Difference	0,0004	-0,0002	-0,0019	0,0031	0,0000	-0,0001	-0,0011	0,0013	0,0002	0,0003	-0,0022	0,0031	0,0000		
Total (mg)		1,4				1,5				1,4			0		
Total ajusté (mg)		**1,40**				**1,50**				**1,40**					

Project nu.	PI 20189
Date	25-03-2019
Technicien	M.M

Demonstration purpose only

Filter set weight

	System 1 (g) 1st hour				System 1 (g)				System 2 (g)				Ambient blank (g)	Date	Heure
	probe	front	back	gasket	probe	front	back	gasket	probe	front	back	gasket	Filter		
Number	3	65	66	13	9	67	68	19	19	69	70	23	71		
Before (1)															
Before (2)															
Before (3)															
Before (4)															
Before (5)	61,4553	0,1304	0,1303	35,6611	61,4471	0,1260	0,1300	34,9956	109,0902	0,1278	0,1286	35,1920	0,1281	2019-03-21	17:00
Before (6)	61,4553	0,1304	0,1304	35,6611	61,4470	0,1260	0,1300	34,9957	109,0903	0,1277	0,1285	35,1921	0,1282	2019-03-25	09:00
After (1)	61,4558	0,1302	0,1285	35,6643	61,4471	0,1259	0,1289	34,9971	109,0905	0,1280	0,1263	35,1953	0,1283	2019-03-25	18:30
After (2)	61,4557	0,1302	0,1285	35,6642	61,4470	0,1259	0,1289	34,9970	109,0905	0,1280	0,1263	35,1952	0,1282	2019-04-01	08:00
After (3)	61,4557	0,1302	0,1285	35,6642	61,4470	0,1259	0,1289	34,9970	109,0905	0,1280	0,1263	35,1952	0,1282	2019-04-02	08:00
After (4)															
After (5)															
After (6)	61,4557	0,1304	0,1304	35,6642	61,4470	0,1260	0,1289	34,9970	109,0905	0,1280	0,1285	35,1952	0,1282	2019-04-02	08:00
Difference	0,0004	0,0000	0,0000	0,0031	0,0000	0,0000	-0,0011	0,0013	0,0002	0,0003	0,0000	0,0031	0,0000		
Total (mg)		3,5				3,7				3,6			0		
Total ajusté (mg)		**3,50**				**3,70**				**3,60**					

Project nu.	PI 20189
Date	25-03-2019
Technicien	M.M

emission rate 1,0g/hr filter negative weight rounded to zero, not the compliance number only for demonstration

*		*	*	*	*	*1	*2	*3	*4	*5	*6	*7	*8	*	Mass flow 1	DGM 1	DGM 1	Filter 1	Mass flow 2	DGM 2	DGM 2	Filter 2
Elapsed		Weight				Flue	Room	Tunnel	Unit	Unit	Unit	Unit	Unit	Catalyst	Reading	Inlet T	Outlet T	Temp	Reading	Inlet T	Outlet T	Temp
Time	Raw data row	Remaining	CO	CO_2	O_2	Gas	Temp	Dry Bulb	Top	Back	R.Side	L.Side	Bottom	up								
min		lbs	%	%	%	°F	°F	°F	°F	°F	°F	°F	°F	°F	cuft/min	oF	oF	oF	cuft/min	oF	oF	oF
0,00	426,00	9,5	0,0	3,9	0,0	250,1	67,3	94,8	337,7	399,0	352,3	351,0	428,4	500,0	0,19	70,52	70,64	70,45	0,18	70,85	71,26	70,33
1,0	427,0	9,4	0,0	1,4	0,0	271,2	67,5	88,1	335,7	398,1	351,9	350,2	426,1	506,4	0,19	70,51	70,69	70,46	0,18	70,85	71,27	70,35
2,0	428,0	9,3	0,0	3,8	0,0	296,1	67,4	88,8	335,7	396,9	351,7	349,1	423,7	566,4	0,19	70,59	70,70	70,47	0,18	70,82	71,31	70,41
3,0	429,0	9,2	0,0	4,7	0,0	317,2	67,6	90,1	337,2	395,3	348,3	347,9	419,9	617,4	0,19	70,65	70,74	70,53	0,19	70,85	71,31	70,51
4,0	430,0	9,1	0,0	1,3	0,0	336,5	67,7	93,2	345,2	393,6	348,7	346,1	417,5	662,9	0,19	70,71	70,78	70,61	0,19	70,85	71,34	70,70
5,0	431,0	9,0	0,0	2,1	0,0	303,7	67,9	86,7	354,2	391,8	346,9	345,0	414,9	656,2	0,19	70,95	70,82	70,65	0,18	70,97	71,37	70,65
6,0	432,0	9,0	0,0	1,4	0,0	283,2	68,2	85,9	355,8	390,1	345,9	343,8	413,0	617,2	0,19	71,24	70,93	70,72	0,18	71,12	71,41	70,70
7,0	433,0	8,9	0,0	4,6	0,0	270,0	68,7	85,8	355,7	388,1	343,6	342,4	411,4	582,1	0,19	71,54	71,04	70,80	0,19	71,32	71,46	70,79
8,0	434,0	8,9	0,0	4,6	0,0	263,2	69,3	86,2	354,8	386,0	342,4	340,2	409,4	571,5	0,19	71,88	71,12	70,88	0,18	71,53	71,55	70,90
9,0	435,0	8,8	0,0	5,8	0,0	265,0	69,4	86,7	356,2	383,8	340,4	338,6	407,1	596,4	0,19	72,18	71,23	70,98	0,19	71,75	71,65	71,03
10,0	436,0	8,6	0,0	11,6	0,0	273,4	69,5	87,4	363,5	381,7	338,2	336,8	404,7	649,8	0,19	72,38	71,32	71,08	0,18	71,92	71,73	71,17
11,0	437,0	8,5	0,2	13,8	0,0	279,4	69,5	87,0	372,1	379,8	336,0	335,1	401,7	657,4	0,19	72,55	71,41	71,20	0,19	72,07	71,82	71,29
12,0	438,0	8,4	0,0	11,6	0,0	283,0	69,4	87,1	381,2	378,1	334,3	334,0	399,2	670,1	0,19	72,65	71,50	71,27	0,19	72,20	71,88	71,37
13,0	439,0	8,3	0,0	11,2	0,0	289,5	69,2	87,7	389,5	376,5	332,7	332,9	396,8	718,1	0,19	72,70	71,56	71,36	0,18	72,27	71,93	71,51
14,0	440,0	8,2	0,1	14,3	0,0	298,2	69,4	88,4	397,4	375,1	331,0	332,5	394,3	732,2	0,19	72,75	71,62	71,48	0,19	72,35	71,98	71,67
15,0	441,0	8,0	0,0	14,5	0,0	307,4	69,6	88,3	405,2	374,0	330,1	332,4	392,0	749,4	0,19	72,73	71,66	71,57	0,19	72,41	72,01	71,77
16,0	442,0	7,9	0,1	14,6	0,0	317,6	69,7	88,4	413,9	373,2	329,2	331,7	389,0	782,7	0,19	72,61	71,68	71,66	0,18	72,38	72,02	71,91
17,0	443,0	7,7	0,3	16,4	0,0	326,4	69,7	88,4	425,3	372,6	328,6	331,7	386,4	805,6	0,19	72,46	71,66	71,76	0,19	72,31	72,04	72,02
18,0	444,0	7,6	0,2	15,6	0,0	334,6	69,7	89,3	435,2	372,2	328,8	332,2	383,5	834,2	0,19	72,38	71,68	71,84	0,19	72,29	72,04	72,13
19,0	445,0	7,4	0,7	16,3	0,0	341,6	69,4	89,6	445,9	372,0	327,9	332,8	380,6	848,3	0,19	72,26	71,66	71,95	0,18	72,23	72,04	72,25
20,0	446,0	7,3	0,2	16,8	0,0	343,6	69,9	89,5	455,9	372,0	328,9	333,5	377,8	826,8	0,19	72,12	71,62	72,00	0,18	72,13	72,02	72,28
21,0	447,0	7,1	0,6	16,2	0,0	345,3	70,1	89,4	466,2	372,3	328,1	334,6	375,5	813,9	0,19	72,00	71,61	72,11	0,19	72,05	72,02	72,37
22,0	448,0	7,0	0,5	15,7	0,0	345,9	69,9	89,5	474,4	372,8	329,8	335,3	373,1	796,3	0,19	71,89	71,57	72,18	0,19	71,99	72,01	72,50
23,0	449,0	6,9	0,6	15,7	0,0	346,5	69,6	89,6	483,0	373,4	329,6	337,2	371,0	791,3	0,19	71,87	71,58	72,25	0,19	71,95	72,01	72,59
24,0	450,0	6,7	0,8	15,8	0,0	347,3	70,0	89,9	491,7	374,1	331,0	338,5	368,9	796,8	0,19	71,80	71,55	72,32	0,19	71,86	71,99	72,66
25,0	451,0	6,6	0,5	16,0	0,0	350,1	69,8	90,5	498,6	375,0	332,0	340,3	366,7	824,3	0,19	71,72	71,54	72,39	0,18	71,77	71,97	72,76
26,0	452,0	6,5	0,5	16,9	0,0	353,2	69,8	90,8	506,6	376,0	333,6	342,3	365,0	853,7	0,19	71,73	71,53	72,45	0,19	71,74	71,95	72,85
27,0	453,0	6,3	0,9	17,1	0,0	356,6	70,2	90,7	513,0	377,1	334,6	344,0	362,9	866,5	0,19	71,68	71,48	72,52	0,18	71,70	71,93	72,94
28,0	454,0	6,2	0,9	17,3	0,0	359,0	69,9	90,4	521,3	378,3	335,6	346,3	361,0	871,0	0,19	71,66	71,47	72,58	0,19	71,64	71,92	73,01
29,0	455,0	6,0	0,9	17,3	0,0	360,3	69,8	90,7	527,3	379,7	338,2	348,3	359,4	872,5	0,19	71,66	71,45	72,63	0,19	71,63	71,91	73,09
30,0	456,0	5,9	1,1	17,3	0,0	362,0	70,0	91,0	533,9	381,2	339,9	350,6	357,7	875,4	0,19	71,73	71,45	72,68	0,19	71,64	71,91	73,15
31,0	457,0	5,7	1,1	17,3	0,0	363,5	70,1	91,3	540,9	382,9	341,6	352,9	356,3	877,3	0,19	71,79	71,43	72,74	0,19	71,65	71,86	73,22
32,0	458,0	5,6	1,3	17,2	0,0	364,6	70,4	91,6	546,3	384,8	344,4	355,1	354,8	881,6	0,19	71,88	71,45	72,80	0,18	71,70	71,87	73,28
33,0	459,0	5,5	1,3	17,2	0,0	365,3	70,6	92,0	552,8	386,9	345,9	358,2	353,2	883,9	0,19	72,00	71,45	72,88	0,19	71,75	71,85	73,38
34,0	460,0	5,3	1,4	17,2	0,0	366,2	70,2	91,5	556,6	389,2	349,2	360,7	351,7	880,9	0,19	72,00	71,44	72,95	0,19	71,76	71,87	73,46
35,0	461,0	5,2	1,6	17,2	0,0	366,7	70,7	91,5	561,6	391,6	350,5	363,2	350,0	881,1	0,19	72,01	71,42	73,01	0,19	71,75	71,85	73,54
36,0	462,0	5,1	1,7	17,2	0,0	367,6	70,2	92,0	568,5	394,1	352,7	366,3	348,8	882,4	0,19	72,04	71,43	73,08	0,19	71,78	71,86	73,61
37,0	463,0	4,9	1,9	17,2	0,0	368,2	70,6	92,0	572,8	396,7	355,4	368,8	347,2	878,2	0,19	72,04	71,41	73,14	0,19	71,78	71,85	73,70
38,0	464,0	4,8	2,1	17,2	0,0	368,3	70,4	92,2	579,9	399,3	358,0	372,3	345,9	873,1	0,19	72,03	71,40	73,17	0,19	71,78	71,85	73,74
39,0	465,0	4,6	2,3	17,2	0,0	368,9	70,5	92,0	586,6	402,1	361,0	375,2	345,0	873,5	0,19	72,05	71,41	73,27	0,19	71,78	71,86	73,81
40,0	466,0	4,5	2,6	17,2	0,0	368,9	70,3	92,7	592,6	405,0	364,1	378,2	344,0	869,3	0,19	72,09	71,41	73,30	0,18	71,79	71,87	73,87
41,0	467,0	4,3	2,7	17,2	0,0	368,5	70,5	92,4	597,9	408,0	366,9	381,4	342,9	868,9	0,19	72,15	71,41	73,34	0,19	71,84	71,89	73,92
42,0	468,0	4,2	2,9	17,0	0,0	368,2	70,5	92,4	600,4	411,1	369,3	384,3	341,9	863,7	0,19	72,27	71,41	73,40	0,19	71,90	71,90	73,98
43,0	469,0	4,1	2,8	17,0	0,0	366,8	70,6	92,4	604,0	414,3	372,6	387,4	340,4	865,7	0,19	72,32	71,41	73,45	0,19	71,93	71,89	74,02
44,0	470,0	3,9	2,6	17,0	0,0	366,4	70,8	92,2	607,5	417,5	375,8	390,5	338,9	867,7	0,19	72,37	71,42	73,50	0,19	71,97	71,90	74,07
45,0	471,0	3,8	2,2	17,1	0,0	366,2	71,3	91,9	611,7	420,7	379,9	393,2	337,8	871,8	0,19	72,51	71,45	73,56	0,19	72,04	71,91	74,14
46,0	472,0	3,7	1,9	17,1	0,0	365,1	70,9	91,8	614,6	423,8	381,8	396,9	335,7	876,7	0,19	72,60	71,45	73,59	0,18	72,10	71,91	74,17
47,0	473,0	3,6	1,6	17,1	0,0	364,8	70,8	91,6	616,8	426,9	384,6	399,3	333,7	882,9	0,19	72,57	71,45	73,66	0,19	72,09	71,92	74,24
48,0	474,0	3,5	1,4	17,1	0,0	364,2	70,7	91,9	619,2	429,8	387,5	403,0	331,7	884,6	0,19	72,57	71,45	73,67	0,19	72,12	71,92	74,27
49,0	475,0	3,4	1,1	17,1	0,0	363,8	71,1	91,8	619,7	432,7	390,1	405,9	329,7	888,1	0,19	72,54	71,43	73,72	0,18	72,11	71,93	74,32
50,0	476,0	3,3	0,9	17,0	0,0	363,4	71,2	91,7	621,0	435,5	393,3	408,6	327,8	888,7	0,19	72,53	71,43	73,72	0,18	72,16	71,97	74,37
51,0	477,0	3,2	0,7	16,9	0,0	362,8	71,1	91,5	620,1	438,1	396,8	411,6	326,1	887,5	0,19	72,46	71,42	73,75	0,19	72,11	71,92	74,38
52,0	478,0	3,1	0,6	16,8	0,0	360,8	71,3	91,4	620,0	440,6	399,9	414,4	324,7	885,0	0,19	72,54	71,42	73,77	0,19	72,15	71,94	74,42
53,0	479,0	3,0	0,4	16,4	0,0	358,3	70,8	91,1	620,5	442,8	402,1	417,6	323,2	875,5	0,19	72,71	71,44	73,86	0,19	72,22	71,92	74,43
54,0	480,0	2,9	0,2	16,1	0,0	356,3	71,1	91,0	618,7	445,1	405,1	420,1	321,6	861,9	0,19	72,82	71,45	73,88	0,19	72,31	71,93	74,47
55,0	481,0	2,8	0,1	15,9	0,0	353,7	70,9	90,5	615,6	447,1	407,5	422,8	320,4	858,7	0,19	72,91	71,46	73,92	0,19	72,34	71,94	74,47
56,0	482,0	2,8	0,0	15,8	0,0	350,8	71,0	90,3	612,5	449,1	410,3	425,3	319,4	858,2	0,19	72,91	71,47	73,93	0,19	72,36	71,96	74,50
57,0	483,0	2,7	0,0	15,3	0,0	347,6	70,8	89,9	613,4	450,9	412,2	427,8	318,5	844,5	0,19	72,85	71,46	73,93	0,19	72,36	71,92	74,50
58,0	484,0	2,6	0,0	14,6	0,0	344,5	71,2	89,4	610,5	452,7	415,0	429,6	318,1	825,7	0,19	72,85	71,46	73,99	0,19	72,38	71,95	74,54
59,0	485,0	2,6	0,0	13,7	0,0	340,5	71,5	89,7	609,5	454,2	418,0	431,3	317,8	807,7	0,19	72,93	71,50	74,02	0,18	72,40	71,94	74,55
60,0	486,0	2,5	0,0	13,1	0,0	336,8	70,9	89,1	606,9	455,5	419,5	433,4	317,4	796,7	0,19	72,95	71,50	74,03	0,19	72,41	71,94	74,56
61,0	487,0	2,5	0,0	12,7	0,0	332,7	71,2	87,5	604,4	456,5	421,3	434,6	317,2	784,7	0,19	72,91	71,51	74,04	0,19	72,40	71,94	70,66
62,0	488,0	2,4	0,0	12,5	0,0	328,4	70,7	87,9	600,5	457,5	423,5	435,8	317,1	773,1	0,19	72,90	71,50	74,04	0,19	72,39	71,94	70,72
63,0	489,0	2,4	0,0	12,0	0,0	324,8	71,3	88,2	596,8	458,2	426,7	435,9	317,4	763,4	0,19	72,97	71,54	74,05	0,19	72,47	71,93	70,72
64,0	490,0	2,3	0,0	11,4	0,0	321,0	70,8	87,9	591,7	458,7	427,1	437,0	317,2	759,5	0,19	73,02	71,55	74,07	0,19	72,50	71,95	70,79
65,0	491,0	2,3	0,0	11,4	0,0	317,1	70,9	87,8	586,1	459,2	428,1	437,3	317,0	759,3	0,19	72,91	71,53	74,08	0,18	72,47	71,94	70,84
66,0	492,0	2,2	0,0	11,4	0,0	314,4	71,1	87,0	579,9	459,6	430,8	436,9	317,3	754,4	0,19	72,92	71,57	74,09	0,19	72,48	71,96	70,95
67,0	493,0	2,2	0,0	11,0	0,0	311,0	70,6	87,7	576,6	460,0	432,1	436,9	317,5	747,3	0,19	73,03	71,57	74,08	0,19	72,52	71,96	70,99
68,0	494,0	2,2	0,0	10,8	0,0	308,3	70,8	87,2	570,5	460,2	432,0	437,0	317,5	738,4	0,19	73,03	71,57	74,10	0,19	72,51	71,98	71,05
69,0	495,0	2,1	0,0	10,5	0,0	305,8	71,1	86,8	565,0	460,2	433,0	436,4	317,5	733,3	0,19	72,78	71,56	74,07	0,19	72,38	71,98	71,13
70,0	496,0	2,1	0,0	10,3	0,0	303,6	71,0	86,6	557,8	460,1	435,1	435,1	317,9	736,6	0,19	72,62	71,54	74,07	0,19	72,33	71,97	71,20
71,0	497,0	2,1	0,0	10,3	0,0	301,4	70,7	86,1	551,5	459,9	434,3	434,4	317,8	737,1	0,19	72,54	71,52	74,03	0,19	72,26	71,96	71,28
72,0	498,0	2,0	0,0	10,4	0,0	299,2	70,7	85,5	545,5	459,5	435,5	433,3	318,0	733,9	0,19	72,44	71,48	74,02	0,19	72,17	71,95	71,32
73,0	499,0	2,0	0,0	10,3	0,0	297,0	71,0	85,1	540,5	459,2	435,7	431,3	318,6	728,8	0,19	72,44	71,49	74,02	0,18	72,16	71,94	71,40
74,0	500,0	2,0	0,0	10,0	0,0	294,5	70,5	85,2	536,3	458,8	435,0	431,1	318,9	721,1	0,19	72,48	71,48	73,98	0,19	72,15	71,93	71,48
75,0	501,0	2,0	0,0	9,4	0,0	292,3	70,4	85,0	530,3	458,4	436,0	429,6	319,6	713,1	0,19	72,33	71,45	73,96	0,19	72,08	71,92	71,54
76,0	502,0	2,0	0,0	9,0	0,0	290,1	70,5	85,1	523,1	458,0	435,4	428,4	320,1	711,2	0,19	72,32	71,44	73,94	0,19	72,07	71,91	71,62
77,0	503,0	1,9	0,0	8,9	0,0	288,7	70,6	84,6	517,3	457,5	434,8	427,1	320,5	709,9	0,19	72,33	71,40	73,91	0,19	72,06	71,89	71,66
78,0	504,0	1,9	0,0	8,8	0,0	286,5	71,0	84,2	511,9	457,1	434,3	425,8	321,6	711,2	0,19	72,39	71,45	73,91	0,19	72,07	71,86	71,75
79,0	505,0	1,9	0,0	8,7	0,0	284,6	71,1	84,7	505,8	456,6	434,6	424,0	322,1	711,4	0,19	72,54	71,50	73,92	0,19	72,18	71,88	71,79
80,0	506,0	1,9	0,0	8,8	0,0	282,9	71,2	86,0	501,1	456,0	434,1	423,1	322,8	710,9	0,19	72,73	71,56	73,90	0,19	72,29	71,94	71,88
81,0	507,0	1,9	0,0	8,9	0,0	281,0	71,2	86,5	496,2	455,5	433,8	421,1	323,7	710,3	0,19	72,99	71,65	73,92	0,19	72,49	72,02	71,90
82,0	508,0	1,8	0,0	8,8	0,0	279,1	71,3	87,7	491,2	455,1	432,9	419,6	324,5	709,7	0,19	73,28	71,73	73,93	0,19	72,69	72,12	72,02
83,0	509,0	1,8	0,0	9,0	0,0	277,5	71,8	88,4	486,5	454,6	431,9	418,1	325,3	707,6	0,19	73,56	71,86	73,95	0,19	72,92	72,23	72,14
84,0	510,0	1,8	0,0	9,1	0,0	276,3	71,4	88,0	481,6	454,1	430,9	416,7	326,2	708,9	0,19	73,82	71,93	74,01	0,19	73,13	72,30	72,24
85,0	511,0	1,8	0,0	9,1	0,0	275,5	72,0	87,8	477,3	453,6	429,2	415,1	326,6	705,1	0,19	74,10	72,05	74,02	0,19	73,35	72,42	72,33
86,0	512,0	1,8	0,0	9,2	0,0	274,0	71,2	87,3	472,4	453,1	428,1	413,5	327,3	700,6	0,19	74,21	72,12	74,04	0,19	73,49	72,50	72,42
87,0	513,0	1,7	0,0	9,3	0,0	272,7	71,7	86,7	468,6	452,6	426,4	411,9	327,7	696,6	0,19	74,22	72,18	74,08	0,19	73,61	72,57	72,52
88,0	514,0	1,7	0,0	9,3	0,0	272,0	71,7	86,4	465,7	452,0	424,8	410,6	328,3	693,4	0,19	74,15	72,22	74,07	0,19	73,64	72,63	72,58

89,0	515,0	1,7	0,0	9,2	0,0	270,2	71,4	86,5	462,0	451,5	423,4	408,9	329,1	688,7	0,19	74,10	72,25	74,11	0,19	73,65	72,66	72,69
90,0	516,0	1,7	0,0	9,3	0,0	269,8	71,5	85,5	458,6	451,0	421,7	407,8	329,7	685,7	0,19	73,96	72,27	74,14	0,19	73,60	72,68	72,75
91,0	517,0	1,7	0,0	9,1	0,0	268,7	71,5	84,7	453,6	450,5	419,2	406,4	329,7	682,2	0,19	73,82	72,29	74,15	0,19	73,54	72,70	72,82
92,0	518,0	1,6	0,0	9,1	0,0	267,6	71,1	84,4	451,4	449,8	418,1	405,3	330,0	677,9	0,19	73,64	72,28	74,13	0,19	73,45	72,70	72,86
93,0	519,0	1,6	0,0	9,1	0,0	266,0	71,3	84,1	446,9	449,2	415,8	404,4	330,6	674,8	0,19	73,45	72,26	74,13	0,19	73,34	72,69	72,93
94,0	520,0	1,6	0,0	9,0	0,0	264,8	71,3	83,6	443,2	448,7	414,9	403,4	330,6	670,6	0,19	73,29	72,25	74,16	0,19	73,25	72,68	72,97
95,0	521,0	1,6	0,0	9,1	0,0	263,8	71,0	83,4	439,9	448,1	412,9	401,7	330,9	666,6	0,19	73,13	72,22	74,12	0,19	73,14	72,66	73,01
96,0	522,0	1,6	0,0	9,1	0,0	262,5	71,5	83,0	437,8	447,5	412,5	400,7	331,3	662,9	0,19	73,14	72,23	74,11	0,19	73,12	72,65	73,04
97,0	523,0	1,5	0,0	8,9	0,0	260,9	71,3	83,1	434,9	446,8	410,1	399,8	331,9	661,4	0,19	73,21	72,22	74,06	0,19	73,13	72,64	73,04
98,0	524,0	1,5	0,0	9,1	0,0	260,1	71,3	83,0	432,5	446,4	409,3	398,8	331,9	659,7	0,19	73,12	72,21	74,07	0,19	73,07	72,60	73,12
99,0	525,0	1,5	0,0	9,1	0,0	259,3	71,3	83,0	430,1	445,8	407,5	398,0	332,2	658,3	0,19	73,02	72,20	74,09	0,19	73,02	72,61	73,14
100,0	526,0	1,5	0,0	9,1	0,0	258,4	71,2	82,8	427,2	445,3	406,3	396,8	332,1	657,9	0,19	72,90	72,18	74,06	0,19	72,92	72,58	73,15
101,0	527,0	1,5	0,0	9,1	0,0	257,6	71,2	83,1	424,6	444,7	404,9	396,2	332,0	657,4	0,19	72,74	72,14	74,04	0,19	72,80	72,57	73,16
102,0	528,0	1,4	0,0	9,1	0,0	256,8	70,9	82,6	422,7	444,2	403,1	395,1	332,3	657,4	0,19	72,64	72,13	74,01	0,19	72,73	72,55	73,17
103,0	529,0	1,4	0,0	9,1	0,0	256,3	70,9	82,5	421,3	443,7	403,1	393,8	332,9	657,4	0,19	72,53	72,10	73,99	0,19	72,65	72,53	73,17
104,0	530,0	1,4	0,0	9,0	0,0	255,5	71,1	83,1	418,7	443,2	401,4	393,0	332,9	656,9	0,19	72,45	72,09	73,99	0,19	72,56	72,52	73,20
105,0	531,0	1,4	0,0	9,1	0,0	255,0	70,9	82,4	416,7	442,6	400,8	392,0	333,1	656,4	0,19	72,43	72,07	73,96	0,18	72,51	72,48	73,20
106,0	532,0	1,4	0,0	9,1	0,0	254,3	71,0	82,6	414,9	442,1	400,0	390,3	333,4	655,6	0,19	72,40	72,07	73,93	0,19	72,50	72,50	73,20
107,0	533,0	1,4	0,0	9,0	0,0	254,3	68,7	81,5	414,3	441,6	398,9	389,5	334,3	655,7	0,19	72,45	72,04	73,89	0,19	72,49	72,47	73,15
108,0	534,0	1,3	0,0	9,0	0,0	254,1	69,9	81,4	414,0	441,2	398,1	388,5	334,6	655,1	0,19	72,35	72,03	73,82	0,18	72,47	72,45	73,12
109,0	535,0	1,3	0,0	9,0	0,0	253,6	69,6	82,1	411,6	440,8	396,9	387,3	334,4	654,1	0,19	72,22	71,99	73,74	0,19	72,40	72,46	73,10
110,0	536,0	1,3	0,0	9,0	0,0	253,1	70,2	81,8	410,6	440,3	395,7	386,8	334,5	654,3	0,19	72,08	71,96	73,70	0,19	72,28	72,44	73,05
111,0	537,0	1,3	0,0	9,0	0,0	252,7	70,2	82,0	409,5	439,9	395,0	385,5	334,5	654,2	0,19	71,95	71,93	73,64	0,19	72,16	72,41	73,04
112,0	538,0	1,3	0,0	8,9	0,0	252,0	70,2	81,9	406,9	439,5	393,2	384,8	334,2	654,6	0,19	71,89	71,91	73,62	0,19	72,08	72,40	73,01
113,0	539,0	1,3	0,0	8,9	0,0	251,5	70,1	81,2	405,8	439,0	392,0	383,9	334,2	654,4	0,19	71,87	71,89	73,59	0,19	72,02	72,38	72,98
114,0	540,0	1,2	0,0	8,9	0,0	251,4	70,2	81,4	405,5	438,6	391,3	383,1	334,5	652,6	0,19	71,90	71,86	73,56	0,18	72,01	72,34	72,97
115,0	541,0	1,2	0,0	9,0	0,0	251,2	70,5	81,5	403,2	438,2	389,8	382,4	334,0	651,7	0,19	71,93	71,84	73,54	0,19	72,01	72,31	72,95
116,0	542,0	1,2	0,0	8,9	0,0	251,3	70,4	81,7	402,3	437,7	388,9	381,8	334,1	652,1	0,19	71,98	71,84	73,49	0,19	72,01	72,29	72,95
117,0	543,0	1,2	0,0	8,9	0,0	250,8	70,6	81,3	400,6	437,2	388,1	381,2	334,0	652,9	0,19	71,89	71,81	73,44	0,19	71,97	72,23	72,94
118,0	544,0	1,2	0,0	8,9	0,0	250,4	70,4	81,1	400,1	436,8	386,8	380,4	334,2	653,4	0,19	71,85	71,79	73,40	0,19	71,93	72,20	72,90
119,0	545,0	1,1	0,0	8,8	0,0	249,9	70,4	81,0	398,5	436,3	385,3	379,6	334,0	652,6	0,19	71,80	71,76	73,38	0,19	71,89	72,18	72,88
120,0	546,0	1,1	0,0	8,8	0,0	249,6	70,6	81,2	398,4	435,9	385,9	378,7	334,1	652,0	0,19	71,78	71,75	73,37	0,19	71,87	72,16	72,87
121,0	547,0	1,1	0,0	8,7	0,0	249,4	70,5	81,0	396,4	435,5	384,4	378,0	334,5	652,1	0,19	71,85	71,75	73,33	0,19	71,92	72,16	72,86
122,0	548,0	1,1	0,0	8,7	0,0	249,0	70,7	81,1	395,6	435,0	383,1	377,1	334,2	651,4	0,19	71,76	71,72	73,29	0,19	71,86	72,14	72,86
123,0	549,0	1,1	0,0	8,7	0,0	249,1	70,5	80,9	395,0	434,5	381,8	376,5	334,2	651,0	0,19	71,64	71,69	73,26	0,19	71,77	72,13	72,84
124,0	550,0	1,1	0,0	8,7	0,0	248,8	70,5	80,9	394,3	433,9	381,1	376,0	334,3	649,6	0,19	71,53	71,64	73,23	0,19	71,70	72,10	72,81
125,0	551,0	1,1	0,0	8,7	0,0	248,4	70,5	80,8	393,2	433,5	380,1	375,3	334,1	649,3	0,19	71,50	71,63	73,17	0,18	71,64	72,11	72,80
126,0	552,0	1,0	0,0	8,5	0,0	248,1	70,6	80,5	391,2	433,0	379,1	374,4	333,8	644,6	0,19	71,47	71,61	73,15	0,19	71,59	72,09	72,79
127,0	553,0	1,0	0,0	8,4	0,0	247,3	70,1	80,8	391,1	432,5	378,7	373,8	333,8	641,6	0,19	71,37	71,56	73,13	0,19	71,52	72,05	72,75
128,0	554,0	1,0	0,0	8,4	0,0	247,4	70,3	80,5	388,8	431,9	377,1	372,7	333,5	642,1	0,19	71,32	71,52	73,08	0,19	71,47	72,04	72,75
129,0	555,0	1,0	0,0	8,3	0,0	247,3	70,3	80,6	387,6	431,3	377,2	371,9	333,7	642,7	0,19	71,27	71,51	73,04	0,19	71,44	72,03	72,68
130,0	556,0	1,0	0,0	8,3	0,0	246,9	70,2	80,3	387,2	430,7	377,1	370,7	333,9	642,3	0,19	71,25	71,46	72,99	0,19	71,40	71,99	72,64
131,0	557,0	0,9	0,0	8,3	0,0	246,2	69,6	80,2	385,7	430,0	375,4	370,6	333,8	642,9	0,19	71,28	71,47	72,97	0,19	71,39	71,99	72,60
132,0	558,0	0,9	0,0	8,3	0,0	245,8	70,0	80,2	385,3	429,4	375,6	369,2	333,8	643,4	0,19	71,23	71,45	72,95	0,19	71,34	71,99	72,56
133,0	559,0	0,9	0,0	8,3	0,0	244,7	70,0	80,2	384,3	428,7	373,5	368,9	333,6	643,2	0,19	71,22	71,43	72,93	0,19	71,34	71,94	72,53
134,0	560,0	0,9	0,0	8,2	0,0	244,6	69,8	80,3	383,0	428,0	372,4	368,3	333,2	643,9	0,19	71,26	71,44	72,91	0,19	71,33	71,94	72,52
135,0	561,0	0,9	0,0	8,2	0,0	244,6	70,0	80,2	382,3	427,4	372,9	367,2	333,3	644,9	0,19	71,19	71,43	72,87	0,19	71,30	71,93	72,50
136,0	562,0	0,9	0,0	8,2	0,0	244,9	69,8	80,0	381,1	426,7	371,2	366,8	333,0	645,2	0,19	71,14	71,39	72,82	0,19	71,25	71,91	72,45
137,0	563,0	0,8	0,0	8,2	0,0	244,6	69,8	79,9	380,1	426,0	371,5	365,7	333,0	645,4	0,19	71,18	71,40	72,79	0,19	71,27	71,89	72,41
138,0	564,0	0,8	0,0	8,2	0,0	244,4	70,0	80,2	379,8	425,3	370,8	365,3	332,8	645,5	0,19	71,11	71,38	72,76	0,19	71,22	71,86	72,38
139,0	565,0	0,8	0,0	8,1	0,0	244,3	69,9	80,3	379,0	424,6	369,8	364,4	332,7	645,4	0,19	71,01	71,35	72,73	0,19	71,18	71,83	72,37
140,0	566,0	0,8	0,0	8,1	0,0	244,6	69,6	80,5	378,4	423,9	368,7	363,8	332,6	644,7	0,19	70,95	71,33	72,67	0,19	71,15	71,80	72,32
141,0	567,0	0,8	0,0	8,0	0,0	244,4	69,2	80,2	376,9	423,3	368,0	361,4	331,9	641,3	0,19	70,89	71,29	72,66	0,19	71,11	71,79	72,29
142,0	568,0	0,8	0,0	8,0	0,0	244,5	68,1	79,8	377,0	422,4	368,4	361,8	333,3	642,5	0,19	70,92	71,30	72,58	0,19	71,10	71,77	72,21
143,0	569,0	0,8	0,0	8,0	0,0	244,0	68,4	80,0	377,5	421,9	367,5	360,7	333,0	643,1	0,19	70,86	71,27	72,49	0,19	71,06	71,77	72,14
144,0	570,0	0,7	0,0	7,9	0,0	243,8	68,6	79,9	375,7	421,1	366,0	360,2	332,4	643,9	0,19	70,77	71,21	72,45	0,19	70,99	71,73	72,12
145,0	571,0	0,7	0,0	7,8	0,0	243,7	69,0	80,1	375,6	420,3	365,6	359,5	332,4	643,7	0,19	70,68	71,20	72,43	0,19	70,91	71,72	72,08
146,0	572,0	0,7	0,0	7,8	0,0	244,0	69,3	80,1	374,6	419,6	366,1	358,4	332,5	643,4	0,19	70,85	71,20	72,42	0,18	71,01	71,73	72,04
147,0	573,0	0,7	0,0	7,9	0,0	242,7	69,7	81,3	374,3	419,0	365,7	358,0	332,1	627,0	0,19	71,09	71,24	72,38	0,19	71,14	71,75	72,00
148,0	574,0	0,7	0,0	8,0	0,0	241,1	69,9	82,5	373,7	418,2	365,1	356,9	332,6	608,1	0,19	71,38	71,32	72,40	0,19	71,30	71,79	72,03
149,0	575,0	0,7	0,0	7,8	0,0	239,0	70,2	83,3	373,0	417,6	365,2	356,2	332,2	600,2	0,19	71,67	71,38	72,42	0,18	71,52	71,89	72,03
150,0	576,0	0,7	0,0	7,8	0,0	237,4	70,4	84,2	372,0	416,9	364,7	355,3	332,2	595,8	0,19	71,94	71,46	72,46	0,19	71,74	71,97	72,09
151,0	577,0	0,7	0,0	7,7	0,0	236,2	70,9	84,7	370,9	416,2	364,4	354,9	332,2	595,2	0,19	72,23	71,57	72,47	0,19	71,99	72,07	72,12
152,0	578,0	0,6	0,0	7,8	0,0	235,6	70,7	84,2	370,2	415,6	364,2	353,7	332,4	594,3	0,19	72,49	71,66	72,52	0,19	72,19	72,16	72,16
153,0	579,0	0,6	0,0	7,7	0,0	234,4	70,7	84,1	368,7	414,9	363,6	352,6	332,6	596,4	0,19	72,71	71,75	72,54	0,18	72,37	72,25	72,21
154,0	580,0	0,6	0,0	7,7	0,0	234,0	70,4	83,7	367,9	414,3	363,5	351,9	332,5	595,8	0,19	72,84	71,83	72,60	0,19	72,53	72,33	72,28
155,0	581,0	0,6	0,0	7,7	0,0	233,9	70,7	83,0	366,7	413,6	363,1	350,9	332,7	597,0	0,19	72,91	71,86	72,61	0,19	72,62	72,36	72,30
156,0	582,0	0,6	0,0	7,6	0,0	233,5	70,7	83,1	366,2	413,0	362,5	350,0	332,7	598,3	0,19	72,89	71,90	72,65	0,19	72,66	72,41	72,35
157,0	583,0	0,6	0,0	7,5	0,0	233,5	70,9	82,5	365,2	412,3	362,1	349,5	332,6	600,2	0,19	72,82	71,93	72,69	0,19	72,69	72,43	72,40
158,0	584,0	0,6	0,0	7,7	0,0	233,4	70,9	82,6	363,9	411,6	361,3	348,4	332,7	602,4	0,19	72,77	71,96	72,70	0,19	72,68	72,43	72,43
159,0	585,0	0,5	0,0	7,6	0,0	233,7	70,8	82,1	362,8	411,0	359,7	347,4	332,6	602,5	0,19	72,75	71,99	72,74	0,19	72,68	72,46	72,46
160,0	586,0	0,5	0,0	7,5	0,0	233,6	70,6	81,3	361,6	410,3	358,8	347,0	332,2	604,5	0,19	72,59	71,97	72,72	0,19	72,61	72,45	72,46
161,0	587,0	0,5	0,0	7,6	0,0	233,3	70,5	81,5	360,9	409,6	358,9	346,5	332,1	605,1	0,19	72,47	71,96	72,75	0,19	72,54	72,43	72,49
162,0	588,0	0,5	0,0	7,5	0,0	233,6	70,4	81,6	360,5	409,0	358,7	345,6	332,3	607,1	0,19	72,46	71,95	72,79	0,19	72,54	72,41	72,50
163,0	589,0	0,5	0,0	7,6	0,0	233,3	70,6	81,0	359,1	408,3	358,0	345,0	332,2	609,6	0,19	72,40	71,96	72,79	0,19	72,48	72,40	72,54
164,0	590,0	0,5	0,0	7,8	0,0	233,9	70,5	81,2	358,4	407,6	357,2	344,3	332,0	610,2	0,19	72,36	71,94	72,83	0,18	72,46	72,38	72,53
165,0	591,0	0,5	0,0	7,7	0,0	234,1	70,5	80,8	357,5	406,9	356,9	343,6	331,9	611,5	0,19	72,24	71,94	72,82	0,19	72,39	72,37	72,57
166,0	592,0	0,4	0,0	7,8	0,0	234,6	70,4	80,4	356,9	406,1	355,1	343,3	331,4	613,3	0,19	72,15	71,94	72,84	0,19	72,35	72,37	72,57
167,0	593,0	0,4	0,0	7,5	0,0	234,4	70,4	80,2	355,5	405,4	355,3	342,9	331,1	614,6	0,19	72,06	71,91	72,83	0,19	72,27	72,35	72,56
168,0	594,0	0,4	0,0	7,3	0,0	234,2	70,5	80,2	354,5	404,7	354,8	342,1	331,1	614,0	0,19	72,09	71,91	72,82	0,19	72,24	72,33	72,55
169,0	595,0	0,4	0,0	7,4	0,0	234,6	70,1	80,0	354,6	404,0	354,1	341,4	330,9	617,2	0,19	72,08	71,89	72,83	0,19	72,24	72,30	72,56
170,0	596,0	0,4	0,0	7,5	0,0	234,7	70,1	80,3	354,0	403,3	354,1	340,6	330,9	619,6	0,19	72,04	71,88	72,81	0,19	72,19	72,26	72,55
171,0	597,0	0,4	0,0	7,5	0,0	234,7	70,4	80,1	352,8	402,5	353,4	340,0	331,0	603,3	0,19	72,01	71,86	72,82	0,19	72,18	72,23	72,58
172,0	598,0	0,4	0,0	7,9	0,0	232,5	70,4	80,8	353,6	401,8	353,4	339,4	331,2	585,2	0,19	71,97	71,87	72,81	0,19	72,15	72,23	72,55
173,0	599,0	0,3	0,0	7,5	0,0	231,1	70,6	80,0	352,1	401,1	351,4	339,2	331,2	579,5	0,19	71,95	71,84	72,84	0,19	72,13	72,22	72,58
174,0	600,0	0,3	0,0	7,3	0,0	229,2	70,4	80,3	351,6	400,2	352,0	338,3	332,0	575,9	0,19	71,92	71,84	72,83	0,19	72,10	72,21	72,53
175,0	601,0	0,3	0,0	7,3	0,0	227,7	70,1	79,7	349,8	399,3	351,2	337,8	332,6	573,8	0,19	71,87	71,82	72,82	0,19	72,06	72,20	72,55
176,0	602,0	0,3	0,0	7,2	0,0	226,4	70,1	80,0	348,6	398,3	349,9	337,6	333,6	573,2	0,19	71,81	71,80	72,81	0,19	72,03	72,19	72,54
177,0	603,0	0,3	0,0	6,7	0,0	225,6	69,9	79,9	348,5	397,2	349,2	337,5	334,4	575,3	0,19	71,75	71,77	72,81	0,19	71,96	72,18	72,53
178,0	604,0	0,3	0,0	6,5	0,0	225,0	70,2	79,9	347,0	396,1	348,8	337,2	335,6	577,1	0,19	71,69	71,77	72,79	0,19	71,92	72,16	72,51
179,0	605,0	0,3	0,0	6,6	0,0	224,4	70,3	80,0	346,6	394,9	347,8	336,6	336,4	576,4	0,19	71,71	71,77	72,76	0,19	71,89	72,14	72,49
180,0	606,0	0,2	0,0	6,5	0,0	224,1	70,2	79,8	345,7	393,6	347,4	336,2	337,2	577,2	0,19	71,73	71,75	72,76	0,19	71,91	72,13	72,47
181,0	607,0	0,2	0,0	6,5	0,0	223,7	70,2	79,6	344,8	392,3	346,7	335,2	338,2	576,1	0,19	71,74	71,76	72,75	0,19	71,89	72,14	72,46

182,0	608,0	0,2	0,0	6,4	0,0	223,4	70,5	79,8	344,2	391,0	345,8	335,3	338,7	576,6	0,19	71,79	71,75	72,74	0,19	71,90	72,10	72,45
183,0	609,0	0,2	0,0	6,5	0,0	223,3	70,2	79,5	342,8	389,6	344,1	335,0	338,7	576,9	0,19	71,74	71,73	72,74	0,19	71,87	72,09	72,43
184,0	610,0	0,2	0,0	6,5	0,0	222,7	70,4	79,4	341,4	388,3	343,5	334,5	339,3	575,8	0,19	71,70	71,70	72,72	0,19	71,83	72,08	72,43
185,0	611,0	0,2	0,0	6,5	0,0	222,5	70,3	79,1	340,8	386,9	342,6	333,8	339,9	574,8	0,19	71,67	71,70	72,70	0,19	71,81	72,08	72,42
186,0	612,0	0,2	0,0	6,4	0,0	222,1	70,0	79,1	339,4	385,6	341,4	333,7	340,2	573,9	0,19	71,65	71,69	72,67	0,19	71,78	72,06	72,41
187,0	613,0	0,2	0,0	6,5	0,0	221,3	70,2	79,1	338,9	384,3	340,0	333,3	340,6	572,7	0,19	71,55	71,67	72,65	0,19	71,73	72,06	72,39
188,0	614,0	0,1	0,0	6,5	0,0	221,3	70,1	79,2	337,9	382,9	338,7	332,8	341,2	571,8	0,19	71,44	71,65	72,63	0,19	71,65	72,03	72,36
189,0	615,0	0,1	0,0	6,4	0,0	221,2	70,1	79,0	337,1	381,6	337,2	332,4	341,7	572,4	0,19	71,35	71,60	72,60	0,18	71,58	72,01	72,33
190,0	616,0	0,1	0,0	6,4	0,0	221,0	70,1	78,9	336,3	380,3	336,5	331,9	342,2	572,7	0,19	71,25	71,59	72,56	0,19	71,51	72,00	72,29
191,0	617,0	0,1	0,0	6,3	0,0	220,6	69,8	78,7	335,1	379,1	336,1	331,1	342,6	572,3	0,19	71,24	71,55	72,57	0,19	71,48	71,97	72,27
192,0	618,0	0,1	0,0	6,4	0,0	219,9	70,0	79,1	333,8	377,8	335,7	330,7	343,0	569,4	0,19	71,24	71,55	72,53	0,19	71,47	71,96	72,28
193,0	619,0	0,1	0,0	6,2	0,0	219,3	70,3	78,8	333,6	376,5	333,8	329,9	343,5	567,8	0,19	71,30	71,54	72,50	0,19	71,46	71,94	72,24
194,0	620,0	0,1	0,0	6,2	0,0	218,9	70,1	78,8	332,7	375,4	333,2	329,2	344,2	567,1	0,19	71,29	71,54	72,48	0,18	71,46	71,93	72,21
195,0	621,0	0,1	0,0	6,2	0,0	218,3	70,3	78,8	332,9	374,1	332,5	328,7	344,9	566,2	0,19	71,38	71,54	72,48	0,19	71,49	71,93	72,20
196,0	622,0	0,1	0,0	6,3	0,0	218,1	70,4	78,9	332,4	372,9	331,5	327,9	345,2	566,3	0,19	71,44	71,52	72,47	0,19	71,50	71,90	72,20
197,0	623,0	0,1	0,0	6,3	0,0	217,8	70,3	78,7	331,8	371,8	330,8	327,2	345,9	564,0	0,19	71,39	71,52	72,46	0,19	71,50	71,90	72,20
198,0	624,0	0,1	0,0	6,3	0,0	217,7	70,1	78,8	330,6	370,6	328,7	326,8	346,3	561,4	0,19	71,39	71,50	72,44	0,19	71,47	71,89	72,18
199,0	625,0	0,0	0,0	6,3	0,0	217,3	70,1	78,6	329,6	369,4	328,2	325,9	346,6	561,1	0,19	71,33	71,48	72,43	0,19	71,45	71,88	72,16

SFBA EPA EMISSION RESULTS

Test Duration: **199** min

PRESSURE FACTOR:	DGM 1	0,97917	
	DGM 2	0,97890	
	DGM 3	1,00769	
TEMPERATURE FACTORS	DGM 1	0,99269	
	DGM 2	0,99236	
	DGM 3	0,99562	
VOLUMES SAMPLED	DGM 1	37,738	SCft
	DGM 2	36,773	Scft
	DGM 3	50,211	SCft

TOTAL TUNNEL VOLUME : 35064

SAMPLE RATIOS

Sample Train 1:	929,141
Sample Train 2:	953,506

Paticulate concentration

Sample Train 1	**0,000040**	g/dscf
Sample Train 2	**0,000038**	g/dscf
Room	**0,000000**	g/dscf

TOTAL EMISSIONS

Sample Train 1	**1,39**	g
Sample Train 2	**1,33**	g

EMISSION RATES

Sample Train 1	**0,42**	g/hr
Sample Train 2	**0,40**	g/hr

1st hour emission rate **1,30** g/hr

	Train 1	Train 2
Cs	3,975E-05	3,80712E-05

RESULTS

Average emission rate: 0,4 g/hr

Burn Rate : 1,077 Dry kg/hr

BAROMETRIC PRESSURE

Average:	30,150119	in Hg
Start:	30,150119	in Hg
End:	30,150119	in Hg

DGM CONTROLLER VALUES

DGM 1	Final:	31049,769	Cuft
	Initial:	31010,984	Cuft
DGM 2	Final:	29280,458	Cuft
	Initial:	29242,116	Cuft
DGM #3	Final:	733,540	Cuft
	Initial:	683,280	Cuft

TEMPERATURES

DGM 1	531,888	°R
DGM 2	532,062	°R

CALIBRATION FACTORS

DGM 1	1,0010
DGM 2	0,9873
DGM #3	0,9958

TUNNEL FLOW RATE: 176,199 Dscfm

PARTICULATE CATCH

Total Sample Train 1:	1,50	mg
Total Sample Train 2:	1,40	mg
Total Sample Train 1 1st hour:	1,40	mg

DEVIATION: 2,16%

Manufacturer: HEARTHSTONE
Model: GM40

Run: 5
Project #: PI 20189
Test Duration: 199 min

Note: In the "Input data", "Calc. % O_2", "Fuel Properties", and "Mass Balance" columns, [e], [d], [g], [a]. [b], [c], [h], [u], [w], [j], and [k] refer to their respective variables in Clauses

	HHV	LHV
Eff	77,89%	84,18%
Comb Eff	97,28%	97,28%
HT Eff	80,06%	86,53%
Output	16 618	kJ/h
Burn Rate	1,08	kg/h
Grams CO	146	g
Input	21 336	kJ/h
MC wet	16,69	

Ultimate CO_2
$CO_{2\text{-ult}}$ 19,64
F_0
1,062

Overall Heating Efficiency: 77,89%
Combustion Efficiency: 97,28%
Heat Transfer Efficiency: 80,06%

Heat Output: 15 764 Btu/h
Heat Input: 20 240 Btu/h
Burn Duration: 3,32 h
Burn Rate: 2,37 lb/h
Stack Temp: 278,4 Deg. F

Averages	0,24	10,07	1,37	20,26	10,07	136,80	21,29	99,3%	80,7%	#DIV/0!
INPUT DATA			Oxygen Calculation			Input Data		Combust	Heat	Net
Elapsed Time	Weight Remaining (kg)	% CO [e]	% CO_2 [d]	Excess Air EA	Total O_2	Calc. % O_2 [g]	Flue Gas (ºC)	Room Temp (ºC)	Eff %	Transfer %	Eff %
0,00	4,29	0,02	3,87	405,5%	20,68	16,81	121,2	19,6	100,9%	73,3%	73,9%
1,00	4,26	0,03	1,42	1255,3%	20,84	19,41	132,9	19,7	102,0%	42,0%	42,9%
2,00	4,22	0,00	3,80	415,9%	20,69	16,88	146,7	19,7	101,2%	68,7%	69,6%
3,00	4,17	0,00	4,69	319,1%	20,63	15,94	158,4	19,8	101,0%	70,8%	71,5%
4,00	4,13	0,00	1,27	1447,7%	20,86	19,59	169,1	19,8	104,6%	19,1%	20,0%
5,00	4,08	0,00	2,11	831,6%	20,80	18,69	150,9	20,0	102,7%	51,8%	53,2%
6,00	4,08	0,01	1,42	1266,6%	20,85	19,42	139,6	20,1	103,2%	39,4%	40,7%
7,00	4,04	0,00	4,59	327,5%	20,64	16,04	132,2	20,4	101,0%	74,3%	75,0%
8,00	4,04	0,00	4,59	328,0%	20,64	16,05	128,4	20,7	101,0%	74,8%	75,6%
9,00	3,99	0,00	5,79	239,5%	20,56	14,77	129,4	20,8	100,8%	77,6%	78,2%
10,00	3,90	0,00	11,62	69,0%	20,17	8,55	134,1	20,8	100,2%	82,9%	83,1%
11,00	3,86	0,19	13,82	40,2%	20,01	6,10	137,5	20,9	99,0%	83,6%	82,7%
12,00	3,81	0,01	11,64	68,6%	20,17	8,52	139,4	20,8	100,2%	82,6%	82,7%
13,00	3,76	0,00	11,16	76,0%	20,20	9,04	143,0	20,7	100,2%	82,1%	82,3%
14,00	3,72	0,06	14,34	36,4%	19,99	5,62	147,9	20,8	99,8%	83,3%	83,1%
15,00	3,63	0,04	14,46	35,5%	19,98	5,50	153,0	20,9	99,9%	83,0%	82,9%
16,00	3,58	0,05	14,62	33,9%	19,97	5,33	158,7	20,9	99,8%	82,8%	82,6%
17,00	3,49	0,25	16,43	17,7%	19,84	3,28	163,6	20,9	98,8%	83,1%	82,1%
18,00	3,45	0,16	15,57	24,8%	19,90	4,25	168,1	21,0	99,2%	82,7%	82,0%
19,00	3,36	0,69	16,30	15,6%	19,82	3,18	172,0	20,8	96,6%	82,5%	79,8%
20,00	3,31	0,18	16,84	15,4%	19,82	2,88	173,1	21,0	99,2%	82,8%	82,1%
21,00	3,22	0,65	16,22	16,5%	19,83	3,29	174,1	21,2	96,8%	82,5%	79,8%
22,00	3,17	0,49	15,67	21,5%	19,87	3,95	174,4	21,1	97,5%	82,3%	80,2%
23,00	3,13	0,58	15,72	20,5%	19,86	3,85	174,7	20,9	97,1%	82,2%	79,8%
24,00	3,04	0,77	15,81	18,5%	19,85	3,65	175,1	21,1	96,1%	82,2%	79,0%
25,00	2,99	0,52	16,00	18,9%	19,85	3,59	176,7	21,0	97,4%	82,3%	80,2%
26,00	2,95	0,55	16,86	12,8%	19,79	2,66	178,4	21,0	97,4%	82,5%	80,3%
27,00	2,86	0,86	17,07	9,5%	19,76	2,25	180,3	21,2	96,0%	82,4%	79,1%
28,00	2,81	0,91	17,26	8,1%	19,74	2,03	181,7	21,1	95,8%	82,4%	78,9%
29,00	2,72	0,87	17,27	8,3%	19,74	2,03	182,4	21,0	96,0%	82,4%	79,0%
30,00	2,68	1,08	17,30	6,9%	19,73	1,88	183,3	21,1	95,1%	82,3%	78,2%
31,00	2,59	1,10	17,27	6,9%	19,73	1,91	184,2	21,2	95,0%	82,2%	78,1%
32,00	2,54	1,28	17,24	6,1%	19,72	1,84	184,8	21,3	94,2%	82,1%	77,4%
33,00	2,49	1,32	17,23	5,9%	19,71	1,82	185,1	21,5	94,0%	82,1%	77,2%
34,00	2,40	1,43	17,24	5,2%	19,71	1,75	185,7	21,2	93,6%	82,0%	76,8%
35,00	2,36	1,56	17,24	4,5%	19,70	1,68	185,9	21,5	93,1%	82,0%	76,3%
36,00	2,31	1,74	17,22	3,6%	19,69	1,59	186,4	21,2	92,3%	81,9%	75,6%
37,00	2,22	1,88	17,24	2,7%	19,68	1,50	186,8	21,4	91,8%	81,9%	75,1%
38,00	2,18	2,11	17,22	1,6%	19,66	1,39	186,8	21,3	90,9%	81,8%	74,3%
39,00	2,09	2,29	17,23	0,6%	19,65	1,28	187,2	21,4	90,2%	81,7%	73,7%
40,00	2,04	2,55	17,17	-0,4%	19,64	1,19	187,1	21,3	89,2%	81,6%	72,8%
41,00	1,95	2,68	17,16	-1,0%	19,63	1,13	187,0	21,4	88,7%	81,6%	72,4%
42,00	1,91	2,88	17,04	-1,4%	19,62	1,14	186,8	21,4	88,0%	81,5%	71,7%
43,00	1,86	2,82	17,04	-1,1%	19,63	1,18	186,0	21,4	88,2%	81,6%	71,9%
44,00	1,77	2,64	16,99	0,1%	19,64	1,33	185,8	21,6	88,8%	81,6%	72,5%
45,00	1,72	2,15	17,09	2,1%	19,67	1,51	185,7	21,8	90,7%	81,8%	74,2%
46,00	1,68	1,91	17,11	3,3%	19,68	1,62	185,0	21,6	91,6%	81,9%	75,0%
47,00	1,63	1,64	17,12	4,7%	19,70	1,76	184,9	21,5	92,7%	82,0%	76,0%
48,00	1,59	1,40	17,09	6,2%	19,72	1,93	184,5	21,5	93,7%	82,1%	76,9%
49,00	1,54	1,09	17,08	8,2%	19,74	2,12	184,3	21,7	95,0%	82,2%	78,1%
50,00	1,50	0,90	17,01	9,7%	19,76	2,30	184,1	21,8	95,8%	82,2%	78,7%
51,00	1,45	0,72	16,93	11,3%	19,77	2,49	183,8	21,7	96,6%	82,2%	79,4%
52,00	1,41	0,61	16,75	13,1%	19,79	2,74	182,7	21,8	97,1%	82,3%	79,9%
53,00	1,36	0,36	16,43	17,0%	19,83	3,22	181,3	21,6	98,2%	82,3%	80,8%
54,00	1,32	0,21	16,10	20,4%	19,86	3,65	180,2	21,7	99,0%	82,3%	81,4%
55,00	1,27	0,09	15,90	22,8%	19,88	3,94	178,7	21,6	99,6%	82,3%	82,0%
56,00	1,27	0,05	15,79	24,0%	19,89	4,08	177,1	21,7	99,8%	82,4%	82,2%
57,00	1,22	0,01	15,34	27,9%	19,93	4,58	175,4	21,6	100,0%	82,3%	82,3%
58,00	1,18	0,00	14,62	34,4%	19,97	5,36	173,6	21,8	100,1%	82,1%	82,2%
59,00	1,18	0,00	13,73	43,1%	20,03	6,31	171,4	21,9	100,1%	81,8%	81,9%
60,00	1,13	0,00	13,13	49,6%	20,07	6,94	169,3	21,6	100,2%	81,6%	81,8%
61,00	1,13	0,00	12,72	54,4%	20,10	7,38	167,1	21,8	100,2%	81,5%	81,7%
62,00	1,09	0,00	12,49	57,2%	20,12	7,62	164,7	21,5	100,2%	81,5%	81,7%
63,00	1,09	0,00	11,97	64,2%	20,15	8,18	162,7	21,8	100,2%	81,4%	81,6%
64,00	1,04	0,00	11,44	71,7%	20,18	8,74	160,6	21,6	100,2%	81,2%	81,4%
65,00	1,04	0,00	11,43	71,9%	20,19	8,76	158,4	21,6	100,2%	81,3%	81,5%
66,00	1,00	0,00	11,42	72,0%	20,19	8,76	156,9	21,7	100,2%	81,4%	81,6%
67,00	1,00	0,00	11,01	78,5%	20,21	9,21	155,0	21,5	100,3%	81,3%	81,5%
68,00	1,00	0,00	10,78	82,3%	20,23	9,45	153,5	21,6	100,3%	81,2%	81,4%
69,00	0,95	0,00	10,48	87,5%	20,25	9,77	152,1	21,7	100,3%	81,1%	81,3%
70,00	0,95	0,00	10,30	90,7%	20,26	9,96	150,9	21,7	100,3%	81,1%	81,3%
71,00	0,95	0,00	10,33	90,2%	20,26	9,93	149,7	21,5	100,3%	81,2%	81,4%
72,00	0,91	0,00	10,36	89,5%	20,26	9,89	148,5	21,5	100,3%	81,3%	81,5%
73,00	0,91	0,00	10,27	91,3%	20,26	10,00	147,2	21,7	100,3%	81,3%	81,5%
74,00	0,91	0,00	10,03	95,8%	20,28	10,25	145,8	21,4	100,3%	81,2%	81,4%
75,00	0,91	0,00	9,44	108,1%	20,32	10,88	144,6	21,3	100,3%	80,8%	81,1%
76,00	0,91	0,00	9,04	117,3%	20,34	11,30	143,4	21,4	100,4%	80,6%	80,9%
77,00	0,86	0,00	8,93	120,0%	20,35	11,42	142,6	21,5	100,4%	80,5%	80,8%
78,00	0,86	0,00	8,76	124,2%	20,36	11,60	141,4	21,7	100,4%	80,5%	80,8%
79,00	0,86	0,00	8,74	124,6%	20,36	11,62	140,3	21,7	100,4%	80,6%	80,9%
80,00	0,86	0,00	8,80	123,3%	20,36	11,56	139,4	21,8	100,4%	80,7%	81,0%
81,00	0,86	0,00	8,86	121,6%	20,35	11,49	138,4	21,8	100,4%	80,8%	81,1%
82,00	0,82	0,00	8,84	122,1%	20,36	11,51	137,3	21,8	100,4%	80,9%	81,2%
83,00	0,82	0,00	8,98	118,8%	20,35	11,37	136,4	22,1	100,4%	81,1%	81,4%
84,00	0,82	0,00	9,08	116,4%	20,34	11,26	135,7	21,9	100,3%	81,2%	81,5%
85,00	0,82	0,00	9,13	115,2%	20,34	11,21	135,3	22,2	100,3%	81,3%	81,6%
86,00	0,82	0,00	9,23	112,9%	20,33	11,10	134,4	21,8	100,3%	81,4%	81,7%
87,00	0,77	0,00	9,25	112,2%	20,33	11,07	133,7	22,0	100,3%	81,5%	81,8%
88,00	0,77	0,00	9,27	111,8%	20,33	11,05	133,3	22,0	100,3%	81,6%	81,9%
89,00	0,77	0,00	9,17	114,1%	20,33	11,16	132,4	21,9	100,3%	81,6%	81,8%
90,00	0,77	0,00	9,27	111,8%	20,33	11,05	132,1	22,0	100,3%	81,7%	81,9%
91,00	0,77	0,00	9,12	115,2%	20,34	11,21	131,5	21,9	100,3%	81,6%	81,9%
92,00	0,73	0,00	9,08	116,4%	20,34	11,26	130,9	21,7	100,3%	81,6%	81,9%

93,00	0,73	0,00	9,11	115,6%	20,34	11,23	130,0	21,8	100,3%	81,7%	82,0%
94,00	0,73	0,00	9,01	117,9%	20,34	11,33	129,3	21,8	100,3%	81,7%	82,0%
95,00	0,73	0,00	9,14	114,8%	20,34	11,19	128,8	21,7	100,3%	81,8%	82,1%
96,00	0,73	0,00	9,09	116,0%	20,34	11,25	128,1	21,9	100,3%	81,8%	82,1%
97,00	0,68	0,00	8,91	120,3%	20,35	11,44	127,2	21,8	100,4%	81,8%	82,1%
98,00	0,68	0,00	9,11	115,6%	20,34	11,23	126,7	21,8	100,3%	81,9%	82,2%
99,00	0,68	0,00	9,11	115,6%	20,34	11,23	126,3	21,8	100,3%	82,0%	82,3%
100,00	0,68	0,00	9,08	116,4%	20,34	11,26	125,8	21,8	100,3%	82,0%	82,3%
101,00	0,68	0,00	9,14	114,8%	20,34	11,19	125,3	21,8	100,3%	82,1%	82,4%
102,00	0,64	0,00	9,08	116,4%	20,34	11,26	124,9	21,6	100,3%	82,0%	82,3%
103,00	0,64	0,00	9,12	115,2%	20,34	11,21	124,6	21,6	100,3%	82,1%	82,4%
104,00	0,64	0,00	9,05	117,1%	20,34	11,30	124,2	21,7	100,3%	82,1%	82,4%
105,00	0,64	0,00	9,09	115,9%	20,34	11,24	123,9	21,6	100,3%	82,1%	82,4%
106,00	0,64	0,00	9,06	116,7%	20,34	11,28	123,5	21,7	100,3%	82,1%	82,4%
107,00	0,64	0,00	9,03	117,6%	20,34	11,32	123,5	20,4	100,3%	82,0%	82,3%
108,00	0,59	0,00	9,03	117,5%	20,34	11,32	123,4	21,1	100,3%	82,1%	82,4%
109,00	0,59	0,00	9,03	117,6%	20,34	11,32	123,1	20,9	100,3%	82,1%	82,4%
110,00	0,59	0,00	9,03	117,6%	20,34	11,32	122,8	21,2	100,4%	82,1%	82,4%
111,00	0,59	0,00	8,98	118,7%	20,35	11,37	122,6	21,2	100,4%	82,1%	82,4%
112,00	0,59	0,00	8,95	119,5%	20,35	11,40	122,2	21,2	100,4%	82,1%	82,4%
113,00	0,59	0,00	8,94	119,6%	20,35	11,40	122,0	21,2	100,4%	82,1%	82,4%
114,00	0,54	0,00	8,88	121,2%	20,35	11,47	121,9	21,2	100,4%	82,1%	82,4%
115,00	0,54	0,00	8,96	119,2%	20,35	11,39	121,8	21,4	100,4%	82,2%	82,5%
116,00	0,54	0,00	8,86	121,6%	20,35	11,49	121,9	21,4	100,4%	82,1%	82,4%
117,00	0,54	0,00	8,86	121,6%	20,35	11,49	121,5	21,5	100,4%	82,1%	82,4%
118,00	0,54	0,00	8,86	121,6%	20,35	11,49	121,3	21,3	100,4%	82,1%	82,4%
119,00	0,50	0,00	8,83	122,4%	20,36	11,53	121,1	21,3	100,4%	82,1%	82,4%
120,00	0,50	0,00	8,76	124,1%	20,36	11,60	120,9	21,5	100,4%	82,1%	82,4%
121,00	0,50	0,00	8,75	124,5%	20,36	11,61	120,8	21,4	100,4%	82,1%	82,4%
122,00	0,50	0,00	8,75	124,5%	20,36	11,61	120,6	21,5	100,4%	82,1%	82,4%
123,00	0,50	0,00	8,73	124,9%	20,36	11,63	120,6	21,4	100,4%	82,1%	82,4%
124,00	0,50	0,00	8,70	125,8%	20,37	11,67	120,4	21,4	100,4%	82,1%	82,4%
125,00	0,50	0,00	8,67	126,6%	20,37	11,70	120,2	21,4	100,4%	82,1%	82,4%
126,00	0,45	0,00	8,50	131,1%	20,38	11,88	120,0	21,4	100,4%	82,0%	82,3%
127,00	0,45	0,00	8,37	134,7%	20,39	12,02	119,6	21,2	100,4%	81,9%	82,2%
128,00	0,45	0,00	8,35	135,1%	20,39	12,04	119,7	21,3	100,4%	81,9%	82,2%
129,00	0,45	0,00	8,32	136,1%	20,39	12,07	119,6	21,3	100,4%	81,8%	82,2%
130,00	0,45	0,00	8,32	136,1%	20,39	12,07	119,4	21,2	100,4%	81,9%	82,2%
131,00	0,41	0,00	8,27	137,5%	20,39	12,12	119,0	20,9	100,4%	81,8%	82,1%
132,00	0,41	0,00	8,27	137,5%	20,39	12,12	118,8	21,1	100,4%	81,9%	82,2%
133,00	0,41	0,00	8,27	137,5%	20,39	12,12	118,2	21,1	100,4%	81,9%	82,2%
134,00	0,41	0,00	8,24	138,4%	20,40	12,16	118,1	21,0	100,4%	81,9%	82,2%
135,00	0,41	0,00	8,22	138,9%	20,40	12,18	118,1	21,1	100,4%	81,9%	82,2%
136,00	0,41	0,00	8,20	139,4%	20,40	12,19	118,3	21,0	100,4%	81,8%	82,2%
137,00	0,36	0,00	8,17	140,4%	20,40	12,23	118,1	21,0	100,4%	81,8%	82,1%
138,00	0,36	0,00	8,17	140,3%	20,40	12,23	118,0	21,1	100,4%	81,8%	82,2%
139,00	0,36	0,00	8,10	142,3%	20,40	12,30	117,9	21,1	100,4%	81,8%	82,1%
140,00	0,36	0,00	8,07	143,2%	20,41	12,33	118,1	20,9	100,4%	81,7%	82,1%
141,00	0,36	0,00	8,02	144,8%	20,41	12,39	118,0	20,7	100,4%	81,7%	82,0%
142,00	0,36	0,00	8,01	145,3%	20,41	12,40	118,0	20,0	100,4%	81,6%	81,9%
143,00	0,36	0,00	7,96	146,8%	20,41	12,46	117,8	20,2	100,4%	81,6%	81,9%
144,00	0,32	0,00	7,91	148,3%	20,42	12,51	117,7	20,3	100,4%	81,6%	81,9%
145,00	0,32	0,00	7,82	151,1%	20,42	12,60	117,6	20,6	100,4%	81,5%	81,9%
146,00	0,32	0,00	7,82	151,0%	20,42	12,60	117,8	20,7	100,4%	81,5%	81,9%
147,00	0,32	0,00	7,91	148,3%	20,42	12,51	117,1	20,9	100,4%	81,7%	82,0%
148,00	0,32	0,00	8,00	145,4%	20,41	12,41	116,2	21,1	100,4%	81,8%	82,2%
149,00	0,32	0,00	7,84	150,5%	20,42	12,58	115,0	21,2	100,5%	81,8%	82,2%
150,00	0,32	0,00	7,76	153,3%	20,43	12,67	114,1	21,4	100,5%	81,8%	82,2%
151,00	0,32	0,00	7,72	154,3%	20,43	12,71	113,5	21,6	100,5%	81,9%	82,3%
152,00	0,27	0,00	7,77	152,7%	20,43	12,65	113,1	21,5	100,5%	81,9%	82,3%
153,00	0,27	0,00	7,71	154,8%	20,43	12,72	112,5	21,5	100,5%	81,9%	82,3%
154,00	0,27	0,00	7,72	154,3%	20,43	12,71	112,2	21,4	100,5%	82,0%	82,3%
155,00	0,27	0,00	7,67	155,9%	20,43	12,76	112,2	21,5	100,5%	81,9%	82,3%
156,00	0,27	0,00	7,61	158,1%	20,44	12,83	111,9	21,5	100,5%	81,9%	82,3%
157,00	0,27	0,00	7,54	160,3%	20,44	12,90	112,0	21,6	100,5%	81,8%	82,2%
158,00	0,27	0,00	7,67	155,9%	20,43	12,76	111,9	21,6	100,5%	82,0%	82,3%
159,00	0,23	0,00	7,62	157,6%	20,44	12,81	112,1	21,5	100,5%	81,9%	82,3%
160,00	0,23	0,00	7,51	161,5%	20,44	12,93	112,0	21,4	100,5%	81,8%	82,2%
161,00	0,23	0,00	7,62	157,5%	20,44	12,81	111,9	21,4	100,5%	81,9%	82,3%
162,00	0,23	0,00	7,48	162,7%	20,45	12,97	112,0	21,3	100,5%	81,7%	82,1%
163,00	0,23	0,00	7,61	158,1%	20,44	12,83	111,8	21,4	100,5%	81,9%	82,3%
164,00	0,23	0,00	7,76	153,2%	20,43	12,67	112,1	21,4	100,4%	82,0%	82,4%
165,00	0,23	0,00	7,66	156,4%	20,43	12,78	112,3	21,4	100,5%	81,9%	82,3%
166,00	0,18	0,00	7,76	153,1%	20,43	12,67	112,5	21,3	100,4%	82,0%	82,3%
167,00	0,18	0,00	7,49	162,1%	20,45	12,95	112,5	21,3	100,5%	81,7%	82,1%
168,00	0,18	0,00	7,34	167,3%	20,45	13,11	112,3	21,4	100,5%	81,6%	82,0%
169,00	0,18	0,00	7,38	166,1%	20,45	13,07	112,6	21,2	100,5%	81,6%	82,0%
170,00	0,18	0,00	7,48	162,6%	20,45	12,97	112,6	21,2	100,5%	81,7%	82,1%
171,00	0,18	0,00	7,49	162,0%	20,44	12,95	112,6	21,3	100,5%	81,7%	82,1%
172,00	0,18	0,00	7,89	149,0%	20,42	12,53	111,4	21,3	100,5%	82,2%	82,6%
173,00	0,14	0,00	7,49	162,1%	20,45	12,95	110,6	21,4	100,5%	81,9%	82,3%
174,00	0,14	0,00	7,30	169,2%	20,46	13,16	109,5	21,3	100,5%	81,8%	82,2%
175,00	0,14	0,00	7,28	169,9%	20,46	13,18	108,7	21,2	100,5%	81,8%	82,3%
176,00	0,14	0,00	7,25	171,1%	20,46	13,22	108,0	21,1	100,5%	81,9%	82,3%
177,00	0,14	0,00	6,72	192,3%	20,50	13,78	107,6	21,0	100,6%	81,4%	81,8%
178,00	0,14	0,00	6,50	202,0%	20,51	14,01	107,2	21,2	100,6%	81,1%	81,7%
179,00	0,14	0,00	6,55	199,7%	20,51	13,95	106,9	21,3	100,6%	81,2%	81,7%
180,00	0,09	0,00	6,52	201,2%	20,51	13,99	106,7	21,2	100,6%	81,2%	81,7%
181,00	0,09	0,00	6,45	204,3%	20,51	14,06	106,5	21,2	100,6%	81,2%	81,7%
182,00	0,09	0,00	6,37	208,2%	20,52	14,15	106,3	21,4	100,6%	81,1%	81,6%
183,00	0,09	0,00	6,50	201,9%	20,51	14,01	106,3	21,2	100,6%	81,2%	81,7%
184,00	0,09	0,00	6,45	204,3%	20,51	14,06	105,9	21,3	100,6%	81,2%	81,7%
185,00	0,09	0,00	6,45	204,3%	20,51	14,06	105,8	21,3	100,6%	81,2%	81,8%
186,00	0,09	0,00	6,44	205,1%	20,51	14,08	105,6	21,1	100,6%	81,2%	81,7%
187,00	0,09	0,00	6,52	201,3%	20,51	13,99	105,2	21,2	100,6%	81,4%	81,9%
188,00	0,05	0,00	6,45	204,2%	20,51	14,06	105,1	21,2	100,6%	81,3%	81,8%
189,00	0,05	0,00	6,42	205,9%	20,52	14,09	105,1	21,1	100,6%	81,3%	81,8%
190,00	0,05	0,00	6,37	208,2%	20,52	14,15	105,0	21,2	100,6%	81,2%	81,7%
191,00	0,05	0,00	6,32	210,6%	20,52	14,20	104,8	21,0	100,6%	81,2%	81,7%
192,00	0,05	0,00	6,35	209,0%	20,52	14,17	104,4	21,1	100,6%	81,3%	81,8%
193,00	0,05	0,00	6,21	216,4%	20,53	14,32	104,1	21,3	100,7%	81,1%	81,7%
194,00	0,05	0,00	6,22	215,5%	20,53	14,30	103,8	21,2	100,6%	81,2%	81,7%
195,00	0,05	0,00	6,21	216,4%	20,53	14,32	103,5	21,3	100,7%	81,2%	81,7%
196,00	0,05	0,00	6,29	212,2%	20,52	14,23	103,4	21,3	100,6%	81,3%	81,8%
197,00	0,05	0,00	6,29	212,3%	20,52	14,23	103,2	21,3	100,6%	81,3%	#DIV/0!
198,00	0,05	0,00	6,31	211,4%	20,52	14,22	103,1	21,1	100,6%	81,3%	81,8%
199,00	0,00	0,00	6,29	212,2%	20,52	14,23	103,0	21,2	100,6%	81,3%	81,9%

POLYTESTS
TESTING THROUGH YOUR REALITY

Date: 2019-03-26 Manufacturer: Hearthstone Model: GM 40
Project #: PT 20189 Run: 6 Tech: MM Reviewer: DP

- kindling 2.7LBS start fire
- by pass open
- Fan low
- At 0.8LBS insert preload
- At 10.8LBS close Door
At 10.00LBS close bypass
At 1.9LBS insert second preload
At 3.4LBS close air inlet ~~(Drill bit 1/16)~~ mm
At 2.3LBS - open bypass
- open Door
- crush coal bed
- close Door
- close bypass
- After 2 min - open bypass
- open Door
- open air inlet
- insert load
- close Door
- close bypass
after 5 min close air inlet ~~(Drill bit 1/16)~~ mm

TEST LOAD CONFIGURATION

POLYTESTS
TESTING THROUGH YOUR REALITY

PRE / POST CHECKS

Date: 2019-03-26 Manufacturer: Hearthstone Model: GM 40

Project #: PI 20189 Run: 6 Tech: MM Reviewer: [illegible]

	Equipment #	Time	12%	22%
Moisture Meter Calibration Check:	EM 191	7100	ok	ok

Facility Conditions:

	Pre-Test	Post-Test
Air Velocity from less than 2 feet	0 (max50 Fpm)	0 (max50 Fpm)
Smoke Capture Check (tunnel velocity)	ok	NA
Picture	4 sides ok	ok

Wood Heater Conditions:

Date Wood Heater Stack Cleaned	2019-03-18	
Date Dilution Tunnel Cleaned	2019-03-18	
Induced Draft Check (max 0.005 H2O)	ok	
Traverse before ignition	ok	
Flow Rate 140 cfm ±10%		ok

Temperature System:

Ambient (65°-90°F)	ok °F
Wood Heater Surface (±125°F)	ok °F

Proportional Checks:

Thermocouple check	ok
Pitot Clean	ok
Pitot verification	ok

Sampling Train ID Numbers:

	Train 1st hour	Train 1	Train 2
Probe	06	18	33
Filter Front	74	76	78
Filter Back	75	77	79
Filter Thermocouple	11	11	12
Filter (<90°F)	ok	ok	ok

POLYTESTS
TESTING THROUGH YOUR REALITY

SAMPLING EQUIPMENT CHECK OUT

Date: 2019-03-26 Manufacturer: Harthstone Model: GM 40

Project #: pT 20189 Run: 6 Tech: MM Reviewer: DP

Leakage Checks Tunnel Samplers

	System 1st hour		System 1		System 2	
Unplugged Flow Rate = .25cfm	Pre-Test ASTM (-15) CSA B415 (-5)	Post-Test (max test)	Pre-Test ASTM (-15) CSA B415 (-5)	Post-Test (Max test)	Pre-Test ASTM (-15) CSA B415 (-5)	Post-Test (Max test)
Vacuum (inches Hg.)	-15	-15	-15	-15	-15	-15
Final 1minute DGM (Liter)	879234 10	880496.06	879234 31	880496.19	829132.22	830369.62
Initial 1minute DGM (Liter)	879234.00	880496.01	879234.30	880496.15	829132.22	830369.59
Change © (Liter)	0.10	0.05	0.01	0.04	∅	0.03
Allowable leakage .04 x Sample rate or 0.28Lpm CSA B415 (0.56)						
Check OK	Ok	Ok	Ok	Ok	Ok	Ok

Leakage Checks Flue Gas Sampler

Plugged Probe	Pre Test	Post Test
Vacuum (inches Hg.)	-5	-5
Rotometer Reading (mml/min.)	0	0
Flow Rate (lpm)	1.5	1.5
Allowable (.02 x Sample Rate)	30	30
Check OK	Ok	Ok

Leakage Checks Pitot

Plugged Probe	Pre Test 3 H2o static	Pre Test 0.4-0.5 H2o velocity	Post Test 3 H2o Static	Post Test 0.4-0.5 H2o velocity
Vacuum (inches Hg.)	3	.4	3	.5
Check OK (no change after 15 sec.)	Ok	Ok	Ok	Ok

POLYTESTS
TESTING THROUGH YOUR REALITY

PRE-TEST SCALE AUDIT

Date: 2019-03-26 Manufacturer: Hearthstone Model: Gm 40

Project #: PT 2089 Run: 6 Tech: MR Reviewer: DR

Scale Type	Audit		Measured Weight
	Equipment #	Weight	
Platform	Em 090	44 lbs, Class F	44 lbs
Wood	Em 090	44 lbs, Class F	44 lbs
Analytical	Em 128	100 mg, Class S	100 mg
Analytical	Em 129	200 g, Class S	200 g

LIMITS OF WEIGHT RANGES

ANALYTICAL SCALE: ..... 50%-150% of dry filter weight, ± 0.1 mg
PLATFORM SCALE .....20%-80% of ideal test load weight, ± 0.1 lbs or 1%
WOOD SCALE .....20%-80% of ideal test load weight, ± 0.01 lbs or 1%

Date: 2019-03-26 Manufacturer: Hearthstone Model: GM 40

Project #: PT 2189 Run: 6 Tech: MM Reviewer: DP

FOR TUNNELS < 12 in

Barometric pressure (P_{bar}) 102.8 (KPa.) Static pressure (P_q) 0.34 (inches w.c.)
Inside diameter: Port A _____ Port B ____.
Tunnel cross sectional area: .1963Ft^2
Pitot tube type: Standard

Traverse Point	Position (inches)			Velocity Head Δ_p (inches H_2O)	Tunnel Temperature (°F)
	6 po	7 po	8 po		
A- Centroid	3.00	3.50	4	0061	71.36
B - Centroid	3.00	3.50	4	0.060	71.34
A-1	0.40	0.50	0.50	~~0058~~ 0048 MM	71.34
A-2	1.50	1.75	2	0051	71.29
A-3	4.50	5.25	6	0056	71.32
A-4	5.60	6.5	7.5	0048	71.31
B-1	0.40	0.50	0.50	0.047	71.38
B-2	1.50	1.75	2	0055	71.39
B-3	4.50	5.25	6	0049	71.43
B-4	5.60	6.5	7.5	0.050	71.44
				AVERAGE	

$$v_s = K_p C_p (\sqrt{\Delta p})_{avg} \sqrt{\frac{(T_s)_{avg}}{P_s M_s}}$$

Where,
C_p = pitot tube coefficient, dimension less = 0.99 for standard pitot.
Δ_p = manometer reading (inches H_2O)
T_s = average absolute dilution tunnel temperature (°F + 460)
P_s = absolute dilution tunnel gas pressure or $P_{bar} + P_{qg}$
P_q = static pressure $\frac{\text{in. } H_2O}{\{\ 13.6\ \}}$
M_s = 28.56, wet molecular weight of stack gas (alternatively, it may be measured)
K_p = 85.49 pitot tube constant, (conversion factor for English units)

$_\Delta_p$avg. = average of the square roots of the velocity heads (Δ_p) measured at each traverse point.

POLYTESTS
TESTING THROUGH YOUR REALITY

CONTINUOUS ANALYZERS

Date: 2017-03-26 Manufacturer: Heath stone Model: GA 40

Project #: PI 20187 Run: 6 Tech: MM Reviewer: SD

Pre-Test (Adjust and Record)

	ZERO		SPAN		CAL. (Record Only)	
CO	0	0	2984	3000	1008	1000
Tolerance CO		+/- 0.02		+/- 0.15		+/- 0.05
CO_2	0	0	17 95	18 00	977	1000
Tolerance CO2		+/- 0.02		+/- 0.5		+/- 0.5
O_2 informative CSA B415 calculated value	na	na	na	na	na	na
	Actual	Should Be	Actual	Should Be	Actual	Should Be

Post Test (Record Only)

	Zero	Span	Cal.	Zero Drift	Limit	Span Drift	Limit	Cal. Drift	Limit	OK?	Not OK*
CO	0	2991	1002	0	0.02	0007	0.15	0006	0.05	✓	
CO_2	0	1783	984	0	0.02	012	0.5	002	0.5	✓	

POLYTESTS
TESTING THROUGH YOUR REALITY

TEST DATA LOG

Date: 2019.03.26 Manufacturer: Hearthstone Model: 6M 40

Project #: pJ 2189 Run: 6 Tech: M M Reviewer: M

RAW DRY GAS METER READINGS

	System 1	System 2	Blanck
Final (Liter)	880495.21	830368.58	791.42
Initial (Liter)	879234.83	829133.05	733.55

AMBIENT CONDITIONS

	Before	After
Barometer (kPa):	102.8	102.6
Dry Bulb (F):	75.92	75.74
Humidity (%):	17.6	16.7

Flow Meter

	Start	End
Flow meter reading	N.A	N.A

Flow Meter Verification

	Before	After
Flow meter Check (liters)	N.A	N.A
Scale Weight (Kg)	N.A	N.A

POLYTESTS
TESTING THROUGH YOUR REALITY

FUEL DATA

Date: 2019-03-26 Manufacturer: Hearthstone Model: GM 40

Project #: PI 20187 Run: 6 Tech: [illegible] Reviewer: DP

FUEL DESCRIPTION:

Type of wood:

PRE-TEST LOAD

Piece Size	Weight		Meter Moisture Content (% dry)*				
1 1/2 x 3 1/2 x 8 in.	0.746	lbs.	196	193	198	199	198
1 1/2 x 3 1/2 x 8 in.	0.710	lbs.	190	193	192	195	195
1 1/2 x 3 1/2 x 8 in.	0.716	lbs.	191	198	196	197	198
1 1/2 x 3 1/2 x 8 in.	0.726	lbs.	193	198	199	196	193
1 1/2 x 3 1/2 x 8 in.	0.732	lbs.	192	192	193	193	198
1 1/2 x 3 1/2 x 8 in.	0.738	lbs.	198	196	193	199	196
1 1/2 x 3 1/2 x 8 in.	0.706	lbs.	198	197	197	197	196
1 1/2 x 3 1/2 x 8 in.	0.716	lbs.	201	199	198	199	196
1 1/2 x 3 1/2 x 8 in.	0.724	lbs.	197	198	193	197	193
1 1/2 x 3 1/2 x 8 in.	0.702	lbs.	200	204	206	206	208
1 1/2 x 3 1/2 x 8 in.	0.784	lbs.	201	196	193	198	196
1 1/2 x 3 1/4 x 8 in.	0.726	lbs.	194	198	194	195	196
1 1/2 x 3 1/2 x 8 in.	0.720	lbs.	196	199	193	193	198
1 1/2 x 3 1/4 x 8 in.	0.746	lbs.	201	206	203	208	209
x x in.		lbs.					
x x in.		lbs.					
x x in.		lbs.					
x x in.		lbs.					
x x in.		lbs.					
x x in.		lbs.					
x x in.		lbs.					
x x in.		lbs.					
x x in.		lbs.					

TEST LOAD WEIGHT: 10,23 lbs

POLYTESTS
TESTING THROUGH YOUR REALITY

FUEL DATA

Date: 2019-03-26 Manufacturer: Hearthstone Model: GM 40

Project #: PT 20189 Run: 6 Tech: M M Reviewer: DP

FUEL DESCRIPTION:

Type of wood:

PRE-TEST LOAD

Piece Size	Weight		Meter Moisture Content (% dry)*				
1 1/2 x 3 1/2 x 8 in.	0.746	lbs.	194	198	194	198	199
1 1/2 x 3 1/2 x 8 in.	0.716	lbs.	20°	20°	206	199	197
1 1/2 x 3 1/2 x 8 in.	0.828	lbs.	197	191	192	192	192
1 1/2 x 3 1/2 x 8 in.	0.842	lbs.	204	202	200	200	196
1 1/2 x 3 1/2 x 8 in.	0.818	lbs.	203	202	203	208	203
1 1/2 x 3 1/2 x 8 in.	0.816	lbs.	199	193	197	196	195
1 1/2 x 3 1/2 x 8 in.	0.826	lbs.	200	203	208	207	203
1 1/2 x 3 1/2 x 8 in.	0.816	lbs.	205	203	209	206	204
1 1/2 x 3 1/2 x 8 in.	0.814	lbs.	196	193	198	193	195
1 1/2 x 3 1/2 x 8 in.	0.860	lbs.	200	200	197	192	193
1 1/2 x 3 1/2 x 8 in.	0.798	lbs.	206	208	207	207	207
1 1/2 x 3 1/2 x 8 in.	0.808	lbs.	191	190	192	192	195
1 1/2 x 3 1/2 x 8 in.	0.812	lbs.	196	192	193	193	194
1 1/2 x 3 1/2 x 8 in.	0.802	lbs.	200	203	203	206	208
x x in.		lbs.					
x x in.		lbs.					
x x in.		lbs.					
x x in.		lbs.					
x x in.		lbs.					
x x in.		lbs.					
x x in.		lbs.					
x x in.		lbs.					
x x in.		lbs.					

TEST LOAD WEIGHT: 11.30 lbs

POLYTESTS
TESTING THROUGH YOUR REALITY

FUEL DATA

Date: 2019-03-26 Manufacturer: Hearthstone Model: GM 40

Project #: PT 2189 Run: 6 Tech: MM Reviewer: NP

FUEL DESCRIPTION:

Type of wood :

TEST LOAD

Piece Size	Weight	Meter Moisture Content (% dry)*				
1 1/2 x 3 1/2 x 13 1/2 in.	1572 lbs.	193	196	197	198	199
1 1/2 x 3 1/2 x 13 1/2 in.	1614 lbs.	210	214	213	209	208
1 1/2 x 3 1/2 x 13 1/2 in.	1528 lbs.	205	208	209	206	204
1 1/2 x 3 1/2 x 13 1/2 in.	1282 lbs.	194	190	194	193	192
1 1/2 x 3 1/2 x 13 1/2 in.	1412 lbs.	205	197	199	200	201
1 1/2 3/4 x 3 1/2 x 5 in.	0128 lbs.			190		
1 1/2 3/4 x 3 1/2 x 5 in.	0118 lbs.			191		
1 1/2 x 3/4 x 5 in.	0090 lbs.			194		
1 1/2 x 3/4 x 5 in.	0104 lbs.			192		
1 1/2 x 3/4 x 5 in.	0130 lbs.			193		
1 1/2 x 3/4 x 5 in.	0126 lbs.			200		
1 1/2 x 3/4 x 5 in.	0098 lbs.			201		
1 1/2 x 3/4 x 5 in.	0132 lbs.			196		
1 1/2 x 3/4 x 5 in.	0104 lbs.			194		
1 1/2 x 3/4 x 5 in.	0138 lbs.			193		
1 1/2 x 3/4 x 5 in.	0098 lbs.			196		
1 1/2 x 3/4 x 5 in.	0106 lbs.			197		
1 1/2 x 3/4 x 5 in.	0130 lbs.			198		
1 1/2 x 3/4 x 5 in.	0124 lbs.			196		
1 1/2 x 3/4 x 5 in.	0100 lbs.			194		
1 1/2 x 3/4 x 5 in.	0140 lbs.			194		
x x in.	lbs.					
x x in.	lbs.					
x x in.	lbs.					
x x in.	lbs.					
x x in.	lbs.					
x x in.	lbs.					

TEST LOAD WEIGHT: ~~9,36~~ 9,29 lbs Min 20%: 1,86 Max 25%: 2,32

POLYTESTS
TESTING THROUGH YOUR REALITY

DILUTION TUNNEL PARTICULATE SAMPLER DATA

Date: 2019-03-25 Manufacturer: Hearthstone Model: GM 40

Project #: PJ 20189 Run: G Tech: MM Reviewer: BP

Pre-test Weight Record		SYSTEM 1 – 1st hour				SYSTEM 1				
		Probe & Housing Number	Front Filter Number	Back Filter Number	gaskets	Probe & Housing Number	Front Filter Number	Back Filter Number	gaskets	Blanck
Date	Time	06	74	75	27	18	76	77	32	80
2019-03-25	17:00	61,3741	0,1325	0,1268	34,2147	108,9476	0,1263	0,1311	35,2531	0,1263
2019-03-26	8:00	61,3742	0,1326	0,1268	34,2148	108,9475	0,1263	0,1311	35,2532	0,1263

Post-test Weight Record		SYSTEM 1 – 1st hour				SYSTEM 1				
		Probe & Housing Number	Front Filter Number	Back Filter Number	gaskets	Probe & Housing Number	Front Filter Number	Back Filter Number	gaskets	Blanck
Date	Time	06	74	75	27	18	76	77	32	80
2019-03-26	16:45	61,3745	0,1322	0,1273	34,2174	108,9479	0,1268	0,1303	35,2550	0,1269
		61,3745	0,1321	0,1270	34,2168	108,9479	0,1266	0,1303	35,2547	0,1267
		61,3745	0,1321	0,1270	34,2168	108,9477	0,1266	0,1303	35,2547	0,1265
		61,3745	0,1321	0,1270	34,2168	108,9476	0,1266	0,1303	35,2547	0,1265

POLYTESTS
TESTING THROUGH YOUR REALITY

DILUTION TUNNEL PARTICULATE SAMPLER DATA

Date: 2019.03.25 Manufacturer: Hearthstone Model: GM 40

Project #: pI 20189 Run: 6 Tech: MM Reviewer: SP

		SYSTEM 2			
Pre-test Weight Record		Probe & Housing Number	Front Filter Number	Back Filter Number	gaskets
Date	Time	33	78	79	34
2019.03.25	17:00	109,3660	0,1272	0,1255	33,3676
2019.03.26	8:50	109,3621	0,1273	0,1256	33,3675

		SYSTEM 2			
Post-test Weight Record		Probe & Housing Number	Front Filter Number	Back Filter Number	gaskets
Date	Time	33	78	79	34
2019.03.26	10:45	109,3624	0,1285	0,1261	33,3695
2019.03.29	8:00	109,3624	0,1285	0,1259	33,3682
2019.04.01	8:00	109,3624	0,1286	0,1260	33,3683
2019.04.02	8:00	109,3625	0,1286	0,1260	33,3683

Paramètres

Tous les facteurs de corrections et autres paramètres qui peuvent être modifiés par l'utilisateur du fichier sont regroupés ici.

Code verrouillage:	HEA

Description du test

Test standard	EPA	
Run #	6	
Date	26-03-2019	
Technicien	M.M	
Project #	PI 20189	

Description de l'unité

Manufacturier	HEARTHSTONE	
Modèle	GM40	
Combustion system	Cat	
Appliance type	WOODSTOVE	
Firebox volume	1,31	cu ft.
Appliance weight empty	N.A	lbs
Appliance weight full	N.A	lbs

Paramètres du test

Logging time	1	min
Manufacturer's rated heat output	N.A	BTU/h Donnée fournie par le manfacturier
Targeted category	1	
Targeted output	N.A	BTU/h
Cp steel	N.A	BTU/lb-°F

Échantillonnage

Blank sampling rate	0,20	cuft/min
Internal probe diameter	0,18	in.
Calibration Factor (DGM #1):	1,001	Dimensionless
Equipment number (DGM #1):	EM 178	
Calibration Factor (DGM #2):	0,987	Dimensionless
Equipment number (DGM #2):	EM 178	
Calibration Factor (DGM #3):	0,996	
Equipment number (DGM #3):	EM 070	Dimensionless

Tunnel

Targeted tunnel flow rate	140	scfm
Tunnel diameter	6	in.
Molecular weight	29	
Pitot tube type	Standard	
Pitot tube coefficient	0,99	Dimensionless

Project nu.	PI 20189
Date	26-03-2019
Technicien	M.M

Fuel data

Fuel type	Dimension		
Fuel specie	D. Fir		
HHV		19810,0	kJ/kg
%C		48,7	
%H		6,9	
%O		43,9	
%Ash		0,5	
HHV		8519,2	Btu/lb
LHV		7451,0	Btu/lb

Default Fuel Values

	D. Fir	Oak/Maple
HHV	19 810	19 887
%C	48,73	50
%H	6,87	6,6
%O	43,9	42,9
%Ash	0,5	0,5
HHV (Btu/lb)	8519	8552
LHV (Btu/lb)	7451	7480

	Start	End
Barometer (kPa):	102,8	102,8
Barometer (in.Hg):	30,356829	30,35682857
Dry Bulb (F):	75,92	75,74
Humidity (%):	17,6	16,7
Air velocity (ft/min)	0	0

DGM #1	Final:	31094,396	cuft	Final:	880495,210	Liter
	Initial:	31049,886	cuft	Initial:	879234,830	Liter
DGM #2	Final:	29324,190	cuft	Final:	830368,580	Liter
	Initial:	29280,558	cuft	Initial:	829133,050	Liter

DGM room				Final:	791,420	cuft
				Initial:	732,550	cuft

Numéro de la ligne dans "Raw data" à partir duquel les données du VRAI test commencent 273

Autres données à rentrer: dans preload data, load data, traverse et filter set weight

Project nu.	PI 20189
Date	26-03-2019
Technicien	M.M

Preload data sheet

Test Load Weight:

Lower	Ideal	Upper
8,25	9,17	10,09

Load Volume: 0,5590 cu. ft

Loading Density: 16,438 lbs./ft3

Number of Spaces:

Spacer weight (lbs):

Load Density (wet): 38,520 lbs./ft3

Dry Wood Density: 32,149273

Piece Size (in): Thick	Wide	x Length	Weight lbs	Meter Moisture Content Dry Uncorrected %					Ave. MC x Weight	Volume Cubic Inches
1,5	3,5	8	0,746	19,6	19,3	19,8	19,9	19,8	14,68128	42,00
1,5	3,5	8	0,71	19	19,3	19,2	19,5	19,5	13,703	42,00
1,5	3,5	8	0,716	19,1	19,8	19,6	19,7	19,8	14,0336	42,00
1,5	3,5	8	0,726	19,3	19,8	19,9	19,6	19,3	14,21508	42,00
1,5	3,5	8	0,732	19,2	19,2	19,3	19,3	19,8	14,17152	42,00
1,5	3,5	8	0,778	19,8	19,6	19,3	19,9	19,6	15,27992	42,00
1,5	3,5	8	0,706	19,8	19,7	19,7	19,7	19,6	13,9082	42,00
1,5	3,5	8	0,716	20,1	19,9	19,8	19,9	19,6	14,21976	42,00
1,5	3,5	8	0,724	19,7	19,8	19,3	19,2	19,3	14,08904	42,00
1,5	3,5	8	0,702	20	20,4	20,6	20,6	20,8	14,37696	42,00
1,5	3,5	8	0,784	20,1	19,6	19,3	19,8	19,6	15,42912	42,00
1,5	3,5	8	0,726	19,4	19,8	19,4	19,5	19,6	14,18604	42,00
1,5	3,5	8	0,72	19,6	19,9	19,3	19,3	19,8	14,0976	42,00
1,5	3,5	8	0,746	20,1	20,6	20,3	20,8	20,9	15,32284	42,00
										0,00
1,5	3,5	8	0,746	19,4	19,8	19,4	19,8	19,9	14,66636	42,00
1,5	3,5		0,716	20	20,1	20,6	19,9	19,7	14,36296	0,00
1,5	3,5	8	0,828	19,7	19,1	19,2	19,2	19,2	15,96384	42,00
1,5	3,5	8	0,842	20,4	20,2	20	20	19,6	16,87368	42,00
1,5	3,5	8	0,818	20,3	20,2	20,3	20,8	20,3	16,67084	42,00
1,5	3,5	8	0,816	19,9	19,3	19,7	19,6	19,5	15,9936	42,00
1,5	3,5	8	0,826	20	20,3	20,8	20,7	20,3	16,86692	42,00
1,5	3,5	8	0,816	20,5	20,3	20,9	20,6	20,4	16,76064	42,00
1,5	3,5	8	0,814	19,6	19,3	19,8	19,3	19,5	15,873	42,00
1,5	3,5	8	0,86	20	20	19,7	19,2	19,3	16,8904	42,00
1,5	3,5	8	0,798	20,6	20,8	20,7	20,7	20,7	16,5186	42,00
1,5	3,5	8	0,808	19,1	19	19,2	19,2	19,5	15,5136	42,00
1,5	3,5	8	0,812	19,6	19,2	19,3	19,3	19,4	15,72032	42,00
1,5	3,5	8	0,802	20	20,3	20,3	20,6	20,8	16,3608	42,00
										0,00
										0,00
										0,00
									SUM MC:	426,74952

PreTest Load Weight: 21,53 lbs.

Dry Weight: 8,15 kg.

Average Moisture Content: %

Dry: 19,82

19,82

Must be 18-28

Wet: 16,54

must be 15,2-22

Project nu.	PI 20189
Date	26-03-2019
Technicien	M.M

FUEL LOAD DATA SHEET, CSA B415

Test Load Weight:

Lower	Ideal	Upper
8,3	9,2	10,1

* For boilers, a loading density factor of 10 lb/ft3 is applied

Load Volume: 0,21 cu. ft

Loading Density: 7,1 lbs./ft3

Number of Spaces: 16

Spacer weight: lbs

Load Density (wet): 36,1 lbs./ft3

Dry Wood Density: 30,1 lbs./ft3

Piece Size (in): Thick	Wide	Length	Weight lbs	Meter Moisture Content Dry Uncorrected %					Ave. MC x Weight	Volume Cubic Inches	Ave. MC %
1,5	3,5	13,5	1,57	19,30	19,60	19,70	19,80	19,90	30,90552	70,88	19,7
1,5	3,5	13,5	1,61	21,00	21,40	21,30	20,90	20,80	34,02312	70,88	21,1
1,5	3,5	13,5	1,53	20,50	20,80	20,90	20,60	20,40	31,53792	70,88	20,6
1,5	3,5	13,5	1,28	19,40	19,00	19,40	19,30	19,20	24,69132	70,88	19,3
1,5	3,5	13,5	1,41	20,50	19,70	19,90	20,00	20,10	28,29648	70,88	20,0
1,5	0,75	5	0,13			19,00			2,432	5,63	19,0
1,5	0,75	5	0,12			19,10			2,2538	5,63	19,1
1,5	0,75	5	0,09			19,40			1,746	5,63	19,4
1,5	0,75	5	0,10			19,20			1,9968	5,63	19,2
1,5	0,75	5	0,13			19,30			2,509	5,63	19,3
1,5	0,75	5	0,13			20,00			2,52	5,63	20,0
1,5	0,75	5	0,10			20,10			1,9698	5,63	20,1
1,5	0,75	5	0,13			19,60			2,5872	5,63	19,6
1,5	0,75	5	0,10			19,40			2,0176	5,63	19,4
1,5	0,75	5	0,14			19,30			2,6634	5,63	19,3
1,5	0,75	5	0,10			19,60			1,9208	5,63	19,6
1,5	0,75	5	0,11			19,70			2,0882	5,63	19,7
1,5	0,75	5	0,13			19,80			2,574	5,63	19,8
1,5	0,75	5	0,14			19,60			2,8224	5,63	19,6
1,5	0,75	5	0,1			19,40			1,94	5,63	19,4
1,5	0,75	5	0,14			19,40			2,716	5,63	19,4
										0,00	
										0,00	
										0,00	
										0,00	
										0,00	
										0,00	
										0,00	
										0,00	
										0,00	
								SUM MCx	186,21136		19,6 %

Test Load Weight: 9,29 lbs.

Dry Weight: 3,51 kg.

Average Moisture Content: %

Dry: 20,04 Dry(EPA) 20,04 Dry(B415 20,04

20,04 Must be 19-25

Wet: 16,69 must be 15,2-22

Coal Bed Range: 1,9 lbs. to 2,3 lbs.

TEST CHARGE:

Coal bed weight: 2,3 lbs.

Project nu.	PI 20189
Date	26-03-2019
Technicien	M.M

Tunnel Traverse Worksheet (for velocity calculations)

Static Pressure: 0,34 in. H20
Barometer: 29,900 in. Hg

Pour un tunnel de 12" et plus, prendre 6 lectures

	TUNNEL VELOCITY	TUNNEL TEMP	SQUARE ROOT
	In. wc	°F	
A center			0,0000
B center			0,0000
A1			0,0000
A2			0,0000
A3			0,0000
A4			0,0000
A5			0,0000
A6			0,0000
B1			0,0000
B2			0,0000
B3			0,0000
B4			0,0000
B5			0,0000
B6			0,0000
AVERAGE	#DIV/0!	#DIV/0!	0,0000

PITOT CONSTANT=
0,931

Pour un tunnel moins de 12", prendre 4 lectures

	TUNNEL VELOCITY	TUNNEL TEMP	SQUARE ROOT
	In. wc	°F	
A center	0,061	71,36	0,2470
B center	0,060	71,34	0,2449
A1	0,048	71,34	0,2191
A2	0,051	71,29	0,2258
A3	0,056	71,32	0,2366
A4	0,048	71,31	0,2191
B1	0,047	71,380	0,2168
B2	0,055	71,390	0,2345
B3	0,049	71,470	0,2214
B4	0,050	71,440	0,2236
AVERAGE	0,0525	71,3640	0,2289

Project nu.	PI 20189
Date	26-03-2019
Technicien	M.M

Filter set weight

	System 1 (g) 1st hour				System 1 (g)				System 2 (g)				Ambient blank (g)	Date	Heure
	probe	front	back	gasket	probe	front	back	gasket	probe	front	back	gasket	Filter		
Number	6	74	75	27	18	76	77	32	33	78	79	34	80		
Before (1)															
Before (2)															
Before (3)															
Before (4)															
Before (5)	61,3741	0,1325	0,1268	34,2147	108,9476	0,1263	0,1311	35,2531	109,3620	0,1272	0,1255	33,3676	0,1263	2019-03-25	17:00
Before (6)	61,3742	0,1326	0,1268	34,2148	108,9475	0,1263	0,1311	35,2532	109,3621	0,1273	0,1256	33,3675	0,1263	2019-03-26	08:00
After (1)	61,3745	0,1322	0,1273	34,2174	108,9479	0,1268	0,1303	35,2550	109,3624	0,1285	0,1261	33,3695	0,1269	2019-03-26	16:45
After (2)	61,3745	0,1321	0,1270	34,2168	108,9479	0,1266	0,1303	35,2547	109,3624	0,1285	0,1259	33,3682	0,1267	2019-03-29	08:00
After (3)	61,3745	0,1321	0,1270	34,2168	108,9477	0,1266	0,1303	35,2547	109,3624	0,1286	0,1260	33,3683	0,1265	2019-04-01	08:00
After (4)	61,3745	0,1321	0,1270	34,2168	108,9476	0,1266	0,1303	35,2547	109,3625	0,1286	0,1260	33,3683	0,1265	2019-04-02	08:00
After (5)															
After (6)	61,3745	0,1321	0,1270	34,2168	108,9476	0,1266	0,1303	35,2547	109,3625	0,1286	0,1260	33,3683	0,1265	2019-04-02	08:00
Difference	0,0003	-0,0005	0,0002	0,0020	0,0001	0,0003	-0,0008	0,0015	0,0004	0,0013	0,0004	0,0008	0,0002		
Total (mg)		2				3,1				2,9			0,2		
Total ajusté (mg)		**1,80**				**2,90**				**2,70**					

Project nu.	PI 20189
Date	26-03-2019
Technicien	M.M

demonstration only, negative filter weight rounded to zero.

Filter set weight

	System 1 (g) 1st hour				System 1 (g)				System 2 (g)				Ambient blank (g)	Date	Heure
	probe	front	back	gasket	probe	front	back	gasket	probe	front	back	gasket	Filter		
Number	6	74	75	27	18	76	77	32	33	78	79	34	80		
Before (1)															
Before (2)															
Before (3)															
Before (4)															
Before (5)	61,3741	0,1325	0,1268	34,2147	108,9476	0,1263	0,1311	35,2531	109,3620	0,1272	0,1255	33,3676	0,1263	2019-03-25	17:00
Before (6)	61,3742	0,1326	0,1268	34,2148	108,9475	0,1263	0,1311	35,2532	109,3621	0,1273	0,1256	33,3675	0,1263	2019-03-26	08:00
After (1)	61,3745	0,1322	0,1273	34,2174	108,9479	0,1268	0,1303	35,2550	109,3624	0,1285	0,1261	33,3695	0,1269	2019-03-26	16:45
After (2)	61,3745	0,1321	0,1270	34,2168	108,9479	0,1266	0,1303	35,2547	109,3624	0,1285	0,1259	33,3682	0,1267	2019-03-29	08:00
After (3)	61,3745	0,1321	0,1270	34,2168	108,9477	0,1266	0,1303	35,2547	109,3624	0,1286	0,1260	33,3683	0,1265	2019-04-01	08:00
After (4)	61,3745	0,1321	0,1270	34,2168	108,9476	0,1266	0,1303	35,2547	109,3625	0,1286	0,1260	33,3683	0,1265	2019-04-02	08:00
After (5)															
After (6)	61,3745	0,1326	0,1270	34,2168	108,9476	0,1266	0,1311	35,2547	109,3625	0,1286	0,1260	33,3683	0,1265	2019-04-02	08:00
Difference	0,0003	0,0000	0,0002	0,0020	0,0001	0,0003	0,0000	0,0015	0,0004	0,0013	0,0004	0,0008	0,0002		
Total (mg)		2,5				4,4				2,9			0,2		
Total ajusté (mg)		**2,30**				**4,20**				**2,70**					

Project nu.	PI 20189
Date	26-03-2019
Technicien	M.M

SFBA EPA EMISSION RESULTS

Test Duration: **229** min

PRESSURE FACTOR:	DGM 1	0,98612	
	DGM 2	0,98823	
	DGM 3	1,01460	
TEMPERATURE FACTORS	DGM 1	0,98980	
	DGM 2	0,98928	
	DGM 3	0,99527	
VOLUMES SAMPLED	DGM 1	43,488	SCft
	DGM 2	42,115	Scft
	DGM 3	59,195	SCft

TOTAL TUNNEL VOLUME : 39595

SAMPLE RATIOS

Sample Train 1:	910,494
Sample Train 2:	940,177

Paticulate concentration

Sample Train 1	**0,000071**	g/dscf
Sample Train 2	**0,000069**	g/dscf
Room	**0,000003**	g/dscf

TOTAL EMISSIONS

Sample Train 1	**2,69**	g
Sample Train 2	**2,59**	g

EMISSION RATES

Sample Train 1	**0,70**	g/hr
Sample Train 2	**0,68**	g/hr

1st hour emission rate **1,82** g/hr

	Train 1	Train 2
Cs	7,128E-05	6,88594E-05

RESULTS

Average emission rate: 0,7 g/hr

Burn Rate : 0,920 Dry kg/hr

BAROMETRIC PRESSURE

Average:	30,356829	in Hg
Start:	30,356829	in Hg
End:	30,356829	in Hg

DGM CONTROLLER VALUES

DGM 1	Final:	31094,396	Cuft
	Initial:	31049,886	Cuft
DGM 2	Final:	29324,190	Cuft
	Initial:	29280,558	Cuft
DGM #3	Final:	791,420	Cuft
	Initial:	732,550	Cuft

TEMPERATURES

DGM 1	533,444	°R
DGM 2	533,723	°R

CALIBRATION FACTORS

DGM 1	1,0010
DGM 2	0,9873
DGM #3	0,9958

TUNNEL FLOW RATE: 172,906 Dscfm

PARTICULATE CATCH

Total Sample Train 1:	3,10	mg
Total Sample Train 2:	2,90	mg
Total Sample Train 1 1st hour:	2,00	mg

DEVIATION: 1,82%

*		*	*	*	*	*1	*2	*3	*4	*5	*6	*7	*8	*	Mass flow 1	DGM 1	DGM 1	Filter 1	Mass flow 2	DGM 2	DGM 2	Filter 2
Elapsed		Weight				Flue	Room	Tunnel	Unit	Unit	Unit	Unit	Unit	Catalyst	Reading	Inlet T	Outlet T	Temp	Reading	Inlet T	Outlet T	Temp
Time	Raw data row	Remaining	CO	CO_2	O_2	Gas	Temp	Dry Bulb	Top	Back	R.Side	L.Side	Bottom up									
min		lbs	%	%	%	°F	°F	°F	°F	°F	°F	°F	°F	°F	cuft/min	oF	oF	oF	cuft/min	oF	oF	oF
0,00	273,00	9,3	0,2	9,2	0,0	241,5	69,0	121,7	292,7	268,3	351,2	344,7	352,5	452,1	0,19	72,20	72,13	70,07	0,19	72,39	72,43	70,59
1,0	274,0	9,2	0,1	4,2	0,0	255,1	69,1	94,2	288,7	268,5	349,0	343,9	349,5	472,6	0,19	72,28	72,13	70,13	0,19	72,43	72,46	70,68
2,0	275,0	9,1	0,0	4,2	0,0	277,4	69,1	91,6	288,5	267,8	348,5	342,7	347,0	559,4	0,19	72,27	72,14	70,20	0,19	72,43	72,51	70,73
3,0	276,0	9,0	0,0	5,2	0,0	291,7	69,0	91,0	290,8	266,9	345,7	341,3	345,2	593,3	0,19	72,23	72,14	70,28	0,19	72,41	72,51	70,82
4,0	277,0	8,9	0,0	6,5	0,0	299,3	68,9	90,6	294,4	264,9	344,0	340,1	343,0	601,3	0,19	72,29	72,17	70,38	0,19	72,43	72,55	70,93
5,0	278,0	8,8	0,0	7,6	0,0	282,5	68,8	85,5	300,3	263,8	342,1	338,4	342,1	636,5	0,19	72,34	72,19	70,42	0,19	72,41	72,54	70,99
6,0	279,0	8,7	0,0	8,7	0,0	261,2	68,8	82,9	301,0	261,2	340,5	337,0	340,8	639,8	0,19	72,26	72,18	70,52	0,19	72,34	72,54	71,01
7,0	280,0	8,7	0,0	3,9	0,0	245,3	68,9	81,8	299,2	259,6	339,2	334,3	340,3	587,1	0,19	72,23	72,19	70,58	0,19	72,32	72,55	71,10
8,0	281,0	8,7	0,0	3,2	0,0	233,5	68,9	80,7	296,6	256,8	335,2	332,4	339,0	551,4	0,19	72,22	72,19	70,66	0,19	72,31	72,56	71,17
9,0	282,0	8,6	0,0	3,0	0,0	225,4	68,9	79,8	295,8	261,7	333,8	329,7	337,9	548,0	0,19	72,19	72,18	70,76	0,19	72,31	72,56	71,22
10,0	283,0	8,6	0,0	2,8	0,0	220,5	68,7	80,2	296,1	274,1	331,1	327,3	336,8	546,7	0,19	72,11	72,17	70,84	0,19	72,26	72,56	71,27
11,0	284,0	8,6	0,0	2,7	0,0	217,0	68,7	80,0	295,4	280,9	328,5	325,0	335,4	548,4	0,19	71,95	72,14	70,92	0,19	72,16	72,56	71,34
12,0	285,0	8,5	0,0	2,8	0,0	214,8	68,6	79,8	294,8	285,8	326,1	322,1	333,8	552,7	0,19	71,85	72,11	71,02	0,19	72,12	72,54	71,37
13,0	286,0	8,5	0,0	2,9	0,0	213,1	68,7	79,4	294,8	289,6	323,5	319,2	332,0	555,0	0,19	71,82	72,11	71,05	0,19	72,09	72,52	71,41
14,0	287,0	8,4	0,0	3,0	0,0	211,9	68,6	79,2	294,3	292,5	320,0	316,8	330,1	559,4	0,19	71,86	72,07	71,10	0,19	72,10	72,53	71,45
15,0	288,0	8,4	0,0	3,1	0,0	211,2	68,7	79,1	294,0	294,7	317,1	313,9	328,1	564,4	0,19	71,81	72,05	71,14	0,19	72,05	72,52	71,47
16,0	289,0	8,4	0,0	3,2	0,0	210,9	68,7	79,0	293,4	296,4	314,9	311,3	326,7	570,7	0,19	71,69	72,02	71,18	0,19	71,96	72,50	71,50
17,0	290,0	8,3	0,0	3,3	0,0	211,4	68,5	78,7	293,4	297,5	312,4	308,5	324,6	577,1	0,19	71,70	72,00	71,21	0,19	71,95	72,48	71,51
18,0	291,0	8,3	0,0	3,6	0,0	212,2	68,7	78,9	292,7	298,3	309,9	305,6	322,4	589,5	0,19	71,66	71,96	71,26	0,19	71,93	72,47	71,50
19,0	292,0	8,2	0,0	3,8	0,0	213,0	68,5	78,9	292,7	298,7	307,7	302,9	321,1	600,3	0,19	71,64	71,96	71,28	0,19	71,90	72,45	71,54
20,0	293,0	8,2	0,0	3,9	0,0	214,5	68,4	78,9	292,3	299,0	304,2	300,5	318,9	608,0	0,19	71,58	71,93	71,29	0,19	71,84	72,44	71,55
21,0	294,0	8,2	0,0	4,0	0,0	215,9	68,4	78,8	292,2	298,9	302,1	298,1	317,1	613,2	0,19	71,66	71,93	71,32	0,19	71,89	72,44	71,56
22,0	295,0	8,1	0,0	4,1	0,0	218,8	68,5	78,9	292,6	298,7	299,2	295,4	314,8	613,7	0,19	71,75	71,94	71,32	0,19	71,90	72,44	71,58
23,0	296,0	8,0	0,0	5,2	0,0	220,3	68,3	79,3	294,6	298,4	297,7	293,1	312,8	578,7	0,19	71,71	71,91	71,38	0,19	71,87	72,42	71,60
24,0	297,0	7,9	0,0	8,6	0,0	223,8	68,7	79,4	300,2	298,0	296,1	291,0	311,5	582,8	0,19	71,63	71,89	71,38	0,19	71,82	72,40	71,62
25,0	298,0	7,8	0,0	12,3	0,0	231,3	68,9	80,9	308,6	297,7	294,0	289,0	309,6	611,6	0,19	71,75	71,91	71,45	0,19	71,87	72,40	71,62
26,0	299,0	7,7	0,1	15,0	0,0	241,7	68,9	82,5	317,9	297,7	292,0	287,9	307,5	651,4	0,19	71,91	71,94	71,45	0,19	71,95	72,39	71,68
27,0	300,0	7,6	0,1	15,1	0,0	251,6	69,1	84,5	327,2	297,9	291,8	286,5	305,8	693,0	0,19	72,11	71,97	71,51	0,19	72,08	72,44	71,74
28,0	301,0	7,5	0,3	16,1	0,0	259,6	69,5	85,4	334,8	282,4	291,0	286,0	304,1	725,6	0,19	72,38	72,05	71,55	0,19	72,27	72,49	71,81
29,0	302,0	7,4	0,2	14,8	0,0	258,9	69,7	85,9	342,9	271,3	290,4	285,6	302,1	693,0	0,19	72,68	72,12	71,60	0,19	72,47	72,55	71,86
30,0	303,0	7,3	0,0	10,6	0,0	257,1	69,8	85,3	348,0	263,9	290,9	285,7	300,4	685,5	0,19	72,92	72,20	71,65	0,19	72,64	72,61	71,93
31,0	304,0	7,2	0,0	10,2	0,0	256,8	69,7	85,0	350,8	257,8	290,5	285,5	298,6	676,3	0,19	73,13	72,26	71,71	0,19	72,80	72,68	72,01
32,0	305,0	7,1	0,0	11,9	0,0	260,0	69,8	85,3	355,0	252,9	290,3	285,2	297,0	681,8	0,19	73,22	72,31	71,77	0,19	72,89	72,75	72,07
33,0	306,0	7,0	0,1	15,7	0,0	266,2	69,7	85,4	361,1	248,8	290,6	285,3	295,4	729,5	0,19	73,22	72,37	71,85	0,19	72,95	72,76	72,13
34,0	307,0	6,8	0,2	16,7	0,0	273,0	69,3	85,3	368,1	246,0	290,1	285,7	293,6	748,1	0,19	73,21	72,39	71,90	0,19	72,96	72,78	72,18
35,0	308,0	6,7	0,5	17,0	0,0	278,8	69,4	85,2	375,8	243,2	290,8	286,1	292,2	761,7	0,19	73,17	72,38	71,92	0,19	72,99	72,79	72,23
36,0	309,0	6,6	0,9	17,1	0,0	284,5	69,3	85,6	383,9	241,5	291,2	286,7	290,8	755,6	0,19	73,10	72,39	71,96	0,19	72,97	72,79	72,27
37,0	310,0	6,5	0,3	17,0	0,0	287,7	69,4	85,5	391,8	240,7	292,1	287,7	289,1	754,8	0,19	73,02	72,40	71,98	0,19	72,95	72,80	72,32
38,0	311,0	6,3	0,2	17,1	0,0	290,9	69,3	85,6	399,6	239,7	292,8	289,2	287,5	761,9	0,19	72,93	72,38	72,01	0,19	72,94	72,81	72,35
39,0	312,0	6,2	0,8	17,2	0,0	293,7	69,3	85,1	407,6	239,3	293,5	290,7	285,9	784,0	0,19	72,90	72,39	72,05	0,19	72,91	72,80	72,42
40,0	313,0	6,1	0,5	17,2	0,0	296,1	69,6	85,1	415,1	238,7	295,8	292,6	284,6	793,8	0,19	72,83	72,37	72,10	0,19	72,88	72,78	72,47
41,0	314,0	6,0	0,6	17,2	0,0	298,9	69,6	85,4	422,8	239,1	297,7	294,7	283,2	798,6	0,19	72,79	72,36	72,12	0,19	72,83	72,79	72,51
42,0	315,0	5,8	0,7	17,2	0,0	301,4	69,0	85,6	429,5	239,4	298,4	296,6	281,8	798,0	0,19	72,87	72,34	72,17	0,19	72,82	72,77	72,58
43,0	316,0	5,7	0,9	17,1	0,0	303,1	69,2	85,5	436,7	240,0	300,1	298,9	280,5	798,8	0,19	72,76	72,32	72,19	0,19	72,77	72,74	72,61
44,0	317,0	5,6	1,0	17,2	0,0	304,0	69,3	85,4	443,0	240,0	302,5	301,4	279,1	791,3	0,19	72,61	72,30	72,20	0,19	72,70	72,72	72,65
45,0	318,0	5,5	1,1	17,1	0,0	304,9	69,3	85,7	448,9	241,0	304,6	303,8	277,9	786,2	0,19	72,53	72,28	72,28	0,19	72,63	72,68	72,69
46,0	319,0	5,4	1,4	17,0	0,0	306,4	69,3	85,6	454,7	242,1	307,3	306,4	276,5	790,2	0,19	72,51	72,26	72,29	0,19	72,62	72,65	72,73
47,0	320,0	5,3	1,5	16,9	0,0	306,3	69,5	86,1	460,7	243,5	309,9	309,1	275,2	789,7	0,19	72,46	72,23	72,28	0,19	72,57	72,65	72,74
48,0	321,0	5,1	1,7	16,9	0,0	307,2	69,4	85,8	465,8	244,7	312,6	311,6	273,9	790,0	0,19	72,44	72,18	72,32	0,19	72,51	72,61	72,79
49,0	322,0	5,0	1,7	16,9	0,0	308,5	69,4	85,9	470,8	246,2	314,6	314,4	272,8	790,5	0,19	72,42	72,18	72,35	0,19	72,46	72,59	72,86
50,0	323,0	4,9	1,9	16,9	0,0	309,4	69,3	85,8	475,8	248,4	316,9	317,2	271,5	791,1	0,19	72,41	72,15	72,37	0,19	72,42	72,57	72,89
51,0	324,0	4,8	1,9	16,9	0,0	309,5	69,5	86,2	480,6	249,6	319,7	320,2	270,3	793,7	0,19	72,42	72,15	72,42	0,19	72,43	72,55	72,92
52,0	325,0	4,7	2,0	16,9	0,0	310,4	69,5	86,2	485,8	251,1	321,5	323,2	269,0	794,7	0,19	72,48	72,15	72,42	0,19	72,47	72,56	72,92
53,0	326,0	4,5	1,8	17,1	0,0	310,9	69,6	86,4	492,3	253,4	324,8	326,3	268,1	793,4	0,19	72,48	72,13	72,46	0,19	72,48	72,55	72,96
54,0	327,0	4,4	2,1	17,0	0,0	311,2	69,4	86,1	497,8	255,5	327,0	329,1	267,1	794,6	0,19	72,45	72,10	72,48	0,19	72,45	72,54	73,00
55,0	328,0	4,3	2,2	16,9	0,0	311,8	69,5	86,2	502,8	257,3	329,6	332,6	266,0	794,1	0,19	72,43	72,11	72,52	0,19	72,41	72,53	73,02
56,0	329,0	4,2	2,3	16,9	0,0	311,4	69,4	86,4	507,0	259,2	332,8	335,7	265,2	792,1	0,19	72,42	72,10	72,52	0,19	72,42	72,55	73,08
57,0	330,0	4,1	2,3	16,9	0,0	310,6	69,7	86,5	510,2	261,0	335,1	338,7	264,1	789,5	0,19	72,50	72,07	72,54	0,19	72,43	72,51	73,10
58,0	331,0	4,0	2,2	16,8	0,0	310,6	69,3	86,2	513,1	263,4	337,2	342,0	263,1	792,5	0,19	72,56	72,07	72,55	0,19	72,47	72,48	73,11
59,0	332,0	3,9	2,1	16,8	0,0	310,5	69,2	86,2	516,4	265,2	340,1	345,2	261,8	800,2	0,19	72,49	72,04	72,57	0,19	72,42	72,49	73,13
60,0	333,0	3,7	1,9	16,9	0,0	310,7	69,2	85,8	519,1	268,1	343,7	347,5	261,1	800,5	0,19	72,49	72,04	72,56	0,19	72,42	72,47	70,31
61,0	334,0	3,6	2,0	16,8	0,0	311,4	69,1	86,0	521,1	268,8	345,4	350,9	259,4	803,5	0,19	72,48	72,01	72,61	0,19	72,42	72,49	70,37
62,0	335,0	3,5	2,1	16,7	0,0	311,3	69,2	86,3	521,9	271,7	348,7	354,3	258,6	798,8	0,19	72,48	71,99	72,61	0,19	72,39	72,47	70,43
63,0	336,0	3,4	2,6	16,5	0,0	311,8	69,0	86,1	522,3	273,5	350,5	357,5	257,1	794,4	0,19	72,40	71,97	72,61	0,19	72,35	72,45	70,45
64,0	337,0	3,3	2,7	16,4	0,0	311,1	69,3	86,3	522,5	275,7	354,0	360,3	256,4	792,8	0,19	72,30	71,94	72,62	0,19	72,27	72,43	70,48
65,0	338,0	3,2	2,6	16,4	0,0	311,1	69,4	86,4	523,2	278,1	356,6	363,3	255,2	792,3	0,19	72,41	71,97	72,63	0,19	72,29	72,43	70,57
66,0	339,0	3,1	2,6	16,4	0,0	310,8	69,3	86,6	523,7	280,9	359,6	366,3	254,3	791,4	0,19	72,50	71,95	72,65	0,19	72,32	72,42	70,62
67,0	340,0	3,0	2,4	16,4	0,0	310,2	69,3	86,4	523,8	282,0	361,8	369,1	253,2	791,4	0,19	72,52	71,93	72,64	0,19	72,33	72,38	70,68
68,0	341,0	2,9	2,1	16,4	0,0	309,3	69,1	86,2	524,1	284,6	364,6	372,2	252,5	797,2	0,19	72,51	71,92	72,66	0,19	72,30	72,36	70,74
69,0	342,0	2,8	1,9	16,5	0,0	309,3	69,3	86,0	524,2	286,6	367,2	375,1	251,6	805,6	0,19	72,41	71,89	72,66	0,19	72,26	72,36	70,81
70,0	343,0	2,7	1,5	16,6	0,0	308,1	69,4	86,0	524,9	288,3	370,3	377,8	250,8	814,8	0,19	72,46	71,91	72,68	0,19	72,25	72,33	70,90
71,0	344,0	2,6	0,9	16,7	0,0	306,8	69,7	85,8	525,6	290,9	373,3	380,3	250,3	817,5	0,19	72,55	71,93	72,67	0,19	72,29	72,33	70,97
72,0	345,0	2,6	0,3	16,7	0,0	305,1	69,7	85,5	526,3	292,0	375,3	383,0	249,6	825,2	0,19	72,66	71,93	72,69	0,19	72,35	72,31	71,03
73,0	346,0	2,5	0,1	16,1	0,0	300,4	69,7	85,0	526,3	293,2	377,8	385,3	248,8	803,8	0,19	72,75	71,93	72,69	0,19	72,37	72,33	71,08
74,0	347,0	2,4	0,0	14,7	0,0	295,1	69,6	85,0	524,3	294,4	380,7	387,3	248,4	782,4	0,19	72,74	71,93	72,71	0,19	72,43	72,33	71,13
75,0	348,0	2,4	0,0	14,0	0,0	290,4	69,6	84,6	522,4	295,8	383,4	389,1	248,1	769,9	0,19	72,70	71,92	72,70	0,19	72,42	72,33	71,19
76,0	349,0	2,3	0,0	13,7	0,0	286,0	69,4	84,2	518,4	297,0	384,3	391,0	247,5	755,4	0,19	72,72	71,91	72,70	0,19	72,41	72,32	71,29
77,0	350,0	2,3	0,0	13,3	0,0	281,8	69,6	84,2	514,7	297,4	387,3	392,0	247,3	738,8	0,19	72,73	71,92	72,72	0,19	72,46	72,33	71,31
78,0	351,0	2,3	0,0	12,9	0,0	277,8	69,6	83,7	510,5	298,4	388,5	393,5	247,1	720,1	0,19	72,72	71,91	72,73	0,19	72,44	72,34	71,34
79,0	352,0	2,2	0,0	12,7	0,0	274,1	69,6	83,3	506,1	298,0	389,9	394,0	246,8	710,0	0,19	72,73	71,93	72,74	0,19	72,45	72,31	71,41
80,0	353,0	2,2	0,0	12,5	0,0	270,5	69,6	83,3	501,1	298,4	390,6	394,9	246,6	698,5	0,19	72,78	71,93	72,72	0,19	72,50	72,34	71,43
81,0	354,0	2,1	0,0	12,4	0,0	266,9	69,3	82,6	496,5	298,5	392,5	395,5	246,5	691,2	0,19	72,65	71,91	72,71	0,19	72,42	72,35	71,47
82,0	355,0	2,1	0,0	12,1	0,0	263,3	69,1	82,9	491,4	299,8	392,9	396,1	246,4	683,8	0,19	72,57	71,90	72,69	0,19	72,42	72,35	71,45
83,0	356,0	2,1	0,0	11,9	0,0	259,7	69,4	82,3	486,5	300,3	394,7	396,4	246,5	677,4	0,19	72,51	71,89	72,67	0,19	72,38	72,34	71,49
84,0	357,0	2,0	0,0	11,5	0,0	256,3	69,5	82,5	481,0	300,6	395,4	396,2	246,5	675,2	0,19	72,61	71,92	72,68	0,19	72,42	72,36	71,56
85,0	358,0	2,0	0,0	11,3	0,0	253,4	69,3	82,2	475,1	300,4	395,2	396,5	246,6	673,4	0,19	72,61	71,91	72,68	0,19	72,43	72,34	71,63
86,0	359,0	2,0	0,0	10,9	0,0	250,9	69,3	81,9	469,6	300,3	395,2	396,3	246,7	668,6	0,19	72,53	71,87	72,68	0,19	72,40	72,33	71,67
87,0	360,0	2,0	0,0	10,6	0,0	248,2	69,0	81,8	464,1	300,0	395,3	396,2	247,0	663,6	0,19	72,43	71,85	72,66	0,19	72,35	72,30	71,68
88,0	361,0	1,9	0,0	10,6	0,0	245,8	69,1	81,6	458,5	300,3	396,6	395,7	247,3	661,6	0,19	72,35	71,83	72,64	0,19	72,28	72,31	71,71

89,0	362,0	1,9	0,0	10,3	0,0	242,6	69,6	81,0	452,5	300,3	395,7	395,5	248,0	657,1	0,19	72,33	71,83	72,64	0,19	72,27	72,32	71,74
90,0	363,0	1,9	0,0	9,9	0,0	239,4	69,5	81,5	446,6	299,7	396,1	394,8	248,5	652,8	0,19	72,58	71,85	72,67	0,19	72,39	72,32	71,80
91,0	364,0	1,9	0,0	9,7	0,0	236,3	69,8	82,6	440,8	299,2	395,2	394,3	249,0	645,8	0,19	72,84	71,91	72,67	0,19	72,56	72,39	71,86
92,0	365,0	1,9	0,0	9,8	0,0	233,7	70,2	83,6	435,2	299,3	395,1	393,3	249,5	638,8	0,19	73,18	71,98	72,65	0,19	72,73	72,44	71,94
93,0	366,0	1,9	0,0	9,5	0,0	231,2	70,4	84,3	430,0	298,9	394,2	392,6	250,2	633,4	0,19	73,54	72,08	72,70	0,19	72,97	72,53	72,00
94,0	367,0	1,8	0,0	9,5	0,0	228,8	70,6	84,6	424,7	298,3	392,7	391,5	250,7	624,5	0,19	73,90	72,20	72,75	0,19	73,25	72,65	72,10
95,0	368,0	1,8	0,0	9,4	0,0	226,5	70,6	84,4	419,7	297,8	392,5	390,1	251,3	619,6	0,19	74,27	72,32	72,78	0,19	73,54	72,75	72,18
96,0	369,0	1,8	0,0	9,4	0,0	224,3	70,6	84,0	414,4	297,5	391,5	388,5	251,8	615,9	0,19	74,58	72,42	72,83	0,19	73,81	72,87	72,26
97,0	370,0	1,8	0,0	9,4	0,0	222,4	70,7	83,5	409,5	296,8	390,4	387,0	252,3	606,9	0,19	74,84	72,56	72,86	0,19	74,04	72,98	72,34
98,0	371,0	1,8	0,0	9,5	0,0	220,2	71,0	83,2	404,6	297,3	388,4	385,9	252,8	601,3	0,19	74,94	72,61	72,90	0,19	74,17	73,05	72,41
99,0	372,0	1,8	0,0	9,5	0,0	218,0	70,9	82,6	400,3	296,6	387,8	383,9	253,4	597,2	0,19	74,97	72,70	72,98	0,19	74,33	73,14	72,49
100,0	373,0	1,7	0,0	9,5	0,0	215,7	70,8	82,4	395,5	295,8	386,2	382,1	253,7	594,8	0,19	75,02	72,77	72,99	0,19	74,43	73,19	72,55
101,0	374,0	1,7	0,0	9,6	0,0	214,0	70,8	82,1	390,6	295,4	385,1	380,9	254,3	595,4	0,19	75,10	72,84	73,04	0,19	74,53	73,25	72,61
102,0	375,0	1,7	0,0	9,5	0,0	212,4	71,0	81,6	386,8	294,7	384,0	379,3	254,7	591,7	0,19	75,11	72,89	73,09	0,19	74,63	73,30	72,67
103,0	376,0	1,7	0,0	9,6	0,0	210,7	70,9	81,5	382,2	294,6	382,5	377,7	255,4	591,6	0,19	75,09	72,94	73,12	0,19	74,66	73,36	72,73
104,0	377,0	1,7	0,0	9,6	0,0	208,9	70,9	81,5	378,5	294,2	381,2	376,2	255,7	585,6	0,19	75,00	72,98	73,14	0,19	74,71	73,42	72,78
105,0	378,0	1,7	0,0	9,6	0,0	207,3	71,0	81,4	374,9	293,6	380,0	374,8	256,0	582,7	0,19	74,92	72,98	73,15	0,19	74,67	73,43	72,83
106,0	379,0	1,7	0,0	9,6	0,0	205,8	71,1	81,2	371,2	293,6	378,9	373,3	256,6	580,3	0,19	74,83	73,01	73,21	0,19	74,63	73,46	72,90
107,0	380,0	1,6	0,0	9,6	0,0	204,4	71,0	81,2	367,7	293,1	376,3	372,1	256,9	578,0	0,19	74,74	73,05	73,22	0,19	74,62	73,47	72,94
108,0	381,0	1,6	0,0	9,8	0,0	203,1	71,2	80,9	364,2	292,0	376,0	370,5	257,3	577,4	0,19	74,69	73,05	73,26	0,19	74,57	73,49	72,96
109,0	382,0	1,6	0,0	9,7	0,0	201,8	70,8	80,7	360,8	291,2	374,6	369,0	258,0	574,8	0,19	74,69	73,12	73,29	0,19	74,59	73,51	73,03
110,0	383,0	1,6	0,0	9,6	0,0	200,6	70,8	80,6	357,4	290,5	373,4	367,9	258,3	575,4	0,19	74,66	73,12	73,29	0,19	74,62	73,55	73,05
111,0	384,0	1,6	0,0	9,6	0,0	199,6	70,8	80,5	354,5	289,9	372,8	366,4	258,8	573,2	0,19	74,66	73,15	73,34	0,19	74,65	73,59	73,10
112,0	385,0	1,6	0,0	9,6	0,0	198,4	70,8	80,3	351,5	289,7	371,6	364,9	259,3	572,6	0,19	74,66	73,17	73,36	0,19	74,66	73,61	73,14
113,0	386,0	1,6	0,0	9,6	0,0	197,5	71,0	80,3	348,7	289,2	370,2	363,8	259,7	573,9	0,19	74,69	73,21	73,39	0,19	74,66	73,64	73,17
114,0	387,0	1,5	0,0	9,7	0,0	196,3	71,1	80,3	346,2	288,6	368,7	362,3	260,1	573,5	0,19	74,71	73,24	73,38	0,19	74,70	73,68	73,19
115,0	388,0	1,5	0,0	9,7	0,0	195,2	71,0	80,3	343,7	288,1	367,7	361,2	260,6	573,1	0,19	74,80	73,28	73,42	0,19	74,78	73,71	73,23
116,0	389,0	1,5	0,0	9,7	0,0	194,6	71,2	80,4	341,3	287,2	366,6	359,8	260,9	568,8	0,19	74,91	73,30	73,44	0,19	74,86	73,74	73,25
117,0	390,0	1,5	0,0	9,7	0,0	193,4	71,0	80,4	339,1	287,0	365,3	358,7	261,3	569,5	0,19	74,94	73,36	73,48	0,19	74,91	73,78	73,28
118,0	391,0	1,5	0,0	9,7	0,0	192,9	71,3	80,3	336,7	286,3	364,1	357,7	261,8	567,1	0,19	74,99	73,40	73,50	0,19	74,96	73,84	73,32
119,0	392,0	1,5	0,0	9,7	0,0	192,2	71,4	80,2	334,9	285,7	363,0	356,4	262,2	568,6	0,19	75,03	73,44	73,49	0,19	74,99	73,87	73,34
120,0	393,0	1,5	0,0	9,8	0,0	191,5	71,5	80,2	332,8	284,8	361,7	355,4	262,5	566,3	0,19	75,12	73,51	73,53	0,19	75,07	73,92	73,36
121,0	394,0	1,4	0,0	9,7	0,0	191,1	71,4	80,1	331,0	285,0	360,6	354,1	263,1	564,2	0,19	75,09	73,51	73,55	0,19	75,06	73,97	73,38
122,0	395,0	1,4	0,0	9,7	0,0	190,0	71,6	80,3	328,9	283,7	359,9	353,1	263,2	561,1	0,19	75,04	73,54	73,54	0,19	75,06	73,99	73,39
123,0	396,0	1,4	0,0	9,7	0,0	189,4	71,6	80,1	327,1	282,6	358,1	352,0	263,8	560,7	0,19	75,07	73,56	73,55	0,19	75,10	74,04	73,41
124,0	397,0	1,4	0,0	9,6	0,0	188,5	71,3	79,9	325,7	281,7	358,2	350,7	264,4	561,0	0,19	75,09	73,61	73,57	0,19	75,10	74,08	73,41
125,0	398,0	1,4	0,0	9,6	0,0	188,0	71,4	79,8	323,8	281,3	356,7	349,7	264,7	560,6	0,19	75,04	73,65	73,60	0,19	75,09	74,11	73,44
126,0	399,0	1,4	0,0	9,7	0,0	187,3	71,3	79,8	322,5	280,4	355,5	348,9	265,0	559,9	0,19	74,97	73,65	73,59	0,19	75,10	74,13	73,42
127,0	400,0	1,4	0,0	9,6	0,0	186,8	71,3	79,8	320,7	279,6	354,6	348,1	265,6	557,6	0,19	74,89	73,65	73,57	0,19	75,04	74,14	73,44
128,0	401,0	1,3	0,0	9,7	0,0	186,2	71,3	79,4	319,3	279,2	353,4	346,7	265,9	559,1	0,19	74,78	73,68	73,60	0,19	74,97	74,15	73,45
129,0	402,0	1,3	0,0	9,7	0,0	185,8	71,4	79,6	318,2	278,2	353,2	345,7	266,3	557,0	0,19	74,72	73,68	73,61	0,19	74,91	74,14	73,45
130,0	403,0	1,3	0,0	9,7	0,0	185,1	71,4	79,6	316,9	277,8	352,5	344,6	266,7	557,0	0,19	74,71	73,69	73,60	0,19	74,89	74,16	73,45
131,0	404,0	1,3	0,0	9,7	0,0	184,3	71,5	79,6	315,5	277,5	350,9	343,6	266,9	555,8	0,19	74,70	73,70	73,62	0,19	74,88	74,18	73,47
132,0	405,0	1,3	0,0	9,7	0,0	183,6	71,3	79,3	314,4	276,9	349,9	342,8	267,1	553,9	0,19	74,70	73,73	73,61	0,19	74,86	74,20	73,47
133,0	406,0	1,3	0,0	9,8	0,0	183,1	71,1	79,3	313,1	275,8	349,2	342,1	267,3	548,8	0,19	74,63	73,73	73,62	0,19	74,84	74,19	73,47
134,0	407,0	1,3	0,0	9,6	0,0	182,5	71,1	79,1	311,8	275,6	347,0	341,3	267,6	551,3	0,19	74,61	73,76	73,64	0,19	74,83	74,22	73,49
135,0	408,0	1,3	0,0	9,6	0,0	182,3	71,2	79,0	310,8	275,1	347,3	340,4	267,6	553,1	0,19	74,55	73,76	73,63	0,19	74,81	74,23	73,49
136,0	409,0	1,2	0,0	9,6	0,0	182,0	71,3	79,1	309,8	274,0	346,5	339,8	267,8	549,9	0,19	74,50	73,75	73,62	0,19	74,76	74,24	73,47
137,0	410,0	1,2	0,0	9,6	0,0	181,3	71,2	79,0	308,6	273,4	345,8	339,2	268,0	551,9	0,19	74,47	73,77	73,60	0,19	74,73	74,24	73,52
138,0	411,0	1,2	0,0	9,8	0,0	180,8	71,2	79,2	307,8	273,2	344,8	338,5	268,0	551,5	0,19	74,50	73,77	73,61	0,19	74,72	74,25	73,50
139,0	412,0	1,2	0,0	9,7	0,0	180,9	71,3	79,1	306,9	272,0	344,2	337,8	268,4	550,4	0,19	74,60	73,82	73,60	0,19	74,76	74,30	73,48
140,0	413,0	1,2	0,0	9,9	0,0	180,6	71,2	78,9	306,0	271,1	342,8	337,2	268,5	550,6	0,19	74,63	73,83	73,60	0,19	74,77	74,29	73,46
141,0	414,0	1,2	0,0	9,8	0,0	180,2	71,3	79,0	305,1	270,6	342,5	336,5	268,5	552,4	0,19	74,62	73,85	73,61	0,19	74,79	74,31	73,48
142,0	415,0	1,1	0,0	9,8	0,0	180,0	71,4	79,0	304,3	270,3	341,1	335,8	268,7	553,6	0,19	74,55	73,84	73,57	0,19	74,75	74,32	73,49
143,0	416,0	1,1	0,0	9,8	0,0	180,2	71,3	78,9	303,2	269,2	339,9	335,4	268,8	553,7	0,19	74,46	73,85	73,55	0,19	74,70	74,33	73,48
144,0	417,0	1,1	0,0	9,7	0,0	179,7	71,2	78,9	302,3	267,9	339,0	335,3	268,7	554,6	0,19	74,38	73,84	73,55	0,19	74,70	74,31	73,48
145,0	418,0	1,1	0,0	9,7	0,0	179,5	71,2	78,8	301,5	267,8	338,6	334,6	269,0	555,7	0,19	74,36	73,81	73,53	0,19	74,67	74,32	73,48
146,0	419,0	1,1	0,0	9,7	0,0	179,6	71,3	79,0	300,7	266,4	338,4	333,9	269,3	558,3	0,19	74,39	73,84	73,54	0,19	74,67	74,35	73,47
147,0	420,0	1,1	0,0	9,6	0,0	179,3	71,0	78,8	300,2	265,8	337,0	333,5	269,3	559,1	0,19	74,39	73,84	73,51	0,19	74,64	74,35	73,47
148,0	421,0	1,1	0,0	9,7	0,0	179,2	71,3	78,8	299,6	264,7	336,9	332,9	269,1	559,9	0,19	74,38	73,84	73,53	0,19	74,62	74,37	73,47
149,0	422,0	1,1	0,0	9,6	0,0	179,5	71,3	79,0	298,9	264,4	335,1	332,4	269,1	560,9	0,19	74,36	73,87	73,52	0,19	74,61	74,37	73,46
150,0	423,0	1,0	0,0	9,5	0,0	179,5	71,1	78,7	298,3	263,7	334,4	331,7	269,1	562,9	0,19	74,32	73,86	73,52	0,19	74,59	74,38	73,46
151,0	424,0	1,0	0,0	9,4	0,0	179,6	70,9	78,7	297,7	263,1	333,5	331,5	269,2	563,5	0,19	74,32	73,88	73,50	0,19	74,62	74,39	73,44
152,0	425,0	1,0	0,0	9,4	0,0	179,6	71,2	78,5	297,0	262,6	332,5	330,9	268,9	565,3	0,19	74,34	73,90	73,50	0,19	74,62	74,40	73,47
153,0	426,0	1,0	0,0	9,4	0,0	179,9	71,4	78,6	296,3	262,2	332,2	330,8	269,4	564,5	0,19	74,31	73,91	73,48	0,19	74,61	74,42	73,44
154,0	427,0	1,0	0,0	9,3	0,0	180,1	71,2	78,8	295,6	261,7	331,1	329,9	269,3	567,6	0,19	74,27	73,91	73,47	0,19	74,59	74,40	73,44
155,0	428,0	1,0	0,0	9,4	0,0	180,2	71,1	78,7	295,1	261,2	330,6	329,6	269,3	568,1	0,19	74,22	73,89	73,47	0,19	74,56	74,43	73,43
156,0	429,0	1,0	0,0	9,3	0,0	180,5	71,0	78,8	294,4	260,6	329,6	328,6	269,2	569,4	0,19	74,20	73,90	73,47	0,19	74,55	74,44	73,41
157,0	430,0	1,0	0,0	9,3	0,0	180,8	70,9	78,7	293,7	259,6	328,7	328,0	269,0	570,2	0,19	74,17	73,90	73,44	0,19	74,53	74,44	73,38
158,0	431,0	0,9	0,0	9,3	0,0	180,8	71,0	78,6	293,4	259,7	328,4	327,9	269,2	572,4	0,19	74,18	73,93	73,44	0,19	74,51	74,45	73,39
159,0	432,0	0,9	0,0	9,4	0,0	180,8	71,1	78,5	292,8	259,6	327,3	327,1	269,2	570,1	0,19	74,18	73,93	73,44	0,19	74,52	74,45	73,38
160,0	433,0	0,9	0,0	9,3	0,0	180,8	71,3	78,7	292,3	259,3	327,4	326,5	269,2	573,4	0,19	74,16	73,93	73,45	0,19	74,50	74,46	73,38
161,0	434,0	0,9	0,0	9,3	0,0	180,9	71,3	78,6	291,9	258,3	326,5	326,0	269,5	571,9	0,19	74,15	73,95	73,43	0,19	74,46	74,47	73,38
162,0	435,0	0,9	0,0	9,1	0,0	180,9	71,3	78,7	291,5	258,7	325,4	325,3	269,2	569,3	0,19	74,15	73,93	73,44	0,19	74,46	74,47	73,36
163,0	436,0	0,9	0,0	9,2	0,0	181,1	71,1	78,6	291,1	258,2	324,3	324,7	269,0	570,7	0,19	74,16	73,93	73,43	0,19	74,44	74,48	73,37
164,0	437,0	0,9	0,0	9,1	0,0	181,4	71,1	78,7	290,5	257,7	323,6	324,2	269,1	570,5	0,19	74,18	73,96	73,44	0,19	74,46	74,48	73,38
165,0	438,0	0,9	0,0	9,0	0,0	181,5	71,1	78,6	290,2	256,9	323,5	323,8	269,0	570,7	0,19	74,18	73,96	73,43	0,19	74,45	74,49	73,39
166,0	439,0	0,8	0,0	9,0	0,0	181,8	71,0	78,5	289,6	256,4	322,0	323,2	268,9	567,8	0,19	74,12	73,96	73,40	0,19	74,43	74,49	73,38
167,0	440,0	0,8	0,0	9,1	0,0	181,3	71,1	78,6	289,3	256,2	322,5	322,4	268,8	571,8	0,19	74,08	73,96	73,38	0,19	74,39	74,51	73,34
168,0	441,0	0,8	0,0	9,0	0,0	181,5	71,1	78,8	288,9	255,6	321,6	322,2	268,7	572,6	0,19	74,08	73,96	73,40	0,19	74,37	74,49	73,34
169,0	442,0	0,8	0,0	9,1	0,0	181,6	71,3	78,8	288,3	255,3	320,8	321,5	268,8	571,1	0,19	74,10	73,95	73,39	0,19	74,39	74,51	73,33
170,0	443,0	0,8	0,0	9,1	0,0	181,2	71,5	78,7	287,8	255,8	319,5	320,7	268,7	563,6	0,19	74,14	73,99	73,39	0,19	74,40	74,52	73,34
171,0	444,0	0,8	0,0	8,9	0,0	180,6	71,5	78,5	287,0	255,2	319,9	320,2	268,6	555,2	0,19	74,16	74,00	73,41	0,19	74,42	74,53	73,32
172,0	445,0	0,8	0,0	8,8	0,0	179,9	71,4	78,5	286,4	254,8	318,3	319,2	268,5	551,8	0,19	74,20	74,02	73,41	0,19	74,46	74,56	73,33
173,0	446,0	0,8	0,0	8,7	0,0	179,5	71,6	78,5	285,8	254,4	319,0	318,7	268,6	553,0	0,19	74,30	74,03	73,43	0,19	74,56	74,60	73,35
174,0	447,0	0,8	0,0	8,7	0,0	179,1	71,4	78,7	285,0	254,4	317,6	317,9	268,6	551,8	0,19	74,40	74,06	73,42	0,19	74,62	74,62	73,34
175,0	448,0	0,7	0,0	8,7	0,0	178,7	71,5	78,6	284,2	253,9	317,3	317,3	268,7	550,8	0,19	74,51	74,09	73,41	0,19	74,71	74,66	73,33
176,0	449,0	0,7	0,0	8,7	0,0	178,4	71,4	78,6	283,5	253,6	316,9	316,8	268,6	552,6	0,19	74,46	74,08	73,44	0,19	74,69	74,67	73,36
177,0	450,0	0,7	0,0	8,7	0,0	178,3	71,2	78,6	282,8	253,0	315,1	316,2	268,3	554,2	0,19	74,40	74,09	73,44	0,19	74,69	74,68	73,33
178,0	451,0	0,7	0,0	8,7	0,0	178,0	71,4	78,5	282,2	253,0	315,8	315,5	268,4	553,1	0,19	74,35	74,10	73,43	0,19	74,66	74,69	73,34
179,0	452,0	0,7	0,0	8,6	0,0	177,5	71,4	78,7	281,6	253,0	315,6	315,2	268,5	549,6	0,19	74,38	74,11	73,47	0,19	74,65	74,71	73,34
180,0	453,0	0,7	0,0	8,5	0,0	177,1	71,3	78,6	280,9	252,1	314,7	314,9	268,6	549,4	0,19	74,40	74,13	73,46	0,19	74,66	74,69	73,33
181,0	454,0	0,7	0,0	8,6	0,0	177,0	71,4	78,7	280,2	251,7	313,8	314,0	268,6	548,8	0,19	74,41	74,14	73,44	0,19	74,66	74,72	73,36

182,0	455,0	0,7	0,0	8,7	0,0	177,0	71,4	78,5	279,6	251,3	313,4	313,5	268,6	547,4	0,19	74,42	74,16	73,47	0,19	74,67	74,72	73,35
183,0	456,0	0,6	0,0	8,6	0,0	177,0	71,4	78,7	278,9	251,4	312,3	312,9	268,6	551,0	0,19	74,43	74,15	73,47	0,19	74,68	74,72	73,37
184,0	457,0	0,6	0,0	8,5	0,0	177,2	71,6	78,6	278,4	250,8	311,6	312,1	268,8	551,3	0,19	74,47	74,17	73,49	0,19	74,74	74,75	73,34
185,0	458,0	0,6	0,0	10,5	0,0	175,9	71,7	78,6	277,9	250,5	311,4	311,9	268,8	542,1	0,19	74,44	74,17	73,48	0,19	74,72	74,75	73,35
186,0	459,0	0,6	0,0	11,1	0,0	174,9	71,6	78,7	277,4	250,2	310,9	311,4	268,8	536,9	0,19	74,43	74,18	73,49	0,19	74,69	74,75	73,34
187,0	460,0	0,6	0,0	11,0	0,0	173,8	71,5	78,7	276,9	249,8	309,5	311,1	269,0	536,0	0,19	74,42	74,19	73,51	0,19	74,72	74,77	73,38
188,0	461,0	0,6	0,0	11,0	0,0	173,1	71,6	78,4	276,8	249,1	310,6	310,9	269,1	535,8	0,19	74,42	74,19	73,50	0,19	74,71	74,77	73,37
189,0	462,0	0,5	0,0	11,0	0,0	172,5	71,5	78,5	276,3	248,5	309,8	310,7	269,1	537,2	0,19	74,47	74,20	73,51	0,19	74,76	74,79	73,38
190,0	463,0	0,5	0,0	11,1	0,0	172,1	71,5	78,5	276,2	248,1	309,7	310,0	269,4	539,5	0,19	74,49	74,22	73,52	0,19	74,78	74,80	73,40
191,0	464,0	0,5	0,0	11,1	0,0	171,6	71,5	78,4	276,0	247,5	309,6	309,9	269,6	538,0	0,19	74,54	74,25	73,53	0,19	74,82	74,83	73,40
192,0	465,0	0,5	0,0	10,7	0,0	171,5	71,5	78,4	275,6	246,7	308,3	310,0	269,9	539,7	0,19	74,49	74,25	73,53	0,19	74,75	74,82	73,42
193,0	466,0	0,5	0,0	10,8	0,0	171,0	71,5	78,4	275,2	245,8	308,6	309,9	270,3	538,7	0,19	74,42	74,24	73,53	0,19	74,75	74,80	73,36
194,0	467,0	0,5	0,0	10,6	0,0	170,9	71,1	78,2	275,1	245,3	308,2	309,8	270,5	538,0	0,19	74,40	74,23	73,54	0,19	74,77	74,82	73,36
195,0	468,0	0,4	0,0	10,6	0,0	170,7	71,2	78,2	275,0	244,6	308,0	310,3	270,4	536,2	0,19	74,36	74,23	73,55	0,19	74,74	74,82	73,39
196,0	469,0	0,4	0,0	10,5	0,0	170,6	71,3	78,2	274,9	244,4	308,4	310,1	270,4	534,4	0,19	74,31	74,21	73,55	0,19	74,71	74,83	73,39
197,0	470,0	0,4	0,0	10,4	0,0	170,6	71,3	78,2	274,8	243,7	308,3	310,3	270,9	534,7	0,19	74,37	74,23	73,55	0,19	74,75	74,85	73,38
198,0	471,0	0,4	0,0	10,5	0,0	170,2	71,6	78,3	274,7	244,0	308,4	310,5	271,1	537,0	0,19	74,40	74,24	73,56	0,19	74,79	74,84	73,40
199,0	472,0	0,4	0,0	10,5	0,0	169,8	71,5	78,4	274,8	243,8	308,8	310,0	271,5	539,9	0,19	74,44	74,24	73,54	0,19	74,78	74,86	73,41
200,0	473,0	0,4	0,0	10,5	0,0	169,8	71,7	78,3	274,7	243,1	309,3	309,8	271,9	543,0	0,19	74,58	74,30	73,55	0,19	74,86	74,88	73,41
201,0	474,0	0,4	0,0	10,4	0,0	169,9	71,7	78,4	274,6	243,1	308,5	310,0	272,2	542,9	0,19	74,64	74,31	73,55	0,19	74,93	74,91	73,40
202,0	475,0	0,4	0,0	10,3	0,0	170,2	71,7	78,4	274,6	242,0	308,7	310,1	272,3	541,6	0,19	74,62	74,34	73,57	0,19	74,90	74,93	73,41
203,0	476,0	0,4	0,0	10,3	0,0	170,2	71,8	78,6	274,7	241,3	309,2	310,2	272,7	544,8	0,19	74,59	74,34	73,58	0,19	74,93	74,94	73,40
204,0	477,0	0,3	0,0	10,3	0,0	170,3	71,7	78,6	274,7	240,9	308,7	310,2	272,8	546,1	0,19	74,62	74,34	73,57	0,19	74,95	74,96	73,42
205,0	478,0	0,3	0,0	10,2	0,0	170,5	71,7	78,5	274,8	240,4	309,1	310,2	273,0	548,0	0,19	74,69	74,37	73,59	0,19	74,99	74,98	73,42
206,0	479,0	0,3	0,0	10,2	0,0	171,0	71,7	78,7	274,8	240,2	309,4	310,0	273,4	547,3	0,19	74,76	74,40	73,60	0,19	75,04	74,99	73,45
207,0	480,0	0,3	0,0	10,0	0,0	171,3	71,6	78,6	274,8	239,3	309,6	309,9	273,8	548,9	0,19	74,82	74,42	73,63	0,19	75,10	75,04	73,44
208,0	481,0	0,3	0,0	9,9	0,0	171,5	71,9	78,7	274,6	239,0	308,8	310,0	273,8	550,7	0,19	74,79	74,46	73,62	0,19	75,08	75,04	73,47
209,0	482,0	0,3	0,0	9,9	0,0	171,6	71,7	78,8	274,5	238,2	309,3	309,6	274,2	550,8	0,19	74,87	74,46	73,64	0,19	75,15	75,06	73,47
210,0	483,0	0,3	0,0	9,9	0,0	172,0	71,8	78,8	274,6	238,1	308,9	309,6	274,2	552,6	0,19	74,91	74,48	73,64	0,19	75,19	75,08	73,47
211,0	484,0	0,2	0,0	9,8	0,0	172,4	71,7	79,0	274,8	238,1	308,9	309,5	274,4	555,0	0,19	74,95	74,51	73,67	0,19	75,21	75,11	73,51
212,0	485,0	0,2	0,0	9,6	0,0	172,6	71,8	79,0	274,7	237,8	308,9	309,3	274,9	555,0	0,19	75,03	74,54	73,65	0,19	75,29	75,13	73,50
213,0	486,0	0,2	0,0	9,7	0,0	172,5	72,2	79,1	274,7	237,2	309,0	309,0	274,8	556,8	0,19	75,09	74,56	73,66	0,19	75,32	75,18	73,52
214,0	487,0	0,2	0,0	9,5	0,0	172,8	72,1	79,1	274,6	236,8	309,3	308,9	275,0	559,7	0,19	75,12	74,58	73,69	0,19	75,35	75,19	73,53
215,0	488,0	0,2	0,0	9,4	0,0	173,2	71,9	79,0	274,5	235,8	308,6	309,0	275,6	562,1	0,19	75,10	74,61	73,72	0,19	75,35	75,20	73,56
216,0	489,0	0,2	0,0	9,3	0,0	173,7	72,1	78,9	274,5	235,7	308,6	308,3	275,5	563,5	0,19	75,06	74,62	73,74	0,19	75,37	75,22	73,58
217,0	490,0	0,2	0,0	9,3	0,0	174,1	72,0	79,1	274,5	235,6	308,8	308,3	275,6	565,4	0,19	75,10	74,64	73,74	0,19	75,39	75,24	73,59
218,0	491,0	0,2	0,0	9,2	0,0	174,5	72,1	79,0	274,5	235,4	308,8	308,1	275,8	567,3	0,19	75,11	74,66	73,77	0,19	75,39	75,24	73,61
219,0	492,0	0,2	0,0	9,1	0,0	175,3	72,2	79,0	274,5	234,7	308,3	307,8	276,0	570,6	0,19	75,10	74,66	73,77	0,19	75,39	75,25	73,62
220,0	493,0	0,1	0,0	9,2	0,0	175,3	72,2	79,2	274,5	234,3	308,7	307,5	276,1	572,7	0,19	75,11	74,69	73,79	0,19	75,39	75,28	73,67
221,0	494,0	0,1	0,0	9,3	0,0	175,7	72,2	79,2	274,3	233,8	308,3	307,1	276,2	571,6	0,19	75,10	74,71	73,81	0,19	75,38	75,29	73,67
222,0	495,0	0,1	0,0	9,4	0,0	176,0	72,2	79,2	274,5	233,4	308,4	306,6	276,3	566,5	0,19	75,07	74,70	73,82	0,19	75,40	75,29	73,70
223,0	496,0	0,1	0,0	9,4	0,0	176,2	72,2	79,3	274,5	232,9	308,1	306,4	276,5	566,0	0,19	75,08	74,71	73,84	0,19	75,37	75,30	73,68
224,0	497,0	0,1	0,0	9,4	0,0	176,4	72,1	79,4	274,8	232,2	308,2	305,8	276,7	567,2	0,19	75,09	74,74	73,87	0,19	75,38	75,32	73,70
225,0	498,0	0,1	0,0	9,5	0,0	176,6	72,0	79,4	274,7	232,1	307,5	305,5	276,7	569,7	0,19	75,15	74,75	73,88	0,19	75,41	75,33	73,72
226,0	499,0	0,1	0,0	9,5	0,0	176,8	72,1	79,2	274,8	231,6	307,3	305,0	276,6	572,5	0,19	75,21	74,79	73,90	0,19	75,45	75,35	73,74
227,0	500,0	0,1	0,0	9,6	0,0	177,2	72,3	79,1	274,9	230,9	307,8	304,6	276,8	572,2	0,19	75,24	74,82	73,92	0,19	75,52	75,38	73,76
228,0	501,0	0,1	0,0	9,7	0,0	177,4	72,3	79,2	275,2	230,6	308,0	304,4	276,7	572,5	0,19	75,29	74,85	73,92	0,19	75,57	75,41	73,78
229,0	502,0	0,0	0,0	9,6	0,0	177,5	72,2	79,3	275,3	230,3	307,1	304,0	277,0	574,8	0,19	75,30	74,86	73,95	0,19	75,58	75,43	73,79

Manufacturer: HEARTHSTONE
Model: GM40

Run: 6
Project #: PI 20189
Test Duration: 229 min

Note: In the "Input data", "Calc. % O_2", "Fuel Properties", and "Mass Balance" columns, [e], [d], [g], [a]. [b], [c], [h], [u], [w], [j], and [k] refer to their respective variables in Clauses

	HHV	LHV
Eff	80,22%	86,71%
Comb Eff	97,00%	97,00%
HT Eff	82,71%	89,39%
Output	14 628	kJ/h
Burn Rate	0,92	kg/h
Grams CO	155	g
Input	18 234	kJ/h
MC wet	16,69	

Ultimate CO_2
$CO_{2\text{-ult}}$ 19,64
F_0
1,062

Overall Heating Efficiency: 80,22%
Combustion Efficiency: 97,00%
Heat Transfer Efficiency: 82,71%

Heat Output: 13 876 Btu/h
Heat Input: 17 297 Btu/h
Burn Duration: 3,82 h
Burn Rate: 2,03 lb/h
Stack Temp: 219,4 Deg. F

Averages	0,27	10,65	1,15	20,22	9,43	104,15	21,39	99,1%	83,7%	83,0%
INPUT DATA			Oxygen Calculation			Input Data		Combust	Heat	Net
Elapsed Time	Weight Remaining (kg)	% CO [e]	% CO_2 [d]	Excess Air EA	Total O_2	Calc. % O_2 [g]	Flue Gas (ºC)	Room Temp (ºC)	Eff %	Transfer %	Eff %
0,00	4,22	0,20	9,23	108,1%	20,32	10,98	116,4	20,6	98,5%	82,6%	81,4%
1,00	4,17	0,11	4,24	351,3%	20,65	16,36	123,9	20,6	98,9%	74,3%	73,5%
2,00	4,13	0,01	4,16	370,7%	20,66	16,50	136,3	20,6	100,9%	72,1%	72,8%
3,00	4,08	0,01	5,19	278,2%	20,60	15,41	144,3	20,5	100,8%	74,4%	75,0%
4,00	4,04	0,00	6,47	203,5%	20,51	14,04	148,5	20,5	100,6%	76,8%	77,2%
5,00	3,99	0,00	7,57	159,3%	20,44	12,86	139,2	20,4	100,5%	79,3%	79,7%
6,00	3,95	0,00	8,74	124,6%	20,36	11,62	127,3	20,5	100,4%	81,5%	81,8%
7,00	3,95	0,00	3,88	405,6%	20,68	16,80	118,5	20,5	101,2%	73,9%	74,8%
8,00	3,95	0,00	3,15	522,7%	20,73	17,58	112,0	20,5	101,6%	71,8%	73,0%
9,00	3,90	0,00	3,05	544,2%	20,74	17,69	107,4	20,5	101,7%	72,1%	73,4%
10,00	3,90	0,00	2,76	612,5%	20,76	18,00	104,7	20,4	101,9%	70,9%	72,3%
11,00	3,90	0,00	2,65	640,5%	20,76	18,11	102,8	20,4	102,0%	70,7%	72,1%
12,00	3,86	0,00	2,80	600,7%	20,75	17,95	101,6	20,3	101,9%	71,9%	73,3%
13,00	3,86	0,00	2,89	579,9%	20,75	17,86	100,6	20,4	101,8%	72,7%	74,0%
14,00	3,81	0,00	2,98	558,9%	20,74	17,76	100,0	20,4	101,7%	73,3%	74,6%
15,00	3,81	0,00	3,09	534,8%	20,74	17,64	99,5	20,4	101,6%	74,0%	75,2%
16,00	3,81	0,00	3,23	508,2%	20,73	17,50	99,4	20,4	101,5%	74,6%	75,8%
17,00	3,76	0,00	3,34	487,8%	20,72	17,38	99,6	20,3	101,5%	75,0%	76,1%
18,00	3,76	0,00	3,56	451,7%	20,70	17,15	100,1	20,4	101,4%	75,8%	76,8%
19,00	3,72	0,00	3,75	422,7%	20,69	16,94	100,6	20,3	101,3%	76,4%	77,4%
20,00	3,72	0,00	3,85	409,7%	20,69	16,83	101,4	20,2	101,2%	76,6%	77,5%
21,00	3,72	0,00	3,99	392,4%	20,68	16,69	102,2	20,2	101,2%	76,9%	77,8%
22,00	3,67	0,00	4,15	373,3%	20,67	16,52	103,8	20,3	101,1%	77,1%	78,0%
23,00	3,63	0,00	5,21	276,8%	20,60	15,38	104,6	20,2	100,9%	79,4%	80,1%
24,00	3,58	0,00	8,65	127,1%	20,37	11,72	106,5	20,4	100,4%	83,1%	83,4%
25,00	3,54	0,00	12,32	59,4%	20,13	7,81	110,7	20,5	100,2%	84,6%	84,8%
26,00	3,49	0,06	15,02	30,3%	19,94	4,90	116,5	20,5	99,8%	85,1%	84,9%
27,00	3,45	0,09	15,08	29,5%	19,94	4,81	122,0	20,6	99,6%	84,8%	84,5%
28,00	3,40	0,30	16,09	19,9%	19,86	3,62	126,4	20,8	98,5%	84,8%	83,5%
29,00	3,36	0,16	14,77	31,6%	19,95	5,11	126,1	21,0	99,2%	84,5%	83,8%
30,00	3,31	0,02	10,60	85,0%	20,24	9,63	125,0	21,0	100,1%	83,0%	83,1%
31,00	3,27	0,01	10,22	92,1%	20,26	10,04	124,9	20,9	100,2%	82,8%	82,9%
32,00	3,22	0,01	11,90	65,0%	20,15	8,25	126,6	21,0	100,2%	83,5%	83,6%
33,00	3,17	0,06	15,71	24,6%	19,90	4,16	130,1	20,9	99,8%	84,6%	84,4%
34,00	3,08	0,17	16,75	16,1%	19,82	2,99	133,9	20,7	99,2%	84,6%	84,0%
35,00	3,04	0,53	16,98	12,2%	19,78	2,54	137,1	20,8	97,5%	84,4%	82,3%
36,00	2,99	0,86	17,14	9,1%	19,75	2,18	140,3	20,7	96,0%	84,2%	80,9%
37,00	2,95	0,27	17,01	13,7%	19,80	2,66	142,1	20,8	98,7%	84,3%	83,2%
38,00	2,86	0,21	17,13	13,3%	19,80	2,57	143,8	20,7	99,0%	84,3%	83,4%
39,00	2,81	0,78	17,19	9,3%	19,75	2,17	145,4	20,7	96,4%	84,0%	81,0%
40,00	2,77	0,52	17,17	11,0%	19,77	2,34	146,7	20,9	97,6%	84,1%	82,0%
41,00	2,72	0,59	17,23	10,3%	19,76	2,24	148,3	20,9	97,2%	84,0%	81,7%
42,00	2,63	0,66	17,22	9,8%	19,76	2,20	149,7	20,6	96,9%	83,9%	81,3%
43,00	2,59	0,89	17,14	8,9%	19,75	2,16	150,6	20,7	95,9%	83,7%	80,3%
44,00	2,54	0,98	17,16	8,3%	19,74	2,09	151,1	20,7	95,5%	83,7%	79,9%
45,00	2,49	1,13	17,09	7,8%	19,74	2,08	151,6	20,7	94,8%	83,6%	79,3%
46,00	2,45	1,39	17,01	6,8%	19,73	2,02	152,4	20,7	93,7%	83,5%	78,2%
47,00	2,40	1,55	16,94	6,2%	19,72	2,00	152,4	20,9	93,0%	83,4%	77,6%
48,00	2,31	1,71	16,93	5,4%	19,71	1,93	152,9	20,8	92,3%	83,3%	77,0%
49,00	2,27	1,75	16,91	5,3%	19,71	1,92	153,6	20,8	92,2%	83,3%	76,8%
50,00	2,22	1,86	16,91	4,6%	19,70	1,86	154,1	20,7	91,7%	83,2%	76,3%
51,00	2,18	1,86	16,91	4,7%	19,70	1,86	154,2	20,8	91,7%	83,2%	76,4%
52,00	2,13	1,95	16,94	4,0%	19,69	1,77	154,6	20,8	91,4%	83,2%	76,0%
53,00	2,04	1,75	17,06	4,4%	19,70	1,76	154,9	20,9	92,2%	83,3%	76,8%
54,00	2,00	2,05	16,99	3,1%	19,68	1,66	155,1	20,8	91,0%	83,2%	75,7%
55,00	1,95	2,20	16,93	2,7%	19,68	1,65	155,4	20,8	90,4%	83,1%	75,1%
56,00	1,91	2,33	16,93	2,0%	19,67	1,57	155,2	20,8	89,9%	83,0%	74,7%
57,00	1,86	2,34	16,88	2,2%	19,67	1,62	154,8	20,9	89,8%	83,1%	74,6%
58,00	1,81	2,15	16,83	3,5%	19,69	1,78	154,8	20,7	90,5%	83,1%	75,2%
59,00	1,77	2,08	16,79	4,1%	19,69	1,86	154,7	20,7	90,8%	83,1%	75,4%
60,00	1,68	1,88	16,88	4,7%	19,70	1,88	154,9	20,7	91,6%	83,2%	76,2%
61,00	1,63	1,98	16,81	4,6%	19,70	1,90	155,2	20,6	91,2%	83,1%	75,8%
62,00	1,59	2,14	16,73	4,1%	19,69	1,90	155,2	20,7	90,6%	83,0%	75,2%
63,00	1,54	2,64	16,51	2,6%	19,68	1,84	155,4	20,6	88,6%	82,8%	73,3%
64,00	1,50	2,73	16,42	2,6%	19,68	1,89	155,1	20,7	88,1%	82,8%	73,0%
65,00	1,45	2,65	16,40	3,1%	19,68	1,96	155,1	20,8	88,4%	82,8%	73,2%
66,00	1,41	2,59	16,37	3,6%	19,69	2,03	154,9	20,7	88,6%	82,8%	73,4%
67,00	1,36	2,45	16,36	4,5%	19,70	2,12	154,6	20,7	89,2%	82,9%	73,9%
68,00	1,32	2,11	16,41	6,1%	19,72	2,25	154,0	20,6	90,5%	83,0%	75,1%
69,00	1,27	1,87	16,50	7,0%	19,73	2,30	154,0	20,7	91,5%	83,1%	76,1%
70,00	1,22	1,45	16,63	8,6%	19,75	2,39	153,4	20,8	93,3%	83,3%	77,7%
71,00	1,18	0,88	16,73	11,5%	19,78	2,61	152,7	20,9	95,8%	83,5%	80,1%
72,00	1,18	0,26	16,70	15,8%	19,82	2,99	151,7	20,9	98,8%	83,8%	82,7%
73,00	1,13	0,07	16,05	21,9%	19,88	3,79	149,1	21,0	99,7%	83,8%	83,5%
74,00	1,09	0,02	14,65	33,8%	19,97	5,31	146,2	20,9	100,0%	83,5%	83,5%
75,00	1,09	0,01	14,03	39,9%	20,01	5,98	143,6	20,9	100,1%	83,4%	83,4%
76,00	1,04	0,01	13,66	43,7%	20,04	6,37	141,1	20,8	100,1%	83,4%	83,5%
77,00	1,04	0,00	13,32	47,5%	20,06	6,74	138,8	20,9	100,1%	83,4%	83,5%
78,00	1,04	0,00	12,92	52,0%	20,09	7,16	136,6	20,9	100,2%	83,4%	83,5%
79,00	1,00	0,00	12,71	54,5%	20,10	7,39	134,5	20,9	100,2%	83,4%	83,5%
80,00	1,00	0,00	12,51	57,0%	20,11	7,60	132,5	20,9	100,2%	83,4%	83,6%
81,00	0,95	0,00	12,40	58,4%	20,12	7,72	130,5	20,7	100,2%	83,5%	83,6%
82,00	0,95	0,00	12,15	61,7%	20,14	7,99	128,5	20,6	100,2%	83,5%	83,6%
83,00	0,95	0,00	11,90	65,0%	20,15	8,25	126,5	20,8	100,2%	83,5%	83,7%
84,00	0,91	0,00	11,54	70,2%	20,18	8,64	124,6	20,8	100,2%	83,5%	83,6%
85,00	0,91	0,00	11,26	74,5%	20,20	8,94	123,0	20,7	100,2%	83,4%	83,6%
86,00	0,91	0,00	10,88	80,5%	20,22	9,34	121,6	20,7	100,2%	83,3%	83,5%
87,00	0,91	0,00	10,65	84,5%	20,24	9,59	120,1	20,5	100,3%	83,3%	83,5%
88,00	0,86	0,00	10,58	85,6%	20,24	9,66	118,8	20,6	100,3%	83,4%	83,6%
89,00	0,86	0,00	10,35	89,8%	20,26	9,91	117,0	20,9	100,3%	83,4%	83,6%
90,00	0,86	0,00	9,87	99,0%	20,29	10,42	115,2	20,8	100,3%	83,2%	83,5%
91,00	0,86	0,00	9,74	101,7%	20,30	10,56	113,5	21,0	100,3%	83,3%	83,5%
92,00	0,86	0,00	9,84	99,6%	20,29	10,45	112,1	21,2	100,3%	83,5%	83,7%

93,00	0,86	0,00	9,54	105,9%	20,31	10,77	110,7	21,4	100,3%	83,4%	83,7%
94,00	0,82	0,00	9,51	106,6%	20,31	10,80	109,3	21,5	100,3%	83,5%	83,8%
95,00	0,82	0,00	9,42	108,4%	20,32	10,89	108,1	21,5	100,3%	83,5%	83,8%
96,00	0,82	0,00	9,42	108,4%	20,32	10,89	106,8	21,5	100,3%	83,6%	83,9%
97,00	0,82	0,00	9,37	109,5%	20,32	10,95	105,8	21,5	100,3%	83,7%	83,9%
98,00	0,82	0,00	9,47	107,3%	20,31	10,84	104,6	21,7	100,3%	83,8%	84,1%
99,00	0,82	0,00	9,54	105,8%	20,31	10,77	103,3	21,6	100,3%	84,0%	84,2%
100,00	0,77	0,00	9,47	107,3%	20,31	10,84	102,1	21,6	100,3%	84,0%	84,3%
101,00	0,77	0,00	9,57	105,1%	20,31	10,73	101,1	21,6	100,3%	84,1%	84,4%
102,00	0,77	0,00	9,51	106,5%	20,31	10,80	100,2	21,7	100,3%	84,2%	84,4%
103,00	0,77	0,00	9,57	105,1%	20,31	10,73	99,3	21,6	100,3%	84,3%	84,5%
104,00	0,77	0,00	9,57	105,1%	20,31	10,73	98,3	21,6	100,3%	84,3%	84,6%
105,00	0,77	0,00	9,62	104,1%	20,30	10,68	97,4	21,7	100,3%	84,4%	84,7%
106,00	0,77	0,00	9,56	105,5%	20,31	10,75	96,6	21,7	100,3%	84,5%	84,7%
107,00	0,73	0,00	9,64	103,8%	20,30	10,67	95,8	21,7	100,3%	84,6%	84,8%
108,00	0,73	0,00	9,75	101,3%	20,30	10,54	95,1	21,8	100,3%	84,7%	84,9%
109,00	0,73	0,00	9,72	102,0%	20,30	10,58	94,3	21,5	100,3%	84,7%	84,9%
110,00	0,73	0,00	9,64	103,7%	20,30	10,66	93,7	21,6	100,3%	84,7%	85,0%
111,00	0,73	0,00	9,56	105,5%	20,31	10,75	93,1	21,6	100,3%	84,7%	85,0%
112,00	0,73	0,00	9,57	105,1%	20,31	10,73	92,4	21,5	100,3%	84,8%	85,0%
113,00	0,73	0,00	9,62	104,1%	20,30	10,68	92,0	21,6	100,3%	84,8%	85,1%
114,00	0,68	0,00	9,69	102,7%	20,30	10,61	91,3	21,7	100,3%	84,9%	85,2%
115,00	0,68	0,00	9,67	103,0%	20,30	10,63	90,7	21,7	100,3%	84,9%	85,2%
116,00	0,68	0,01	9,70	102,3%	20,30	10,59	90,3	21,8	100,3%	85,0%	85,2%
117,00	0,68	0,01	9,67	103,0%	20,30	10,63	89,7	21,7	100,3%	85,0%	85,3%
118,00	0,68	0,01	9,69	102,6%	20,30	10,61	89,4	21,8	100,3%	85,1%	85,3%
119,00	0,68	0,01	9,70	102,3%	20,30	10,59	89,0	21,9	100,3%	85,1%	85,3%
120,00	0,68	0,01	9,75	101,3%	20,30	10,54	88,6	22,0	100,3%	85,1%	85,4%
121,00	0,64	0,01	9,67	103,0%	20,30	10,63	88,4	21,9	100,3%	85,1%	85,4%
122,00	0,64	0,01	9,67	103,0%	20,30	10,63	87,8	22,0	100,3%	85,2%	85,4%
123,00	0,64	0,01	9,67	103,0%	20,30	10,63	87,4	22,0	100,3%	85,2%	85,4%
124,00	0,64	0,01	9,59	104,7%	20,31	10,71	86,9	21,8	100,3%	85,2%	85,4%
125,00	0,64	0,01	9,61	104,3%	20,31	10,70	86,7	21,9	100,3%	85,2%	85,4%
126,00	0,64	0,01	9,67	103,0%	20,30	10,63	86,3	21,8	100,3%	85,3%	85,5%
127,00	0,64	0,01	9,56	105,4%	20,31	10,75	86,0	21,8	100,3%	85,2%	85,5%
128,00	0,59	0,01	9,69	102,6%	20,30	10,61	85,7	21,9	100,3%	85,3%	85,5%
129,00	0,59	0,01	9,74	101,6%	20,30	10,55	85,4	21,9	100,3%	85,4%	85,6%
130,00	0,59	0,01	9,66	103,3%	20,30	10,64	85,0	21,9	100,3%	85,4%	85,6%
131,00	0,59	0,01	9,67	103,0%	20,30	10,63	84,6	21,9	100,3%	85,4%	85,6%
132,00	0,59	0,01	9,72	101,9%	20,30	10,57	84,2	21,8	100,3%	85,4%	85,7%
133,00	0,59	0,01	9,75	101,3%	20,30	10,54	83,9	21,7	100,3%	85,5%	85,7%
134,00	0,59	0,01	9,61	104,4%	20,31	10,70	83,6	21,7	100,3%	85,4%	85,7%
135,00	0,59	0,01	9,59	104,7%	20,31	10,71	83,5	21,8	100,3%	85,4%	85,7%
136,00	0,54	0,01	9,61	104,4%	20,31	10,70	83,3	21,8	100,3%	85,5%	85,7%
137,00	0,54	0,01	9,62	104,0%	20,30	10,68	82,9	21,8	100,3%	85,5%	85,7%
138,00	0,54	0,01	9,77	100,9%	20,29	10,52	82,7	21,8	100,3%	85,6%	85,8%
139,00	0,54	0,01	9,69	102,6%	20,30	10,61	82,7	21,8	100,3%	85,5%	85,8%
140,00	0,54	0,01	9,87	98,9%	20,29	10,42	82,6	21,8	100,3%	85,6%	85,8%
141,00	0,54	0,01	9,79	100,6%	20,29	10,50	82,3	21,9	100,3%	85,6%	85,8%
142,00	0,50	0,01	9,80	100,2%	20,29	10,49	82,2	21,9	100,3%	85,6%	85,8%
143,00	0,50	0,01	9,75	101,3%	20,30	10,54	82,3	21,8	100,3%	85,6%	85,8%
144,00	0,50	0,01	9,67	103,0%	20,30	10,63	82,1	21,8	100,3%	85,6%	85,8%
145,00	0,50	0,01	9,74	101,6%	20,30	10,56	82,0	21,8	100,3%	85,6%	85,8%
146,00	0,50	0,01	9,66	103,3%	20,30	10,64	82,0	21,8	100,3%	85,6%	85,8%
147,00	0,50	0,01	9,59	104,7%	20,31	10,72	81,9	21,7	100,3%	85,5%	85,8%
148,00	0,50	0,01	9,67	102,9%	20,30	10,62	81,8	21,9	100,3%	85,6%	85,8%
149,00	0,50	0,01	9,56	105,4%	20,31	10,75	81,9	21,8	100,3%	85,5%	85,8%
150,00	0,45	0,01	9,49	106,9%	20,31	10,82	81,9	21,7	100,3%	85,5%	85,7%
151,00	0,45	0,01	9,41	108,7%	20,32	10,91	82,0	21,6	100,3%	85,5%	85,7%
152,00	0,45	0,01	9,44	108,0%	20,32	10,87	82,0	21,8	100,3%	85,5%	85,7%
153,00	0,45	0,01	9,42	108,3%	20,32	10,89	82,1	21,9	100,3%	85,5%	85,7%
154,00	0,45	0,01	9,34	110,1%	20,32	10,98	82,3	21,8	100,3%	85,4%	85,7%
155,00	0,45	0,01	9,37	109,4%	20,32	10,94	82,3	21,7	100,3%	85,4%	85,7%
156,00	0,45	0,01	9,29	111,3%	20,33	11,03	82,5	21,7	100,3%	85,4%	85,6%
157,00	0,45	0,01	9,32	110,5%	20,32	11,00	82,7	21,6	100,3%	85,4%	85,6%
158,00	0,41	0,01	9,29	111,2%	20,33	11,03	82,6	21,7	100,3%	85,4%	85,6%
159,00	0,41	0,01	9,36	109,7%	20,32	10,96	82,7	21,7	100,3%	85,4%	85,6%
160,00	0,41	0,01	9,28	111,6%	20,33	11,05	82,7	21,8	100,3%	85,4%	85,6%
161,00	0,41	0,01	9,27	111,6%	20,33	11,05	82,7	21,8	100,3%	85,4%	85,6%
162,00	0,41	0,01	9,14	114,6%	20,34	11,19	82,7	21,8	100,3%	85,3%	85,5%
163,00	0,41	0,01	9,24	112,4%	20,33	11,08	82,8	21,7	100,3%	85,3%	85,6%
164,00	0,41	0,01	9,06	116,6%	20,34	11,28	83,0	21,7	100,3%	85,2%	85,5%
165,00	0,41	0,01	9,04	117,0%	20,34	11,29	83,1	21,7	100,3%	85,2%	85,5%
166,00	0,36	0,01	9,01	117,8%	20,34	11,33	83,2	21,7	100,3%	85,2%	85,5%
167,00	0,36	0,01	9,08	116,2%	20,34	11,26	82,9	21,7	100,3%	85,3%	85,5%
168,00	0,36	0,01	9,04	117,0%	20,34	11,29	83,1	21,7	100,3%	85,2%	85,5%
169,00	0,36	0,01	9,09	115,8%	20,34	11,24	83,1	21,8	100,3%	85,3%	85,5%
170,00	0,36	0,01	9,06	116,6%	20,34	11,28	82,9	22,0	100,3%	85,3%	85,5%
171,00	0,36	0,01	8,89	120,7%	20,35	11,45	82,6	21,9	100,3%	85,2%	85,5%
172,00	0,36	0,01	8,80	123,2%	20,36	11,56	82,2	21,9	100,3%	85,2%	85,5%
173,00	0,36	0,01	8,68	126,1%	20,37	11,68	81,9	22,0	100,3%	85,2%	85,4%
174,00	0,36	0,01	8,71	125,2%	20,36	11,65	81,7	21,9	100,3%	85,2%	85,5%
175,00	0,32	0,01	8,71	125,2%	20,36	11,65	81,5	21,9	100,3%	85,2%	85,5%
176,00	0,32	0,01	8,71	125,2%	20,36	11,65	81,4	21,9	100,3%	85,2%	85,5%
177,00	0,32	0,01	8,75	124,4%	20,36	11,61	81,3	21,8	100,3%	85,2%	85,5%
178,00	0,32	0,01	8,68	126,1%	20,37	11,68	81,1	21,9	100,3%	85,2%	85,5%
179,00	0,32	0,01	8,56	129,1%	20,37	11,81	80,8	21,9	100,3%	85,2%	85,5%
180,00	0,32	0,01	8,55	129,6%	20,37	11,82	80,6	21,8	100,3%	85,2%	85,5%
181,00	0,32	0,01	8,65	126,9%	20,37	11,72	80,6	21,9	100,3%	85,3%	85,5%
182,00	0,32	0,01	8,66	126,5%	20,37	11,70	80,5	21,9	100,3%	85,3%	85,5%
183,00	0,27	0,01	8,61	127,8%	20,37	11,75	80,6	21,9	100,3%	85,2%	85,5%
184,00	0,27	0,01	8,52	130,4%	20,38	11,86	80,7	22,0	100,3%	85,2%	85,5%
185,00	0,27	0,01	10,53	86,4%	20,24	9,71	80,0	22,1	100,2%	86,0%	86,2%
186,00	0,27	0,01	11,08	77,2%	20,21	9,13	79,4	22,0	100,2%	86,2%	86,4%
187,00	0,27	0,01	10,98	78,9%	20,21	9,24	78,8	22,0	100,2%	86,2%	86,4%
188,00	0,27	0,01	11,04	77,8%	20,21	9,16	78,4	22,0	100,2%	86,3%	86,4%
189,00	0,23	0,01	11,03	78,0%	20,21	9,18	78,1	21,9	100,2%	86,3%	86,5%
190,00	0,23	0,01	11,09	76,9%	20,21	9,11	77,8	22,0	100,2%	86,3%	86,5%
191,00	0,23	0,01	11,14	76,2%	20,20	9,06	77,6	21,9	100,2%	86,4%	86,5%
192,00	0,23	0,01	10,68	83,8%	20,23	9,55	77,5	21,9	100,2%	86,2%	86,4%
193,00	0,23	0,01	10,81	81,6%	20,23	9,41	77,2	22,0	100,2%	86,3%	86,5%
194,00	0,23	0,01	10,65	84,4%	20,24	9,59	77,1	21,7	100,2%	86,2%	86,4%
195,00	0,18	0,01	10,58	85,5%	20,24	9,66	77,0	21,8	100,2%	86,2%	86,4%
196,00	0,18	0,01	10,50	87,0%	20,25	9,75	77,0	21,8	100,2%	86,2%	86,4%
197,00	0,18	0,01	10,43	88,2%	20,25	9,82	77,0	21,8	100,2%	86,2%	86,4%
198,00	0,18	0,01	10,46	87,6%	20,25	9,78	76,8	22,0	100,2%	86,2%	86,4%
199,00	0,18	0,01	10,54	86,2%	20,24	9,70	76,6	21,9	100,2%	86,2%	86,4%
200,00	0,18	0,01	10,48	87,3%	20,25	9,76	76,6	22,0	100,2%	86,2%	86,4%
201,00	0,18	0,01	10,38	89,0%	20,25	9,87	76,6	22,0	100,2%	86,2%	86,4%
202,00	0,18	0,01	10,31	90,3%	20,26	9,94	76,8	22,1	100,2%	86,2%	86,4%
203,00	0,18	0,01	10,30	90,6%	20,26	9,96	76,8	22,1	100,2%	86,2%	86,4%
204,00	0,14	0,01	10,25	91,5%	20,26	10,01	76,9	22,0	100,2%	86,1%	86,3%
205,00	0,14	0,01	10,25	91,5%	20,26	10,01	77,0	22,0	100,2%	86,1%	86,3%
206,00	0,14	0,01	10,15	93,3%	20,27	10,11	77,2	22,1	100,2%	86,1%	86,3%

207,00	0,14	0,01	10,05	95,3%	20,28	10,22	77,4	22,0	100,2%	86,0%	86,2%
208,00	0,14	0,01	9,92	97,8%	20,28	10,36	77,5	22,1	100,2%	86,0%	86,2%
209,00	0,14	0,01	9,94	97,5%	20,28	10,34	77,6	22,0	100,2%	86,0%	86,2%
210,00	0,14	0,01	9,88	98,5%	20,29	10,40	77,8	22,1	100,2%	86,0%	86,2%
211,00	0,09	0,01	9,80	100,1%	20,29	10,48	78,0	22,1	100,2%	85,9%	86,1%
212,00	0,09	0,01	9,62	103,9%	20,30	10,68	78,1	22,1	100,2%	85,9%	86,1%
213,00	0,09	0,01	9,66	103,2%	20,30	10,64	78,1	22,3	100,2%	85,9%	86,1%
214,00	0,09	0,01	9,54	105,6%	20,31	10,76	78,2	22,3	100,2%	85,8%	86,0%
215,00	0,09	0,01	9,39	109,0%	20,32	10,92	78,5	22,2	100,2%	85,7%	86,0%
216,00	0,09	0,01	9,34	110,0%	20,32	10,97	78,7	22,3	100,2%	85,7%	85,9%
217,00	0,09	0,01	9,26	111,9%	20,33	11,06	78,9	22,2	100,2%	85,7%	85,9%
218,00	0,09	0,01	9,18	113,8%	20,33	11,15	79,2	22,3	100,2%	85,6%	85,8%
219,00	0,09	0,01	9,08	116,1%	20,34	11,26	79,6	22,3	100,3%	85,6%	85,8%
220,00	0,05	0,01	9,18	113,8%	20,33	11,15	79,6	22,3	100,2%	85,6%	85,8%
221,00	0,05	0,01	9,29	111,2%	20,33	11,03	79,8	22,3	100,2%	85,6%	85,8%
222,00	0,05	0,01	9,37	109,3%	20,32	10,94	80,0	22,3	100,2%	85,6%	85,8%
223,00	0,05	0,01	9,39	108,9%	20,32	10,92	80,1	22,4	100,2%	85,6%	85,8%
224,00	0,05	0,01	9,42	108,2%	20,32	10,89	80,2	22,3	100,2%	85,6%	85,8%
225,00	0,05	0,01	9,52	106,0%	20,31	10,78	80,3	22,2	100,2%	85,7%	85,9%
226,00	0,05	0,01	9,54	105,7%	20,31	10,76	80,5	22,3	100,2%	85,7%	85,9%
227,00	0,05	0,01	9,62	103,9%	20,30	10,68	80,7	22,4	100,2%	85,7%	85,9%
228,00	0,05	0,01	9,67	102,9%	20,30	10,62	80,8	22,4	100,2%	85,7%	85,9%
229,00	0,00	0,01	9,64	103,6%	20,30	10,66	80,9	22,3	100,2%	85,7%	85,9%

APPENDIX 2: Proportionality results

	Outlet	Outlet	Average	Average	#1	#2		
Tunnel	Temp.	Temp.	100,52	101,13	System 1	System 2		SQRT
Velocity	Meter 1	Meter 2	**Proportional Rates**		Vol.Std.	Vol.Std.		Delta-P
			PR1	**PR2**			Time	
Ft/Sec	Deg. R	Deg. R	**%**	**%**	(ft3)	(ft3)	min	(in H2O)2
15,857	532,1	532,4			0,190	0,183	0	0,2449381
15,717	532,3	532,6	101,31	101,86	0,190	0,183	1	0,2478216
15,586	532,4	532,7	101,58	102,36	0,190	0,183	2	0,2463915
15,669	532,5	532,7	100,90	101,89	0,190	0,183	3	0,2478305
15,660	532,5	532,7	100,88	101,55	0,190	0,183	4	0,2478225
15,686	532,4	532,7	100,57	100,94	0,190	0,183	5	0,2488434
15,657	532,4	532,7	100,20	100,81	0,190	0,183	6	0,2488438
15,515	532,4	532,7	100,82	101,24	0,190	0,183	7	0,2467963
15,603	532,3	532,7	100,10	100,75	0,190	0,183	8	0,2484351
15,558	532,3	532,6	100,15	100,97	0,190	0,183	9	0,2478223
15,595	532,2	532,6	100,26	100,66	0,190	0,183	10	0,2484357
15,549	532,2	532,5	100,35	100,94	0,190	0,183	11	0,2478227
15,456	532,1	532,5	100,79	101,45	0,190	0,183	12	0,2463856
15,394	531,9	532,4	101,39	101,84	0,190	0,183	13	0,245354
15,691	531,8	532,3	99,59	100,17	0,190	0,183	14	0,2498609
15,544	531,8	532,3	100,55	101,25	0,190	0,183	15	0,2474804
15,601	531,8	532,2	100,09	100,98	0,190	0,183	16	0,2484352
15,608	531,7	532,2	100,32	100,89	0,190	0,183	17	0,2484355
15,550	531,7	532,2	100,62	101,29	0,190	0,183	18	0,247412
15,581	531,6	532,1	100,44	100,84	0,190	0,183	19	0,2478227
15,492	531,6	532,1	101,03	101,75	0,190	0,183	20	0,2463848
15,586	531,5	532,0	100,64	101,31	0,190	0,183	21	0,2477987
15,625	531,5	532,0	100,47	101,07	0,190	0,183	22	0,2484353
15,570	531,5	532,0	100,91	101,53	0,190	0,183	23	0,2474117
15,509	531,4	531,9	101,32	101,90	0,190	0,183	24	0,2463851
15,572	531,4	531,9	100,85	101,48	0,190	0,183	25	0,2474121
15,537	531,4	531,9	101,10	101,64	0,190	0,183	26	0,2467785
15,607	531,4	531,9	100,80	101,37	0,190	0,183	27	0,2478222
15,513	531,3	531,8	101,33	101,97	0,190	0,183	28	0,2463849
15,583	531,3	531,8	100,96	101,31	0,190	0,183	29	0,2474113
15,483	531,3	531,7	101,54	102,31	0,190	0,183	30	0,2457657
15,615	531,3	531,7	100,82	101,37	0,190	0,183	31	0,2478219
15,554	531,3	531,7	101,28	101,86	0,190	0,183	32	0,2467952
15,620	531,3	531,7	100,84	101,62	0,190	0,183	33	0,2478222
15,557	531,3	531,7	101,14	101,74	0,190	0,183	34	0,2467952
15,561	531,3	531,7	101,37	101,84	0,190	0,183	35	0,2467962
15,561	531,4	531,7	101,15	101,72	0,190	0,183	36	0,2467953
15,582	531,6	531,8	101,43	101,97	0,190	0,183	37	0,246795
15,573	531,8	532,0	101,48	102,19	0,190	0,183	38	0,2463843
15,656	532,1	532,2	101,20	101,77	0,190	0,183	39	0,2474667
15,692	532,3	532,4	100,99	101,86	0,190	0,183	40	0,247822
15,697	532,5	532,5	101,05	101,80	0,189	0,183	41	0,2478224
15,693	532,8	532,7	100,97	101,65	0,189	0,183	42	0,2478224
15,686	532,9	532,9	100,97	101,72	0,189	0,183	43	0,2478226
15,650	533,0	533,0	101,09	101,88	0,190	0,183	44	0,247413
15,611	533,0	533,0	101,42	101,88	0,190	0,183	45	0,2467968
15,643	533,0	533,1	101,19	101,46	0,190	0,183	46	0,2474136
15,599	533,0	533,1	101,37	101,92	0,190	0,183	47	0,2467974
15,632	532,9	533,1	100,96	101,56	0,190	0,183	48	0,2474141
15,697	532,9	533,1	100,45	101,41	0,189	0,183	49	0,2484364
15,658	532,9	533,1	101,01	101,58	0,190	0,183	50	0,2478239
15,522	532,8	533,1	101,69	102,28	0,190	0,183	51	0,2457669
15,471	532,8	533,0	102,18	103,06	0,190	0,183	52	0,2449417
15,466	532,7	533,0	101,81	102,61	0,190	0,183	53	0,24494
15,464	532,7	532,9	102,02	102,57	0,190	0,183	54	0,2449396
15,556	532,6	532,9	101,48	102,00	0,190	0,183	55	0,2463862

15,515	532,6	532,9	101,76	102,44	0,190	0,183	56	0,2457669
15,512	532,5	532,8	101,83	102,58	0,190	0,183	57	0,2457669
15,553	532,5	532,8	101,52	101,94	0,190	0,183	58	0,2463857
15,473	532,5	532,8	101,67	102,41	0,190	0,183	59	0,2453539
15,293	532,5	532,8	103,03	103,58	0,190	0,183	60	0,2424461
15,447	532,5	532,7	101,97	102,59	0,190	0,183	61	0,24494
15,384	532,4	532,7	102,54	103,10	0,190	0,183	62	0,2439009
15,499	532,4	532,7	101,63	102,58	0,190	0,183	63	0,2457668
15,447	532,3	532,7	102,11	102,77	0,190	0,184	64	0,2449397
15,441	532,3	532,6	102,04	102,51	0,190	0,183	65	0,244939
15,400	532,3	532,6	102,22	102,67	0,190	0,183	66	0,2443171
15,432	532,3	532,6	101,86	102,52	0,190	0,183	67	0,2449389
15,363	532,3	532,6	102,28	102,83	0,190	0,183	68	0,2439015
15,385	532,3	532,6	102,08	102,73	0,190	0,183	69	0,2443171
15,467	532,2	532,6	101,33	102,14	0,190	0,183	70	0,2457319
15,445	532,2	532,5	101,56	102,41	0,190	0,183	71	0,245353
15,511	532,2	532,5	101,18	101,86	0,190	0,183	72	0,2464776
15,273	532,1	532,4	102,58	103,25	0,190	0,183	73	0,2428597
15,453	532,1	532,4	101,32	101,91	0,190	0,183	74	0,2457653
15,447	532,0	532,3	101,37	101,95	0,190	0,183	75	0,2457653
15,506	532,0	532,3	100,84	101,61	0,190	0,183	76	0,2467944
15,508	532,0	532,3	100,97	101,51	0,190	0,183	77	0,2467958
15,506	532,0	532,3	100,85	101,43	0,190	0,183	78	0,2468826
15,429	532,1	532,3	101,55	102,16	0,190	0,183	79	0,2453537
15,449	532,3	532,5	101,65	102,08	0,190	0,183	80	0,2453525
15,458	532,5	532,6	101,52	102,23	0,190	0,183	81	0,2453526
15,595	532,8	532,8	100,76	101,13	0,190	0,183	82	0,2474112
15,534	533,0	533,0	101,07	102,07	0,189	0,183	83	0,2463843
15,618	533,2	533,2	100,55	101,24	0,189	0,183	84	0,2478221
15,606	533,3	533,3	100,41	101,05	0,189	0,183	85	0,2478218
15,633	533,4	533,4	100,07	100,81	0,189	0,183	86	0,2484352
15,587	533,4	533,5	100,32	101,12	0,189	0,183	87	0,2478224
15,517	533,4	533,5	100,70	101,26	0,189	0,183	88	0,2467959
15,638	533,3	533,5	99,81	100,63	0,189	0,183	89	0,2488443
15,572	533,3	533,5	100,17	100,84	0,189	0,183	90	0,247823
15,538	533,3	533,5	100,49	101,10	0,190	0,183	91	0,2474129
15,535	533,2	533,5	100,36	101,06	0,190	0,183	92	0,2474126
15,530	533,1	533,4	100,28	100,88	0,190	0,183	93	0,2474121
15,550	533,1	533,4	100,04	100,72	0,189	0,183	94	0,247823
15,332	533,0	533,4	101,48	102,12	0,189	0,183	95	0,2443177
15,453	532,9	533,3	100,65	101,32	0,189	0,183	96	0,2463861
15,514	532,8	533,2	100,29	100,79	0,190	0,183	97	0,2474127
15,515	532,7	533,2	100,40	100,90	0,190	0,183	98	0,2474125
15,574	532,6	533,1	99,73	100,55	0,190	0,183	99	0,2484356
15,440	532,6	533,1	100,62	101,18	0,190	0,183	100	0,2463863
15,469	532,6	533,0	100,73	101,15	0,190	0,183	101	0,2467962
15,504	532,5	533,0	100,28	100,91	0,190	0,183	102	0,2474119
15,462	532,5	533,0	100,41	101,27	0,190	0,183	103	0,2467966
15,433	532,5	532,9	100,75	101,29	0,190	0,183	104	0,2463855
15,434	532,4	532,9	100,82	101,30	0,190	0,183	105	0,2463851
15,496	532,4	532,8	100,43	101,08	0,190	0,183	106	0,2474116
15,494	532,3	532,8	100,36	101,00	0,190	0,183	107	0,2474121
15,553	532,2	532,7	99,87	100,42	0,190	0,183	108	0,2484355
15,449	532,2	532,6	100,53	100,95	0,190	0,183	109	0,2467958
15,385	532,1	532,6	100,88	101,56	0,190	0,183	110	0,245767
15,449	532,0	532,5	100,49	101,12	0,190	0,183	111	0,2467958
15,421	532,0	532,5	100,52	101,10	0,190	0,183	112	0,2463847
15,483	532,0	532,5	100,32	100,90	0,190	0,183	113	0,2474117
15,546	532,0	532,4	99,88	100,48	0,190	0,183	114	0,2484353
15,445	531,9	532,4	100,46	101,00	0,190	0,183	115	0,2467956
15,420	531,9	532,4	100,68	101,43	0,190	0,183	116	0,2463856

15,411	531,8	532,3	100,63	101,31	0,190	0,183	117	0,2463845
15,322	531,8	532,3	101,23	101,79	0,190	0,183	118	0,2449378
15,479	531,8	532,3	100,22	100,89	0,190	0,183	119	0,2474112
15,468	531,8	532,3	100,30	100,79	0,190	0,183	120	0,2474107
15,504	531,8	532,3	100,25	100,61	0,190	0,183	121	0,2478213
15,498	531,8	532,3	100,05	100,57	0,190	0,183	122	0,2478214
15,498	531,8	532,3	100,07	100,73	0,190	0,183	123	0,2478214
15,408	531,8	532,3	100,58	101,05	0,190	0,183	124	0,2463814
15,476	531,8	532,3	100,30	100,80	0,190	0,183	125	0,2474108
15,474	531,8	532,3	100,32	100,82	0,190	0,183	126	0,247411
15,367	531,7	532,2	100,70	101,62	0,190	0,183	127	0,2457655
15,436	531,7	532,3	100,36	101,01	0,190	0,183	128	0,2467951
15,409	531,7	532,2	100,56	100,96	0,190	0,183	129	0,2463844
15,438	531,7	532,2	100,42	100,92	0,190	0,183	130	0,2467945
15,564	531,7	532,2	99,72	100,20	0,190	0,183	131	0,2488422
15,471	531,7	532,2	100,35	100,82	0,190	0,183	132	0,2474107
15,405	531,7	532,2	100,49	101,02	0,190	0,183	133	0,2463835
15,534	531,7	532,2	99,95	100,36	0,190	0,183	134	0,2484339
15,534	531,6	532,2	99,88	100,25	0,190	0,183	135	0,2484344
15,431	531,6	532,1	100,54	100,81	0,190	0,183	136	0,2467946
15,406	531,5	532,1	100,60	101,33	0,190	0,183	137	0,2463838
15,469	531,5	532,1	100,26	100,76	0,190	0,183	138	0,2474105
15,533	531,5	532,1	99,90	100,40	0,190	0,183	139	0,2484346
15,401	531,5	532,1	100,52	101,27	0,190	0,183	140	0,2463835
15,492	531,5	532,1	100,03	100,79	0,190	0,183	141	0,2478209
15,491	531,4	532,0	99,98	100,65	0,190	0,183	142	0,2478211
15,468	531,4	532,0	100,25	100,78	0,190	0,183	143	0,2474107
15,526	531,4	532,0	99,67	100,35	0,190	0,183	144	0,2484339
15,554	531,4	532,0	99,62	100,32	0,190	0,183	145	0,2488422
15,492	531,4	532,0	99,95	100,66	0,190	0,183	146	0,2478213
15,528	531,4	532,0	99,80	100,37	0,190	0,183	147	0,2484341
15,553	531,3	531,9	99,57	100,20	0,190	0,183	148	0,2488428
15,484	531,3	531,9	99,95	100,54	0,190	0,183	149	0,2478211
15,459	531,3	531,9	100,26	100,63	0,190	0,183	150	0,2474105
15,488	531,3	531,9	100,08	100,44	0,190	0,183	151	0,2478202
15,488	531,3	531,9	99,97	100,58	0,190	0,183	152	0,2478206
15,462	531,3	531,9	100,09	100,91	0,190	0,183	153	0,2474108
15,461	531,2	531,8	100,09	100,64	0,190	0,183	154	0,2474098
15,396	531,1	531,8	100,57	101,31	0,190	0,183	155	0,2463811
15,547	531,1	531,7	99,62	100,35	0,190	0,184	156	0,2488419
15,459	531,1	531,7	100,22	100,84	0,190	0,184	157	0,2474106
15,548	531,1	531,7	99,64	100,31	0,190	0,183	158	0,2488422
15,456	531,1	531,7	100,09	100,80	0,190	0,183	159	0,2474102
15,352	531,1	531,7	100,89	101,37	0,190	0,183	160	0,2457639
15,417	531,1	531,7	100,40	101,14	0,190	0,183	161	0,2467939
15,545	531,1	531,7	99,53	100,38	0,190	0,184	162	0,2488418
15,483	531,1	531,7	100,00	100,66	0,190	0,184	163	0,2478202
15,454	531,1	531,7	100,19	100,77	0,190	0,183	164	0,2474095
15,545	531,1	531,7	99,58	100,12	0,190	0,183	165	0,2488413
15,517	531,1	531,7	99,71	100,44	0,190	0,183	166	0,2484335
15,478	531,1	531,7	99,97	100,68	0,190	0,184	167	0,2478203
15,670	531,0	531,7	98,79	99,30	0,190	0,183	168	0,2508721
15,515	531,0	531,7	99,76	100,26	0,190	0,183	169	0,2484334
15,541	531,0	531,6	99,74	100,08	0,190	0,183	170	0,2488416
15,543	531,0	531,6	99,71	100,46	0,190	0,184	171	0,2488417
15,517	531,0	531,6	99,89	100,36	0,190	0,184	172	0,2484328
15,505	531,0	531,6	99,78	100,14	0,190	0,183	173	0,248433
15,448	531,0	531,6	100,10	100,87	0,190	0,183	174	0,2474095
15,475	531,0	531,6	100,01	100,53	0,190	0,183	175	0,24782
15,605	531,0	531,6	99,17	99,71	0,190	0,183	176	0,2498584
15,603	530,9	531,5	99,25	99,78	0,190	0,183	177	0,2498588

15,602	530,9	531,5	99,07	99,79	0,190	0,183	178	0,2498582
15,598	530,8	531,5	99,19	99,83	0,190	0,184	179	0,2498586
15,474	530,8	531,5	100,01	100,57	0,190	0,183	180	0,2478201
15,537	530,8	531,5	99,56	100,34	0,190	0,184	181	0,2488412
15,626	530,8	531,5	98,95	99,56	0,190	0,184	182	0,250264
15,510	530,9	531,5	99,61	100,26	0,190	0,183	183	0,248433
15,472	530,8	531,4	99,99	100,73	0,190	0,184	184	0,247825
15,447	530,8	531,4	100,27	100,54	0,190	0,183	185	0,2474096
15,409	530,8	531,4	100,57	101,03	0,191	0,183	186	0,2467938
15,446	530,8	531,4	100,02	100,79	0,190	0,183	187	0,2474094
15,509	530,8	531,4	99,73	100,42	0,190	0,184	188	0,2484327
15,512	530,8	531,4	99,86	100,34	0,190	0,184	189	0,2484327
15,475	530,7	531,4	100,10	100,68	0,190	0,183	190	0,2478194
15,509	530,7	531,3	99,62	100,27	0,190	0,183	191	0,2484322
15,534	530,7	531,3	99,58	99,93	0,190	0,183	192	0,2488413
15,511	530,7	531,3	99,75	100,20	0,190	0,183	193	0,2484327
15,514	530,7	531,3	99,78	100,34	0,190	0,183	194	0,2484323
15,506	530,7	531,3	99,61	100,40	0,190	0,183	195	0,2484323
15,535	530,7	531,3	99,61	100,31	0,190	0,184	196	0,2488409
15,536	530,7	531,3	99,67	100,17	0,190	0,184	197	0,2488406
15,508	530,6	531,2	99,74	100,40	0,190	0,184	198	0,2484325
15,532	530,6	531,2	99,63	100,24	0,190	0,184	199	0,248841
15,471	530,6	531,2	100,09	100,62	0,190	0,184	200	0,2478192
15,596	530,6	531,2	99,26	99,82	0,190	0,184	201	0,2498577
15,505	530,6	531,1	99,79	100,40	0,190	0,184	202	0,2484319
15,595	530,6	531,1	99,24	99,89	0,190	0,184	203	0,2498569
15,608	530,7	531,2	99,29	99,90	0,190	0,184	204	0,249858
15,494	530,8	531,3	100,08	100,73	0,190	0,184	205	0,2478193
15,572	531,0	531,4	99,94	100,45	0,190	0,183	206	0,248841
15,586	531,1	531,5	100,03	100,53	0,190	0,183	207	0,2488408
15,647	531,3	531,7	99,35	99,97	0,190	0,183	208	0,2498573
15,547	531,5	531,8	99,76	100,66	0,190	0,183	209	0,2484324

	Outlet	Outlet	Average	Average	#1	#2		
Tunnel	Temp.	Temp.	100,02	101,02	System 1	System 2		SQRT
Velocity	Meter 1	Meter 2	**Proportional Rates**		Vol.Std.	Vol.Std.		Delta-P
			PR1	**PR2**			Time	
Ft/Sec	Deg. R	Deg. R	**%**	**%**	(ft3)	(ft3)	min	(in H2O)2
15,613	532,6	532,8			0,191	0,184	0	0,2388568
15,309	532,6	532,8	100,89	101,89	0,191	0,184	1	0,2388574
15,165	532,6	532,8	101,11	102,26	0,191	0,184	2	0,237366
15,325	532,7	532,8	99,86	100,77	0,191	0,184	3	0,2403395
15,289	532,7	532,8	99,92	100,95	0,191	0,184	4	0,2399156
15,383	532,6	532,7	99,27	100,47	0,191	0,184	5	0,241392
15,325	532,6	532,7	99,93	100,99	0,191	0,184	6	0,2403392
15,270	532,6	532,7	100,33	101,60	0,191	0,184	7	0,239281
15,324	532,6	532,7	99,99	101,20	0,191	0,184	8	0,2399156
15,360	532,5	532,7	99,97	101,09	0,191	0,184	9	0,2403388
15,385	532,5	532,7	99,70	100,69	0,191	0,184	10	0,2407601
15,347	532,6	532,7	100,37	101,47	0,191	0,184	11	0,2399157
15,276	532,6	532,7	100,76	101,74	0,191	0,184	12	0,2387153
15,411	532,5	532,7	100,07	100,89	0,191	0,184	13	0,2407601
15,321	532,5	532,7	100,54	101,72	0,191	0,184	14	0,2392801
15,318	532,5	532,7	100,59	101,77	0,191	0,184	15	0,2392811
15,386	532,6	532,7	100,28	101,06	0,191	0,184	16	0,2403385
15,421	532,5	532,7	100,02	101,00	0,191	0,184	17	0,2407604
15,363	532,5	532,7	100,48	101,18	0,191	0,184	18	0,2399154
15,398	532,5	532,7	100,29	101,36	0,191	0,184	19	0,2403386
15,215	532,6	532,7	101,45	102,71	0,191	0,184	20	0,2373656
15,338	532,6	532,7	100,66	101,86	0,191	0,184	21	0,2392808
15,387	532,6	532,7	100,67	101,76	0,191	0,184	22	0,2399162
15,380	532,6	532,8	100,48	101,40	0,191	0,184	23	0,2398875
15,434	532,6	532,7	100,10	101,09	0,191	0,184	24	0,2407597
15,346	532,6	532,8	100,71	101,87	0,191	0,184	25	0,2392802
15,349	532,7	532,8	100,71	101,85	0,191	0,184	26	0,2392889
15,326	532,7	532,8	100,85	102,08	0,190	0,184	27	0,2388564
15,359	532,8	532,9	100,90	101,82	0,191	0,184	28	0,2392808
15,338	532,9	532,9	101,07	102,23	0,191	0,184	29	0,238857
15,363	532,9	533,0	100,92	101,99	0,191	0,184	30	0,2392808
15,248	533,0	533,0	101,79	102,70	0,191	0,184	31	0,2373652
15,346	533,0	533,0	101,14	102,08	0,191	0,184	32	0,2388572
15,203	533,0	533,0	101,84	102,94	0,191	0,184	33	0,2367231
15,206	533,0	533,1	102,12	103,03	0,191	0,184	34	0,2367224
15,211	533,1	533,1	102,02	102,96	0,191	0,184	35	0,2367227
15,344	533,1	533,1	101,19	102,08	0,191	0,184	36	0,238856
15,333	533,2	533,1	101,00	102,16	0,191	0,184	37	0,238856
15,399	533,2	533,2	100,57	101,66	0,191	0,184	38	0,239915
15,188	533,2	533,2	101,84	102,92	0,191	0,184	39	0,2367234
15,381	533,3	533,2	100,54	101,54	0,191	0,184	40	0,2397705
15,340	533,3	533,3	100,52	101,69	0,190	0,184	41	0,2392814
15,344	533,3	533,3	100,72	101,80	0,190	0,184	42	0,2392798
15,313	533,3	533,3	100,94	102,18	0,191	0,184	43	0,2388561
15,178	533,3	533,3	101,74	102,98	0,191	0,184	44	0,2367227
15,312	533,3	533,3	100,84	101,99	0,191	0,184	45	0,2388562
15,311	533,3	533,3	100,79	101,60	0,190	0,184	46	0,2388562
15,293	533,3	533,3	100,69	101,94	0,190	0,184	47	0,2387543
15,170	533,3	533,3	101,77	102,84	0,190	0,184	48	0,2367227
15,376	533,3	533,3	100,50	101,27	0,191	0,184	49	0,2399151
15,368	533,3	533,3	100,27	101,34	0,191	0,184	50	0,2399157
15,302	533,4	533,3	100,73	101,83	0,190	0,184	51	0,2388564
15,296	533,4	533,4	100,74	101,62	0,191	0,184	52	0,2388566
15,064	533,4	533,4	102,27	103,15	0,191	0,184	53	0,2353414
15,191	533,4	533,4	101,28	102,36	0,191	0,184	54	0,2373648
15,288	533,4	533,4	100,63	101,74	0,190	0,184	55	0,2388563

15,181	533,5	533,4	101,12	102,32	0,190	0,184	56	0,237365
15,339	533,4	533,5	100,19	101,17	0,190	0,184	57	0,2399148
15,323	533,4	533,4	100,08	101,07	0,191	0,184	58	0,2399156
15,273	533,4	533,5	100,17	101,25	0,191	0,184	59	0,2392803
15,242	533,3	533,4	100,34	101,37	0,190	0,184	60	0,2388559
15,328	533,3	533,4	99,56	100,71	0,190	0,184	61	0,2403384
15,026	533,3	533,4	101,83	102,67	0,191	0,184	62	0,235649
15,233	533,3	533,4	100,20	101,34	0,191	0,184	63	0,2389261
15,251	533,4	533,4	100,07	101,14	0,190	0,184	64	0,2392802
15,076	533,4	533,4	101,12	101,94	0,191	0,184	65	0,2367225
15,301	533,3	533,4	99,53	100,38	0,191	0,184	66	0,240338
15,293	533,3	533,4	99,44	100,46	0,190	0,184	67	0,2403377
15,228	533,3	533,4	99,91	100,79	0,190	0,184	68	0,2392805
15,283	533,2	533,4	99,60	100,41	0,191	0,184	69	0,2403383
15,017	533,2	533,4	101,10	102,09	0,191	0,184	70	0,2362939
15,303	533,2	533,4	99,16	100,18	0,191	0,184	71	0,2407599
15,178	533,1	533,4	100,00	101,03	0,191	0,184	72	0,2388565
15,268	533,1	533,3	99,43	100,38	0,191	0,184	73	0,2403382
15,170	533,0	533,3	99,93	101,10	0,191	0,184	74	0,2388556
15,284	533,0	533,2	99,17	100,20	0,191	0,184	75	0,2407589
15,159	532,9	533,2	99,86	101,03	0,191	0,184	76	0,2388573
15,158	532,9	533,2	99,93	100,97	0,191	0,184	77	0,2388563
15,155	532,8	533,1	99,93	100,87	0,191	0,184	78	0,2388556
15,246	532,8	533,1	99,30	100,19	0,191	0,184	79	0,2403381
15,143	532,7	533,1	99,86	100,81	0,191	0,184	80	0,238856
15,204	532,7	533,0	99,35	100,41	0,191	0,184	81	0,2399149
15,166	532,7	533,0	99,59	100,62	0,191	0,184	82	0,2392802
15,209	532,7	533,0	99,45	100,38	0,191	0,184	83	0,2399146
15,259	532,7	533,0	98,87	100,04	0,191	0,184	84	0,2407593
15,203	532,6	533,0	99,38	100,48	0,191	0,184	85	0,2399146
15,199	532,6	533,0	99,38	100,34	0,191	0,184	86	0,2399147
15,222	532,6	532,9	99,12	100,13	0,191	0,184	87	0,2403377
15,291	532,5	532,9	98,80	99,88	0,191	0,184	88	0,241391
15,282	532,5	532,9	98,88	99,62	0,191	0,184	89	0,2413903
15,187	532,4	532,9	99,46	100,33	0,191	0,184	90	0,2399142
15,241	532,4	532,8	99,04	99,88	0,191	0,184	91	0,2407588
15,276	532,3	532,8	98,66	99,86	0,191	0,184	92	0,2413903
15,186	532,3	532,7	99,36	100,21	0,191	0,184	93	0,2399145
15,189	532,2	532,7	99,29	100,22	0,191	0,184	94	0,2399854
15,206	532,2	532,7	99,13	100,11	0,191	0,184	95	0,240337
15,110	532,3	532,7	99,68	100,68	0,191	0,184	96	0,2388557
15,228	532,3	532,7	98,89	99,87	0,191	0,184	97	0,2407587
15,228	532,3	532,7	99,06	99,98	0,191	0,184	98	0,2407583
15,267	532,2	532,6	98,77	99,52	0,191	0,184	99	0,2413908
15,266	532,2	532,6	98,65	99,67	0,191	0,184	100	0,2413904
15,213	532,2	532,6	99,00	99,69	0,191	0,184	101	0,2405371
15,171	532,1	532,5	99,30	100,22	0,191	0,184	102	0,2399139
15,262	532,1	532,5	98,67	99,54	0,191	0,184	103	0,2413903
15,259	532,0	532,5	98,74	99,60	0,191	0,184	104	0,2413867
15,220	532,0	532,5	98,95	99,84	0,191	0,184	105	0,2407586
15,217	532,0	532,5	99,14	99,83	0,191	0,184	106	0,2407582
15,254	532,0	532,5	98,72	99,50	0,191	0,184	107	0,2413908
15,190	531,9	532,4	99,09	100,02	0,191	0,184	108	0,240337
15,257	531,9	532,4	98,46	99,66	0,191	0,184	109	0,2413899
15,279	531,9	532,4	98,47	99,46	0,191	0,184	110	0,2418097
15,210	531,9	532,4	98,93	99,79	0,191	0,184	111	0,2407584
15,212	531,8	532,4	98,77	99,89	0,191	0,184	112	0,2407587
15,187	531,8	532,3	98,96	100,07	0,191	0,184	113	0,2403685
15,210	531,8	532,3	98,89	99,70	0,191	0,184	114	0,240758
15,156	531,8	532,3	99,13	100,15	0,191	0,184	115	0,2399141
15,249	531,8	532,3	98,67	99,37	0,191	0,184	116	0,2413895

15,207	531,7	532,3	98,92	99,76	0,191	0,184	117	0,2407582
15,203	531,7	532,3	98,79	99,74	0,191	0,184	118	0,2407578
15,201	531,7	532,2	98,96	99,67	0,191	0,184	119	0,2407584
15,177	531,7	532,2	99,04	99,94	0,191	0,184	120	0,2403465

	Outlet	Outlet	Average	Average	#1	#2		
Tunnel	Temp.	Temp.	99,40	100,28	System 1	System 2		SQRT
Velocity	Meter 1	Meter 2	**Proportional Rates**		Vol.Std.	Vol.Std.		Delta-P
			PR1	**PR2**			Time	
Ft/Sec	Deg. R	Deg. R	**%**	**%**	(ft3)	(ft3)	min	(in H2O)2
15,638	532,5	532,6			0,190	0,184	0	0,2428809
15,429	532,5	532,7	97,98	98,90	0,190	0,184	1	0,2424597
15,371	532,5	532,7	98,13	98,71	0,190	0,183	2	0,2418776
15,369	532,5	532,7	98,18	98,94	0,190	0,183	3	0,2418244
15,300	532,5	532,7	98,61	99,31	0,190	0,183	4	0,2407643
15,573	532,5	532,7	96,76	97,59	0,190	0,183	5	0,2451935
15,374	532,5	532,7	97,99	98,86	0,190	0,184	6	0,241921
15,448	532,5	532,7	97,87	98,76	0,190	0,184	7	0,2428821
15,561	532,4	532,6	97,89	98,49	0,190	0,184	8	0,243725
15,408	532,4	532,6	99,10	100,06	0,190	0,183	9	0,2407626
15,246	532,4	532,6	100,60	101,50	0,190	0,183	10	0,2377694
15,528	532,4	532,6	99,19	99,94	0,190	0,183	11	0,2418212
15,451	532,4	532,6	99,96	100,96	0,190	0,184	12	0,2403356
15,435	532,4	532,7	100,14	100,86	0,190	0,184	13	0,2398211
15,411	532,5	532,7	100,52	101,29	0,190	0,183	14	0,2392388
15,490	532,5	532,7	100,08	100,87	0,190	0,183	15	0,2403365
15,295	532,5	532,7	101,48	102,44	0,190	0,183	16	0,2371145
15,411	532,6	532,8	100,86	101,84	0,190	0,184	17	0,2388363
15,477	532,6	532,8	100,65	101,37	0,190	0,184	18	0,2396928
15,403	532,7	532,8	101,17	101,88	0,190	0,183	19	0,2384514
15,394	532,8	532,8	101,30	102,15	0,190	0,183	20	0,2382287
15,396	532,8	532,9	101,27	102,27	0,190	0,184	21	0,2381936
15,398	532,9	532,9	101,37	102,26	0,190	0,184	22	0,2381932
15,634	533,0	533,0	99,83	100,59	0,190	0,184	23	0,2418229
15,301	533,1	533,0	102,02	102,72	0,190	0,183	24	0,2366816
15,395	533,1	533,1	101,39	102,21	0,190	0,183	25	0,2380395
15,382	533,2	533,1	101,55	102,40	0,190	0,183	26	0,237785
15,499	533,2	533,1	100,67	101,51	0,190	0,183	27	0,2396943
15,386	533,3	533,2	101,30	102,52	0,190	0,184	28	0,2378655
15,335	533,3	533,2	101,75	102,74	0,190	0,184	29	0,2371035
15,337	533,4	533,3	101,57	102,62	0,190	0,183	30	0,2371152
15,509	533,4	533,3	100,69	101,69	0,190	0,183	31	0,2396945
15,543	533,5	533,4	100,32	101,42	0,190	0,184	32	0,2403384
15,304	533,6	533,4	101,81	102,89	0,190	0,184	33	0,2366801
15,372	533,6	533,4	101,31	102,49	0,190	0,184	34	0,2377618
15,445	533,6	533,5	100,79	101,44	0,190	0,183	35	0,2390211
15,485	533,7	533,5	100,47	101,58	0,190	0,183	36	0,2396925
15,540	533,8	533,6	100,06	101,07	0,190	0,184	37	0,2406385
15,362	533,8	533,6	101,22	102,00	0,190	0,183	38	0,2379473
15,610	533,9	533,7	99,41	100,29	0,190	0,183	39	0,2418239
15,506	533,9	533,7	100,01	101,07	0,190	0,183	40	0,2403352
15,293	534,0	533,8	101,44	102,31	0,190	0,183	41	0,2371139
15,247	534,0	533,8	101,30	102,44	0,190	0,183	42	0,2366815
15,551	534,0	533,8	99,41	100,35	0,190	0,183	43	0,241456
15,391	534,0	533,9	100,19	101,02	0,190	0,183	44	0,2391594
15,392	534,1	533,9	100,14	101,02	0,190	0,183	45	0,239264
15,397	534,1	533,9	100,15	100,97	0,190	0,183	46	0,2394571
15,442	534,1	533,9	99,59	100,47	0,190	0,183	47	0,240335
15,219	534,1	534,0	100,89	101,74	0,190	0,183	48	0,2371172
15,183	534,1	534,0	101,02	101,91	0,190	0,183	49	0,2366824
15,368	534,1	534,0	99,66	100,41	0,190	0,183	50	0,2396952
15,363	534,1	534,0	99,62	100,45	0,190	0,183	51	0,2396948
15,301	534,1	534,0	99,81	100,71	0,190	0,183	52	0,238839
15,499	534,1	534,0	98,52	99,36	0,190	0,183	53	0,2420936
15,290	534,1	534,0	99,83	100,71	0,190	0,183	54	0,2388386
15,276	534,1	534,0	99,65	100,54	0,190	0,183	55	0,2388364

15,393	534,1	534,0	98,90	99,93	0,190	0,183	56	0,2407631
15,356	534,0	534,0	99,08	100,08	0,190	0,183	57	0,2402861
15,440	534,1	534,0	98,46	99,12	0,190	0,183	58	0,2418249
15,339	534,0	534,0	98,98	99,77	0,190	0,183	59	0,2403374
15,325	534,0	534,0	99,24	99,97	0,190	0,183	60	0,2400916
15,430	534,0	534,0	98,44	99,34	0,190	0,183	61	0,2418237
15,334	534,0	534,0	99,03	99,96	0,190	0,184	62	0,2403367
15,290	533,9	534,0	99,21	100,29	0,190	0,184	63	0,239696
15,189	533,9	534,0	99,82	100,78	0,190	0,184	64	0,2381958
15,442	533,9	533,9	98,02	99,09	0,190	0,184	65	0,242249
15,539	533,9	534,0	97,43	98,33	0,190	0,183	66	0,2437266
15,440	533,9	533,9	98,22	99,16	0,190	0,183	67	0,242253
15,340	533,9	533,9	98,62	99,48	0,190	0,183	68	0,2407816
15,494	533,8	533,9	97,63	98,56	0,190	0,183	69	0,2433047
15,498	533,8	533,9	97,70	98,34	0,190	0,183	70	0,2433095
15,535	533,8	533,9	97,41	98,04	0,190	0,183	71	0,2439239
15,299	533,8	533,9	98,72	99,79	0,190	0,183	72	0,240337
15,487	533,8	533,9	97,69	98,54	0,190	0,184	73	0,2433054
15,264	533,8	533,9	99,01	99,93	0,190	0,184	74	0,239811
15,199	533,8	533,9	99,36	100,20	0,190	0,183	75	0,2388404
15,386	533,7	533,9	98,17	99,07	0,190	0,183	76	0,2418261
15,452	533,7	533,9	97,72	98,48	0,190	0,183	77	0,2428884
15,249	533,7	533,9	98,96	100,07	0,190	0,184	78	0,2396964
15,315	533,7	533,8	98,50	99,54	0,190	0,184	79	0,2407582
15,378	533,7	533,8	98,17	98,96	0,190	0,184	80	0,241825
15,403	533,7	533,8	97,89	98,70	0,190	0,183	81	0,2422484
15,278	533,6	533,8	98,88	99,60	0,190	0,183	82	0,240337
15,278	533,6	533,8	98,74	99,77	0,190	0,184	83	0,2403368
15,370	533,6	533,8	98,02	98,92	0,190	0,184	84	0,2418268
15,303	533,6	533,8	98,56	99,44	0,190	0,184	85	0,2407635
15,432	533,6	533,7	97,71	98,49	0,190	0,184	86	0,2428723
15,432	533,5	533,7	97,63	98,49	0,190	0,183	87	0,242883
15,508	533,5	533,7	97,03	97,92	0,190	0,183	88	0,2440853
15,349	533,5	533,7	98,19	99,06	0,190	0,183	89	0,2416057
15,389	533,5	533,7	97,91	98,63	0,190	0,183	90	0,2422484
15,293	533,5	533,7	98,48	99,20	0,190	0,183	91	0,2407637
15,426	533,5	533,6	97,59	98,54	0,190	0,183	92	0,2428834
15,260	533,5	533,6	98,42	99,39	0,190	0,184	93	0,2403368
15,448	533,5	533,6	97,42	98,11	0,190	0,183	94	0,2433116

	Outlet	Outlet	Average	Average	#1	#2		
Tunnel	Temp.	Temp.	99,74	100,50	System 1	System 2		SQRT
Velocity	Meter 1	Meter 2	**Proportional Rates**		Vol.Std.	Vol.Std.		Delta-P
			PR1	**PR2**			Time	
Ft/Sec	Deg. R	Deg. R	**%**	**%**	(ft3)	(ft3)	min	(in H2O)2
15,529	531,6	532,0			0,189	0,182	0	0,2443548
15,289	531,7	532,0	101,02	101,75	0,189	0,182	1	0,2428816
15,439	531,7	532,0	100,03	100,66	0,189	0,182	2	0,2451942
15,329	531,7	532,0	100,72	101,73	0,189	0,182	3	0,2433092
15,258	531,7	532,0	101,47	102,42	0,189	0,182	4	0,2418252
15,458	531,7	532,0	100,78	101,58	0,189	0,182	5	0,2443562
15,689	531,8	532,0	97,87	98,68	0,189	0,182	6	0,2497559
15,559	531,7	532,0	98,37	98,86	0,189	0,182	7	0,2482938
15,325	531,7	532,0	99,55	100,29	0,189	0,182	8	0,244776
15,227	531,6	531,9	99,98	100,81	0,189	0,182	9	0,2433056
15,446	531,7	532,0	98,63	99,55	0,188	0,182	10	0,2468043
15,227	531,6	531,9	100,03	100,88	0,189	0,182	11	0,2433053
15,295	531,6	531,9	99,73	100,18	0,189	0,182	12	0,2443571
15,567	531,6	532,0	97,86	98,78	0,189	0,182	13	0,2487237
15,229	531,6	532,0	100,10	100,81	0,189	0,182	14	0,2433089
15,421	531,6	532,0	99,08	99,51	0,189	0,182	15	0,2462357
15,321	531,6	532,0	99,97	100,57	0,189	0,182	16	0,2443577
15,455	531,6	532,0	99,25	100,02	0,189	0,182	17	0,2462365
15,440	531,6	532,0	99,55	100,14	0,189	0,182	18	0,2459143
15,201	531,6	532,0	100,79	101,52	0,189	0,182	19	0,2422463
15,364	531,7	532,0	99,90	100,76	0,189	0,182	20	0,2447749
15,425	531,7	532,0	99,41	100,19	0,189	0,182	21	0,245822
15,268	531,7	532,0	100,42	101,12	0,189	0,182	22	0,2434381
15,419	531,7	532,0	99,38	100,00	0,189	0,182	23	0,245797
15,387	531,8	532,0	99,61	100,20	0,189	0,182	24	0,2451951
15,360	531,8	532,1	99,73	100,52	0,189	0,182	25	0,2447621
15,164	531,8	532,1	101,00	101,85	0,189	0,182	26	0,2417315
15,390	531,8	532,1	99,78	100,45	0,189	0,182	27	0,2451946
15,300	531,8	532,1	100,29	101,06	0,189	0,182	28	0,2437251
15,537	531,9	532,1	98,88	99,49	0,189	0,182	29	0,247423
15,383	531,9	532,1	99,86	100,52	0,189	0,182	30	0,2448429
15,629	531,9	532,1	98,33	99,15	0,189	0,182	31	0,248723
15,296	531,9	532,1	100,66	101,24	0,189	0,182	32	0,2433065
15,369	531,9	532,1	100,25	100,92	0,189	0,182	33	0,2443571
15,327	531,9	532,2	100,37	101,00	0,189	0,182	34	0,2437272
15,396	532,0	532,2	100,13	100,84	0,189	0,182	35	0,2447812
15,402	532,0	532,2	99,97	100,92	0,189	0,182	36	0,244777
15,220	532,0	532,2	101,32	101,99	0,189	0,182	37	0,2419142
15,383	532,1	532,3	100,45	101,20	0,189	0,182	38	0,2443244
15,249	532,2	532,3	101,11	102,07	0,189	0,182	39	0,2422489
15,415	532,2	532,4	100,20	101,03	0,189	0,182	40	0,2447762
15,298	532,2	532,4	100,84	101,77	0,189	0,182	41	0,2428936
15,350	532,2	532,4	100,62	101,30	0,189	0,182	42	0,2437039
15,351	532,3	532,4	100,62	101,28	0,189	0,182	43	0,2437258
15,329	532,3	532,5	100,66	101,61	0,189	0,182	44	0,2433063
15,393	532,4	532,5	100,26	101,00	0,188	0,182	45	0,2443569
15,418	532,4	532,5	100,15	101,11	0,188	0,182	46	0,2446625
15,420	532,4	532,6	100,33	100,75	0,189	0,182	47	0,2447783
15,454	532,5	532,6	99,97	100,79	0,189	0,182	48	0,245194
15,486	532,5	532,6	99,51	100,51	0,188	0,182	49	0,2458215
15,353	532,6	532,7	100,52	101,30	0,188	0,182	50	0,2437186
15,295	532,6	532,7	100,68	101,54	0,188	0,182	51	0,2428821
15,322	532,6	532,7	100,60	101,37	0,188	0,182	52	0,2433063
15,267	532,6	532,7	100,98	101,75	0,188	0,182	53	0,242426
15,230	532,7	532,8	101,17	102,13	0,188	0,182	54	0,2418271
15,385	532,7	532,8	100,15	100,97	0,188	0,182	55	0,2443567

15,289	532,7	532,8	100,73	101,64	0,188	0,182	56	0,2428831
15,258	532,7	532,8	101,11	101,64	0,188	0,182	57	0,2422492
15,298	532,7	532,8	100,77	101,48	0,188	0,182	58	0,2428829
15,290	532,8	532,9	100,74	101,55	0,188	0,182	59	0,242883
15,153	532,8	532,9	101,47	102,21	0,188	0,182	60	0,2407435
15,460	532,8	532,9	99,66	100,41	0,188	0,182	61	0,2455675
15,344	532,9	532,9	100,25	101,20	0,188	0,182	62	0,2437264
15,313	532,9	533,0	100,51	101,18	0,188	0,182	63	0,2433056
15,496	532,9	533,0	99,60	100,11	0,189	0,182	64	0,2461792
15,221	532,9	533,0	101,13	101,95	0,189	0,182	65	0,2418259
15,055	532,9	533,0	102,15	102,97	0,188	0,182	66	0,2392648
15,280	532,9	533,0	100,67	101,34	0,188	0,182	67	0,2428829
15,231	533,0	533,0	100,82	101,95	0,188	0,182	68	0,2422497
15,366	533,0	533,0	99,89	101,09	0,188	0,182	69	0,2443415
15,321	533,0	533,0	100,13	101,18	0,188	0,182	70	0,2437197
15,192	533,0	533,0	100,86	101,84	0,188	0,182	71	0,2418256
15,363	533,0	533,1	99,63	100,50	0,188	0,182	72	0,2446452
15,207	533,0	533,1	100,72	101,40	0,188	0,182	73	0,242222
15,295	533,0	533,1	99,99	100,87	0,188	0,182	74	0,2437257
15,266	533,0	533,1	100,09	100,81	0,188	0,182	75	0,2433247
15,103	533,0	533,1	101,15	101,99	0,188	0,182	76	0,2407634
15,256	533,0	533,1	100,01	101,09	0,188	0,182	77	0,2433092
15,282	533,0	533,1	100,03	100,92	0,188	0,182	78	0,2437253
15,225	533,0	533,1	100,30	100,91	0,188	0,182	79	0,2428829
15,286	533,0	533,1	99,77	100,71	0,188	0,182	80	0,2438962
15,229	533,0	533,1	100,15	101,14	0,188	0,182	81	0,2429662
15,271	533,0	533,1	99,87	100,66	0,188	0,182	82	0,2437232
15,370	533,0	533,1	99,18	99,73	0,188	0,182	83	0,2454081
15,233	532,9	533,1	99,95	100,81	0,188	0,182	84	0,2432292
15,397	532,9	533,1	99,11	99,81	0,188	0,182	85	0,2458216
15,256	533,0	533,1	99,87	100,74	0,189	0,182	86	0,2437274
15,393	533,0	533,1	99,06	99,85	0,189	0,182	87	0,2458215
15,257	533,0	533,1	100,05	100,43	0,189	0,182	88	0,2437286
15,152	533,0	533,1	100,61	101,65	0,189	0,182	89	0,241987
15,005	533,0	533,2	101,56	102,31	0,188	0,182	90	0,2396964
15,231	533,0	533,2	100,00	100,98	0,188	0,182	91	0,2433052
15,228	533,0	533,2	99,93	100,89	0,188	0,182	92	0,2433064
15,269	533,0	533,2	99,52	100,25	0,188	0,182	93	0,243996
15,196	533,0	533,2	100,15	100,96	0,188	0,182	94	0,2428841
15,223	532,9	533,1	100,00	100,64	0,188	0,182	95	0,2433034
15,311	532,9	533,1	99,38	100,17	0,189	0,182	96	0,2447764
15,294	532,9	533,1	99,51	100,31	0,189	0,182	97	0,2444799
15,246	532,9	533,1	99,74	100,55	0,188	0,182	98	0,243726
15,031	532,9	533,1	101,17	102,06	0,188	0,182	99	0,2403374
15,236	532,9	533,1	99,68	100,39	0,188	0,182	100	0,2437266
15,280	532,8	533,1	99,50	100,16	0,188	0,182	101	0,244347
15,186	532,9	533,1	100,06	100,98	0,188	0,182	102	0,2428864
15,548	532,8	533,1	97,61	98,35	0,188	0,182	103	0,2487253
15,211	532,8	533,0	99,76	100,54	0,188	0,182	104	0,2433067
15,276	532,8	533,0	99,51	100,18	0,188	0,182	105	0,2443619
15,183	532,8	533,1	99,95	100,63	0,188	0,182	106	0,2429461
15,180	532,8	533,1	100,04	100,67	0,188	0,182	107	0,2428837
15,232	532,8	533,1	99,64	100,43	0,188	0,182	108	0,2437277
15,180	532,8	533,1	99,91	100,64	0,188	0,182	109	0,2429653
15,111	532,8	533,1	100,33	101,21	0,188	0,182	110	0,2418344
15,294	532,8	533,1	99,17	99,90	0,188	0,182	111	0,2447765
15,266	532,8	533,0	99,34	100,21	0,188	0,182	112	0,2443582
15,089	532,7	533,0	100,45	101,55	0,188	0,182	113	0,2415499
15,175	532,7	533,0	99,96	100,66	0,188	0,182	114	0,2428834
15,292	532,7	533,0	99,05	100,01	0,188	0,182	115	0,2447767
15,319	532,7	533,0	99,03	99,77	0,188	0,182	116	0,2451955

15,290	532,7	533,0	99,19	100,00	0,188	0,182	117	0,2447764
15,172	532,7	533,0	99,98	100,81	0,188	0,182	118	0,242884
15,223	532,7	533,0	99,62	100,30	0,188	0,182	119	0,2437272
15,265	532,7	533,0	99,35	100,08	0,188	0,182	120	0,2443571
15,316	532,7	533,0	98,99	99,69	0,188	0,182	121	0,2451962
15,260	532,7	533,0	99,30	99,89	0,188	0,181	122	0,2443382
15,469	532,7	533,0	98,03	98,83	0,188	0,182	123	0,2476904
15,259	532,7	533,0	99,29	99,86	0,188	0,182	124	0,2443593
15,146	532,7	533,0	99,96	100,99	0,188	0,182	125	0,2425323
15,194	532,7	533,0	99,86	100,38	0,188	0,182	126	0,2433093
15,309	532,7	533,0	98,90	99,59	0,188	0,182	127	0,2451963
15,377	532,7	533,0	98,52	99,16	0,188	0,182	128	0,2462386
15,256	532,7	533,0	99,31	100,08	0,188	0,182	129	0,2443573
15,370	532,7	533,0	98,60	99,38	0,188	0,182	130	0,2461841
15,259	532,7	533,0	99,38	100,11	0,189	0,182	131	0,2443584
15,257	532,7	533,0	99,30	100,35	0,188	0,182	132	0,2443581
15,284	532,7	533,0	99,25	100,14	0,188	0,182	133	0,2447769
15,222	532,7	533,0	99,55	100,37	0,189	0,182	134	0,2437768
15,216	532,7	533,0	99,51	100,45	0,188	0,182	135	0,2437246
15,003	532,7	533,0	101,02	101,67	0,188	0,182	136	0,2403363
15,252	532,7	533,0	99,31	99,89	0,188	0,182	137	0,2443579
15,460	532,7	533,0	97,99	98,81	0,188	0,182	138	0,2476894
15,345	532,7	533,0	98,72	99,48	0,188	0,182	139	0,2458208
15,162	532,7	533,0	99,77	100,83	0,188	0,182	140	0,242885
15,157	532,7	533,0	99,89	100,74	0,188	0,182	141	0,2428843
15,019	532,7	533,0	100,72	101,62	0,188	0,182	142	0,2406778
15,299	532,7	533,0	98,88	99,74	0,188	0,182	143	0,2451931
15,248	532,7	533,0	99,27	100,00	0,188	0,182	144	0,2443587
15,210	532,7	533,0	99,48	100,29	0,188	0,182	145	0,2437759
15,120	532,7	533,0	100,09	100,90	0,188	0,182	146	0,2422824
15,091	532,7	533,0	100,35	101,06	0,188	0,182	147	0,2418271
15,252	532,7	533,0	99,34	100,15	0,189	0,182	148	0,2443585
15,245	532,7	533,0	99,38	100,21	0,189	0,182	149	0,2443016
15,367	532,7	533,0	98,43	99,23	0,188	0,182	150	0,2462381
15,456	532,7	533,0	97,97	98,67	0,188	0,182	151	0,2476862
15,295	532,7	533,0	98,74	99,51	0,188	0,182	152	0,2451958
15,339	532,6	533,0	98,64	99,31	0,188	0,182	153	0,2458231
15,151	532,6	533,0	99,86	100,86	0,188	0,182	154	0,2428802
15,208	532,7	533,0	99,48	100,24	0,188	0,182	155	0,2437275
15,361	532,7	533,0	98,50	99,00	0,188	0,182	156	0,2462278
15,335	532,7	533,0	98,59	99,30	0,188	0,181	157	0,2458053
15,178	532,7	533,0	99,56	100,30	0,188	0,182	158	0,2433039
15,208	532,7	533,0	99,39	100,21	0,188	0,182	159	0,2437341
15,456	532,7	533,0	97,97	98,65	0,188	0,182	160	0,2476916
15,300	532,7	533,1	98,98	99,59	0,189	0,182	161	0,2451912
15,183	532,7	533,1	99,53	100,46	0,188	0,182	162	0,2433848
15,300	532,7	533,1	98,97	99,55	0,188	0,182	163	0,2452001
15,336	532,8	533,1	98,65	99,13	0,188	0,181	164	0,2458235
15,194	532,8	533,1	99,76	100,40	0,189	0,182	165	0,2434988
15,259	532,7	533,1	99,23	99,85	0,189	0,182	166	0,2445581
15,183	532,7	533,1	99,77	100,60	0,189	0,182	167	0,2433084
15,332	532,8	533,1	98,65	99,24	0,189	0,182	168	0,2458217
15,335	532,8	533,1	98,50	99,12	0,188	0,181	169	0,245824
15,329	532,8	533,1	98,57	99,30	0,188	0,181	170	0,2457498
15,243	532,8	533,1	99,22	99,73	0,188	0,181	171	0,2443587
15,199	532,8	533,1	99,42	100,17	0,188	0,182	172	0,2437277
15,332	532,8	533,1	98,65	99,31	0,188	0,182	173	0,2458025
15,236	532,7	533,1	99,26	100,01	0,188	0,182	174	0,2442748
15,242	532,8	533,1	99,21	99,83	0,188	0,182	175	0,244358
15,332	532,7	533,1	98,75	99,31	0,189	0,182	176	0,2458222
15,292	532,7	533,1	98,99	99,62	0,189	0,182	177	0,245196

15,315	532,7	533,1	98,65	99,40	0,188	0,182	178	0,2455454
15,446	532,7	533,1	97,84	98,71	0,188	0,182	179	0,2476916
15,488	532,7	533,1	97,71	98,46	0,188	0,182	180	0,2483097

Average	Average	Average						Average
15,61	Inlet +	Inlet +						0,250
	Outlet	Outlet	Average	Average	#1	#2		
Tunnel	Temp.	Temp.	99,81	100,24	System 1	System 2		SQRT
Velocity	Meter 1	Meter 2	**Proportional Rates**		Vol.Std.	Vol.Std.		Delta-P
			PR1	**PR2**			Time	
Ft/Sec	Deg. R	Deg. R	**%**	**%**	(ft3)	(ft3)	min	(in H2O)2
15,824	530,6	531,1			0,190	0,183	0	0,2509623
15,591	530,6	531,1	100,82	100,98	0,190	0,183	1	0,2487573
15,534	530,6	531,1	101,37	101,52	0,190	0,183	2	0,2476955
15,707	530,7	531,1	100,28	100,85	0,190	0,183	3	0,2501662
15,662	530,7	531,1	101,33	101,65	0,190	0,183	4	0,2487271
15,697	530,9	531,2	99,72	100,05	0,190	0,183	5	0,2507798
15,776	531,1	531,3	99,03	99,41	0,190	0,183	6	0,252208
15,492	531,3	531,4	100,63	101,47	0,189	0,183	7	0,2476964
15,562	531,5	531,5	100,50	100,82	0,189	0,183	8	0,2487284
15,504	531,7	531,7	100,80	101,28	0,189	0,183	9	0,2476951
15,579	531,9	531,8	100,55	100,88	0,189	0,183	10	0,2487324
15,727	532,0	531,9	99,56	99,96	0,190	0,183	11	0,2511907
15,549	532,1	532,0	100,58	101,04	0,189	0,183	12	0,2483163
15,735	532,1	532,1	99,58	99,81	0,189	0,183	13	0,2511523
15,658	532,2	532,2	100,05	100,54	0,189	0,183	14	0,2497511
15,592	532,2	532,2	100,54	100,93	0,189	0,183	15	0,2487288
15,723	532,1	532,2	99,51	99,97	0,189	0,182	16	0,2507829
15,773	532,1	532,2	99,22	99,82	0,189	0,182	17	0,2515993
15,607	532,0	532,2	100,54	101,14	0,189	0,183	18	0,2487389
15,676	532,0	532,1	100,31	100,53	0,189	0,183	19	0,2497575
15,890	531,9	532,1	98,79	99,13	0,189	0,182	20	0,2532184
15,890	531,8	532,0	98,93	99,33	0,189	0,183	21	0,2532331
15,584	531,7	532,0	100,85	101,21	0,189	0,183	22	0,2483183
15,588	531,7	532,0	100,86	101,22	0,189	0,183	23	0,2483792
15,615	531,7	531,9	100,80	101,30	0,189	0,183	24	0,2487282
15,866	531,6	531,9	99,27	99,58	0,189	0,183	25	0,2525879
15,909	531,6	531,8	99,06	99,56	0,189	0,183	26	0,2532237
15,690	531,6	531,8	100,51	100,65	0,190	0,183	27	0,2497564
15,751	531,6	531,8	99,98	100,46	0,190	0,183	28	0,250782
15,731	531,6	531,8	100,21	100,64	0,189	0,183	29	0,2503938
15,632	531,6	531,8	100,96	101,35	0,190	0,183	30	0,2487545
15,635	531,6	531,8	100,91	101,29	0,190	0,183	31	0,2487313
15,887	531,7	531,8	99,32	99,67	0,189	0,183	32	0,2526898
15,770	531,7	531,8	100,23	100,70	0,190	0,183	33	0,2507237
15,702	531,7	531,8	100,50	101,06	0,190	0,183	34	0,2497562
15,611	531,7	531,8	101,09	101,69	0,189	0,183	35	0,2483158
15,776	531,7	531,8	100,20	100,47	0,190	0,183	36	0,2508188
15,703	531,7	531,8	100,62	101,21	0,190	0,183	37	0,2496774
15,738	531,7	531,8	100,37	101,03	0,189	0,183	38	0,2501671
15,619	531,7	531,8	101,21	101,71	0,190	0,183	39	0,2483161
15,719	531,8	531,8	100,49	100,83	0,189	0,183	40	0,2497569
15,707	531,8	531,9	100,59	101,06	0,189	0,183	41	0,2496377
15,831	531,8	531,9	99,87	100,36	0,189	0,183	42	0,2515913
15,714	531,9	531,9	100,61	101,04	0,189	0,183	43	0,2497557
15,647	531,9	531,9	100,98	101,39	0,189	0,183	44	0,2487278
15,421	532,0	532,0	102,31	102,77	0,189	0,183	45	0,2451978
15,771	532,0	532,0	100,01	100,43	0,189	0,183	46	0,2507791
15,473	532,0	532,0	102,10	102,47	0,189	0,183	47	0,2460841
15,421	532,0	532,0	102,28	102,88	0,189	0,183	48	0,2451982
15,367	532,0	532,0	102,65	103,03	0,189	0,183	49	0,2443602
15,365	532,0	532,1	102,65	103,04	0,189	0,183	50	0,2443614
15,611	531,9	532,0	101,04	101,43	0,189	0,183	51	0,2483151
15,479	532,0	532,0	101,75	102,29	0,189	0,183	52	0,2462413
15,567	532,1	532,1	101,19	101,80	0,189	0,183	53	0,2477009

15,630	532,1	532,1	100,76	101,25	0,189	0,183	54	0,2487276
15,688	532,2	532,1	100,33	100,82	0,189	0,183	55	0,249755
15,347	532,2	532,2	102,43	103,17	0,189	0,183	56	0,2443834
15,367	532,2	532,1	102,34	102,83	0,189	0,183	57	0,2447806
15,565	532,2	532,2	100,75	101,32	0,189	0,183	58	0,2480558
15,428	532,2	532,2	101,89	102,23	0,189	0,183	59	0,2458094
15,355	532,2	532,2	102,13	102,72	0,189	0,183	60	0,2447658
15,515	532,2	532,2	100,74	101,29	0,189	0,183	61	0,2476937
15,805	532,2	532,2	99,14	99,52	0,189	0,183	62	0,252208
15,654	532,3	532,2	100,01	100,62	0,189	0,183	63	0,249756
15,651	532,3	532,2	99,99	100,44	0,189	0,183	64	0,2497568
15,714	532,2	532,2	99,54	99,96	0,189	0,182	65	0,250782
15,573	532,2	532,2	100,47	100,81	0,189	0,182	66	0,2487281
15,448	532,3	532,2	101,26	101,75	0,189	0,183	67	0,2465826
15,512	532,3	532,2	100,88	101,22	0,189	0,183	68	0,2477123
15,506	532,2	532,2	100,93	101,28	0,189	0,183	69	0,2476952
15,503	532,1	532,1	100,61	101,25	0,189	0,183	70	0,247695
15,378	532,0	532,1	101,49	102,06	0,189	0,183	71	0,2458249
15,794	532,0	532,1	98,74	99,20	0,189	0,183	72	0,2526031
15,636	532,0	532,0	99,84	100,04	0,189	0,183	73	0,2501666
15,483	532,0	532,0	100,63	101,14	0,189	0,183	74	0,2476966
15,631	531,9	532,0	99,80	100,12	0,189	0,183	75	0,2500998
15,546	531,9	532,0	100,45	100,78	0,190	0,183	76	0,2487277
15,539	531,9	532,0	100,33	100,90	0,190	0,183	77	0,2487263
15,507	531,9	532,0	100,34	100,91	0,189	0,183	78	0,2483148
15,514	532,0	532,0	100,54	100,92	0,189	0,183	79	0,2483156
15,650	532,1	532,1	99,91	100,23	0,190	0,183	80	0,2501675
15,630	532,3	532,3	99,88	100,47	0,189	0,183	81	0,2497557
15,590	532,5	532,4	100,44	100,92	0,189	0,183	82	0,2488314
15,721	532,7	532,6	99,67	100,08	0,189	0,183	83	0,2507662
15,523	532,9	532,7	100,94	101,28	0,189	0,182	84	0,2476923
15,675	533,1	532,9	99,84	100,51	0,189	0,183	85	0,2501686
15,578	533,2	533,0	100,23	100,85	0,189	0,183	86	0,2487287
15,633	533,2	533,1	99,80	100,25	0,189	0,182	87	0,2497577
15,540	533,2	533,1	100,41	101,08	0,189	0,183	88	0,2483224
15,630	533,2	533,2	99,83	100,28	0,189	0,183	89	0,2497576
15,664	533,1	533,1	99,27	99,92	0,189	0,183	90	0,2505206
15,667	533,1	533,1	99,33	99,89	0,189	0,183	91	0,2507615
15,511	533,0	533,1	100,28	100,67	0,189	0,183	92	0,248318
15,532	532,9	533,0	100,07	100,63	0,189	0,183	93	0,2487312
15,615	532,8	533,0	99,36	100,04	0,189	0,183	94	0,2501695
15,585	532,7	532,9	99,63	99,96	0,189	0,183	95	0,2497381
15,606	532,7	532,9	99,50	99,98	0,189	0,183	96	0,2501722
15,735	532,7	532,9	98,76	99,20	0,189	0,183	97	0,2522105
15,644	532,7	532,8	99,24	99,65	0,189	0,183	98	0,2507861
15,613	532,6	532,8	99,40	99,84	0,189	0,183	99	0,2502847
15,578	532,5	532,8	99,48	100,06	0,189	0,183	100	0,2497603
15,697	532,4	532,7	98,87	99,18	0,189	0,183	101	0,2516008
15,639	532,4	532,6	99,21	99,58	0,189	0,182	102	0,2507855
15,752	532,3	532,6	98,45	98,80	0,189	0,183	103	0,2526174
15,735	532,3	532,5	98,70	99,10	0,189	0,183	104	0,2522106
15,636	532,2	532,5	99,14	99,34	0,189	0,182	105	0,250784
15,593	532,2	532,5	99,58	99,88	0,189	0,182	106	0,2500621
15,560	532,2	532,5	99,37	99,87	0,189	0,183	107	0,2497588
15,621	532,2	532,5	99,21	99,35	0,189	0,182	108	0,2507827
15,440	532,1	532,4	100,37	100,85	0,189	0,183	109	0,2476983
15,592	532,0	532,4	99,29	99,75	0,189	0,183	110	0,2502245
15,742	531,9	532,3	98,46	99,00	0,189	0,183	111	0,252584
15,717	531,9	532,2	98,72	98,98	0,189	0,183	112	0,2522093
15,688	531,9	532,2	98,69	99,06	0,190	0,183	113	0,2518905
15,710	531,9	532,2	98,54	98,82	0,189	0,183	114	0,2522107

15,559	531,9	532,2	99,44	100,04	0,189	0,183	115	0,2497601
15,343	531,9	532,1	100,95	101,62	0,189	0,183	116	0,2462437
15,556	531,9	532,1	99,48	99,94	0,189	0,183	117	0,249759
15,732	531,8	532,1	98,58	99,07	0,190	0,183	118	0,2526178
15,616	531,8	532,0	99,12	99,57	0,190	0,183	119	0,2507821
15,669	531,8	532,0	99,02	99,29	0,190	0,183	120	0,2516004
15,551	531,8	532,0	99,48	99,88	0,190	0,183	121	0,2497586
15,578	531,7	532,0	99,32	99,82	0,189	0,183	122	0,2501686
15,550	531,7	531,9	99,65	99,99	0,190	0,183	123	0,2497539
15,576	531,6	531,9	99,35	99,88	0,190	0,183	124	0,2501694
15,638	531,6	531,9	99,00	99,24	0,189	0,183	125	0,251191
15,723	531,5	531,8	98,48	98,76	0,190	0,183	126	0,2526165
15,550	531,5	531,8	99,64	100,10	0,190	0,183	127	0,2497573
15,481	531,4	531,8	99,91	100,65	0,190	0,183	128	0,2487291
15,482	531,4	531,7	100,06	100,38	0,190	0,183	129	0,2487283
15,692	531,4	531,7	98,78	99,00	0,190	0,183	130	0,2521748
15,781	531,4	531,7	98,00	98,62	0,190	0,183	131	0,2536277
15,540	531,3	531,7	99,45	99,98	0,190	0,183	132	0,2497567
15,700	531,3	531,6	98,53	99,07	0,190	0,183	133	0,2523348
15,606	531,3	531,6	99,19	99,67	0,190	0,183	134	0,2507821
15,630	531,3	531,6	99,06	99,33	0,190	0,183	135	0,2511905
15,410	531,3	531,6	100,49	100,92	0,190	0,183	136	0,2476995
15,599	531,3	531,6	99,17	99,76	0,190	0,183	137	0,2507821
15,476	531,2	531,5	100,02	100,59	0,190	0,183	138	0,2487284
15,783	531,2	531,5	97,97	98,51	0,190	0,183	139	0,2536218
15,659	531,1	531,5	99,01	99,37	0,190	0,183	140	0,2515976
15,630	531,1	531,4	99,02	99,62	0,190	0,183	141	0,2511909
15,386	531,1	531,4	100,64	100,93	0,190	0,183	142	0,2473763
15,599	531,1	531,4	99,17	99,58	0,190	0,183	143	0,2507545
15,714	531,0	531,4	98,51	98,92	0,190	0,183	144	0,2526148
15,627	530,9	531,3	99,11	99,38	0,190	0,183	145	0,2511892
15,564	531,0	531,4	99,32	99,54	0,190	0,183	146	0,2501665
15,673	531,2	531,4	99,03	99,46	0,190	0,183	147	0,251639
15,328	531,4	531,5	101,31	101,79	0,190	0,183	148	0,2458362
15,457	531,5	531,7	100,67	100,94	0,190	0,183	149	0,2476953
15,521	531,7	531,9	100,30	100,88	0,190	0,183	150	0,2485468
15,541	531,9	532,0	100,23	100,82	0,189	0,183	151	0,2487276
15,840	532,1	532,2	98,27	98,79	0,189	0,183	152	0,2536244
15,621	532,2	532,3	99,52	99,80	0,189	0,183	153	0,2501678
15,698	532,3	532,4	98,98	99,60	0,189	0,183	154	0,251473
15,517	532,4	532,5	100,14	100,53	0,189	0,183	155	0,2487286
15,582	532,4	532,5	99,59	99,99	0,189	0,183	156	0,2497588
15,600	532,4	532,6	99,32	99,76	0,189	0,182	157	0,250168
15,793	532,4	532,6	98,16	98,67	0,189	0,183	158	0,2532602
15,502	532,4	532,6	100,00	100,50	0,189	0,183	159	0,2487024
15,671	532,3	532,5	98,81	99,45	0,189	0,183	160	0,2515998
15,560	532,2	532,5	99,54	100,00	0,189	0,183	161	0,2497595
15,750	532,2	532,5	98,35	98,67	0,189	0,183	162	0,2527917
15,641	532,2	532,4	99,03	99,36	0,189	0,183	163	0,251192
15,581	532,2	532,4	99,29	99,62	0,189	0,183	164	0,2501671
15,634	532,1	532,4	99,09	99,55	0,189	0,183	165	0,2511237
15,785	532,0	532,4	98,02	98,44	0,190	0,183	166	0,2536296
15,603	532,0	532,3	99,01	99,44	0,189	0,183	167	0,2507843
15,604	532,0	532,3	99,01	99,44	0,189	0,183	168	0,2507847
15,652	532,0	532,3	98,82	99,05	0,190	0,183	169	0,2516005
15,484	532,0	532,2	99,85	100,22	0,190	0,183	170	0,2488189
15,564	531,9	532,2	99,35	99,64	0,190	0,183	171	0,2501678
15,485	531,9	532,2	99,98	100,51	0,190	0,183	172	0,2487313
15,563	531,9	532,2	99,23	99,66	0,189	0,183	173	0,2501699
15,657	531,9	532,2	98,81	99,10	0,189	0,183	174	0,2516212
15,533	531,8	532,1	99,44	99,84	0,190	0,183	175	0,2497614

15,601	531,8	532,1	99,10	99,56	0,190	0,183	176	0,2507821
15,776	531,8	532,1	97,92	98,36	0,190	0,183	177	0,253616
15,562	531,7	532,0	99,24	99,85	0,189	0,183	178	0,2501692
15,255	531,7	532,0	101,28	101,95	0,189	0,183	179	0,2452083
15,687	531,7	532,0	98,52	98,80	0,190	0,183	180	0,2522102
15,646	531,8	532,0	98,73	99,11	0,190	0,183	181	0,2515998
15,291	531,8	532,0	101,19	101,65	0,190	0,183	182	0,2458275
15,833	531,7	532,0	97,62	98,07	0,190	0,183	183	0,2546432
15,618	531,7	532,0	98,94	99,28	0,190	0,183	184	0,251192
15,638	531,7	531,9	98,80	99,20	0,190	0,183	185	0,251582
15,614	531,7	531,9	98,73	99,35	0,190	0,183	186	0,2511916
15,460	531,6	531,9	100,05	100,41	0,190	0,183	187	0,2487322
15,704	531,5	531,8	98,37	98,74	0,190	0,183	188	0,2526163
15,845	531,5	531,8	97,49	97,59	0,190	0,183	189	0,254924
15,587	531,4	531,8	99,06	99,45	0,190	0,183	190	0,2508129
15,518	531,4	531,7	99,48	99,94	0,190	0,183	191	0,2497627
15,613	531,4	531,7	98,89	99,21	0,190	0,183	192	0,2511908
15,546	531,4	531,7	99,29	99,55	0,190	0,183	193	0,2501682
15,423	531,4	531,7	100,11	100,19	0,190	0,183	194	0,2482026
15,635	531,5	531,7	98,74	99,04	0,190	0,183	195	0,2516023
15,737	531,5	531,7	98,11	98,57	0,190	0,183	196	0,2532251
15,544	531,5	531,7	99,28	99,66	0,190	0,183	197	0,2501685
15,583	531,4	531,7	98,99	99,63	0,190	0,183	198	0,2507662
15,581	531,4	531,7	98,94	99,63	0,190	0,183	199	0,2507813

	Outlet	Outlet	Average	Average	#1	#2		
Tunnel	Temp.	Temp.	99,93	100,96	System 1	System 2		SQRT
Velocity	Meter 1	Meter 2	**Proportional Rates**		Vol.Std.	Vol.Std.		Delta-P
			PR1	**PR2**			Time	
Ft/Sec	Deg. R	Deg. R	**%**	**%**	(ft3)	(ft3)	min	(in H2O)2
15,638	532,2	532,4			0,191	0,184	0	0,2432305
15,333	532,2	532,4	101,09	102,09	0,191	0,184	1	0,2443283
15,391	532,2	532,5	100,31	101,14	0,191	0,184	2	0,2458261
15,290	532,2	532,5	100,71	101,82	0,191	0,184	3	0,2443611
15,403	532,2	532,5	99,85	100,80	0,191	0,184	4	0,2462586
15,305	532,3	532,5	99,52	100,61	0,191	0,184	5	0,2458271
15,111	532,2	532,4	100,36	101,70	0,191	0,184	6	0,2433116
15,289	532,2	532,4	99,02	99,89	0,191	0,184	7	0,2464183
15,237	532,2	532,4	99,33	100,30	0,191	0,184	8	0,2458312
15,134	532,2	532,4	99,63	100,59	0,191	0,184	9	0,244364
15,231	532,1	532,4	99,03	100,03	0,191	0,184	10	0,2458284
15,189	532,0	532,4	99,50	100,32	0,191	0,184	11	0,2451996
15,340	532,0	532,3	98,45	99,35	0,191	0,184	12	0,2476954
15,399	532,0	532,3	97,94	99,06	0,191	0,184	13	0,2487297
15,397	532,0	532,3	97,93	99,05	0,191	0,184	14	0,2487292
15,370	531,9	532,3	98,25	99,04	0,191	0,184	15	0,2483249
15,482	531,9	532,2	97,36	98,42	0,191	0,184	16	0,2501648
15,325	531,9	532,2	98,42	99,43	0,191	0,184	17	0,2476941
15,439	531,8	532,2	97,64	98,65	0,191	0,184	18	0,2494887
15,392	531,8	532,2	97,97	98,88	0,191	0,184	19	0,2487282
15,173	531,8	532,1	99,50	100,30	0,191	0,184	20	0,2452002
15,055	531,8	532,2	100,08	101,33	0,191	0,184	21	0,2433095
15,238	531,8	532,2	99,02	99,99	0,191	0,184	22	0,2462429
15,088	531,8	532,1	99,99	101,12	0,191	0,184	23	0,2437306
15,037	531,8	532,1	100,36	101,33	0,191	0,184	24	0,2428871
15,202	531,8	532,1	99,65	100,54	0,191	0,184	25	0,2451995
15,145	531,9	532,2	100,15	101,42	0,191	0,184	26	0,2439355
15,160	532,0	532,3	100,38	101,33	0,191	0,184	27	0,2437379
15,239	532,2	532,4	100,11	101,09	0,191	0,184	28	0,2447776
15,245	532,4	532,5	100,27	100,87	0,191	0,184	29	0,2447802
15,383	532,6	532,6	99,10	100,24	0,191	0,184	30	0,2471156
15,259	532,7	532,7	99,95	100,87	0,191	0,184	31	0,2452085
15,418	532,8	532,8	98,71	99,86	0,191	0,184	32	0,2476949
15,181	532,8	532,9	100,29	101,50	0,191	0,184	33	0,2438627
15,419	532,8	532,9	98,75	99,68	0,191	0,184	34	0,2476964
15,419	532,8	532,9	98,90	99,73	0,191	0,184	35	0,2477186
15,267	532,7	532,9	99,76	100,91	0,191	0,184	36	0,2451987
15,309	532,7	532,9	99,69	100,65	0,191	0,184	37	0,2458909
15,254	532,7	532,9	99,96	100,83	0,191	0,184	38	0,2449894
15,207	532,6	532,9	100,08	101,24	0,191	0,184	39	0,2443614
15,260	532,6	532,8	99,64	100,77	0,191	0,184	40	0,2451984
15,329	532,6	532,8	99,49	100,62	0,191	0,184	41	0,2462417
15,422	532,6	532,8	98,91	99,75	0,191	0,184	42	0,2476948
15,421	532,5	532,8	98,74	99,87	0,191	0,184	43	0,2476998
15,264	532,5	532,7	99,83	100,93	0,191	0,184	44	0,2452
15,333	532,4	532,7	99,45	100,48	0,191	0,184	45	0,2462417
15,253	532,4	532,6	100,06	100,90	0,191	0,184	46	0,2449729
15,341	532,3	532,6	99,52	100,47	0,191	0,184	47	0,2462628
15,464	532,3	532,6	98,72	99,76	0,191	0,184	48	0,2483165
15,179	532,3	532,5	100,33	101,65	0,191	0,184	49	0,2437314
15,299	532,3	532,5	99,65	100,68	0,191	0,184	50	0,2456711
15,496	532,3	532,5	98,54	99,59	0,191	0,184	51	0,2487285
15,276	532,3	532,5	99,84	100,96	0,191	0,184	52	0,2451989
15,433	532,3	532,5	98,98	100,12	0,191	0,184	53	0,2476955
15,339	532,3	532,5	99,46	100,50	0,191	0,184	54	0,2462424
15,185	532,3	532,5	100,56	101,53	0,191	0,184	55	0,2437312
15,344	532,3	532,5	99,49	100,61	0,191	0,184	56	0,2462415
15,254	532,3	532,5	100,12	101,27	0,191	0,184	57	0,2447798
15,275	532,3	532,5	99,96	101,07	0,191	0,184	58	0,2451992
15,278	532,3	532,5	99,92	100,95	0,191	0,184	59	0,2452327
15,152	532,3	532,4	100,80	101,90	0,191	0,184	60	0,2433093
15,221	532,2	532,5	100,30	101,23	0,191	0,184	61	0,2443613
14,930	532,2	532,4	102,40	103,51	0,191	0,184	62	0,2396243

15,274	532,2	532,4	99,95	100,99	0,191	0,184	63	0,2451988
15,251	532,1	532,3	100,24	101,21	0,191	0,184	64	0,2447784
15,246	532,2	532,4	100,22	101,16	0,191	0,184	65	0,2446738
15,267	532,2	532,4	100,11	101,22	0,191	0,184	66	0,2449684
15,187	532,2	532,4	100,50	101,59	0,191	0,184	67	0,2437297
15,132	532,2	532,3	100,99	102,16	0,191	0,184	68	0,2428858
15,089	532,2	532,3	101,35	102,18	0,191	0,184	69	0,2422528
15,155	532,2	532,3	100,76	102,00	0,191	0,184	70	0,2433091
15,216	532,2	532,3	100,38	101,30	0,191	0,184	71	0,2443225
14,990	532,3	532,3	101,90	102,75	0,191	0,184	72	0,2407699
15,076	532,3	532,3	101,11	102,14	0,191	0,184	73	0,2422525
15,140	532,3	532,4	100,72	101,69	0,191	0,184	74	0,2432926
15,135	532,3	532,4	100,59	101,81	0,191	0,184	75	0,2433078
15,312	532,3	532,4	99,52	100,34	0,191	0,184	76	0,2462403
15,032	532,3	532,4	101,19	102,35	0,191	0,184	77	0,2417375
15,149	532,3	532,4	100,52	101,36	0,191	0,184	78	0,2437281
15,183	532,3	532,4	100,16	101,01	0,191	0,184	79	0,2443596
14,959	532,4	532,4	101,53	102,64	0,191	0,184	80	0,240767
14,884	532,3	532,4	101,86	103,27	0,191	0,184	81	0,2397073
14,729	532,2	532,4	102,92	104,04	0,191	0,184	82	0,2371488
14,853	532,2	532,4	102,10	103,11	0,191	0,184	83	0,2392717
15,041	532,3	532,4	100,82	101,97	0,191	0,184	84	0,242251
14,690	532,3	532,4	103,17	104,17	0,191	0,184	85	0,2366856
15,097	532,2	532,4	100,44	101,46	0,191	0,184	86	0,2433078
14,939	532,1	532,3	101,44	102,55	0,191	0,184	87	0,2407676
15,160	532,1	532,3	99,85	100,90	0,191	0,184	88	0,2443824
14,746	532,1	532,3	102,55	103,72	0,191	0,184	89	0,2378376
15,027	532,2	532,4	100,65	101,78	0,191	0,184	90	0,2422522
15,016	532,4	532,5	100,94	102,09	0,191	0,184	91	0,2418286
14,955	532,6	532,6	101,55	102,66	0,191	0,184	92	0,2406265
14,902	532,8	532,8	101,98	103,07	0,191	0,184	93	0,2396051
14,911	533,1	533,0	102,00	102,93	0,191	0,184	94	0,2397014
15,040	533,3	533,1	100,96	102,11	0,191	0,184	95	0,2418294
15,048	533,5	533,3	100,86	101,97	0,190	0,184	96	0,2420309
15,028	533,7	533,5	100,74	101,95	0,190	0,184	97	0,2418305
15,090	533,8	533,6	100,34	101,36	0,190	0,184	98	0,242885
15,134	533,8	533,7	99,87	100,87	0,190	0,183	99	0,2437308
14,925	533,9	533,8	101,38	102,52	0,190	0,184	100	0,2404087
14,943	534,0	533,9	101,10	102,22	0,190	0,184	101	0,2407671
15,068	534,0	534,0	100,22	101,53	0,190	0,184	102	0,2428896
15,041	534,0	534,0	100,28	101,39	0,190	0,184	103	0,2424802
14,921	534,0	534,1	101,10	102,29	0,190	0,184	104	0,2405484
15,026	534,0	534,0	100,46	101,54	0,190	0,184	105	0,2422561
15,153	533,9	534,0	99,53	100,63	0,190	0,184	106	0,2443638
15,047	533,9	534,0	100,24	101,51	0,190	0,184	107	0,2426434
14,930	533,9	534,0	100,92	102,24	0,190	0,184	108	0,2408324
14,990	533,9	534,1	100,58	101,63	0,190	0,184	109	0,2418333
15,080	533,9	534,1	100,06	101,18	0,191	0,184	110	0,2433141
15,196	533,9	534,1	99,21	100,06	0,191	0,184	111	0,2452027
15,101	533,9	534,1	99,72	100,88	0,190	0,184	112	0,2437121
15,102	534,0	534,1	99,67	100,99	0,190	0,184	113	0,2437357
15,076	534,0	534,2	99,87	101,05	0,190	0,184	114	0,2433149
15,142	534,0	534,2	99,55	100,62	0,190	0,184	115	0,2443875
15,104	534,1	534,3	99,83	100,69	0,191	0,184	116	0,2437369
14,828	534,2	534,3	101,72	102,75	0,191	0,184	117	0,2392831
15,167	534,2	534,4	99,41	100,14	0,191	0,184	118	0,2447864
14,917	534,2	534,4	101,14	101,98	0,191	0,183	119	0,2407746
15,100	534,3	534,5	99,78	100,98	0,191	0,184	120	0,2437353
15,048	534,3	534,5	99,99	101,34	0,190	0,184	121	0,242894
15,141	534,3	534,5	99,53	100,49	0,190	0,184	122	0,2443684
15,229	534,3	534,6	98,85	100,02	0,190	0,184	123	0,2458254
15,045	534,3	534,6	100,10	101,31	0,190	0,184	124	0,2428957
15,043	534,3	534,6	100,14	101,08	0,191	0,184	125	0,242896
15,096	534,3	534,6	99,97	100,76	0,191	0,184	126	0,2437385
15,228	534,3	534,6	99,00	99,89	0,191	0,184	127	0,2458773
15,064	534,2	534,6	100,07	101,18	0,191	0,184	128	0,2433185
15,132	534,2	534,5	99,50	100,61	0,191	0,184	129	0,2443693
14,898	534,2	534,5	101,13	102,06	0,191	0,184	130	0,2406129
15,001	534,2	534,5	100,38	101,46	0,191	0,184	131	0,2422619

14,971	534,2	534,5	100,59	101,47	0,191	0,184	132	0,2418384
14,997	534,2	534,5	100,35	101,32	0,191	0,184	133	0,2422621
15,294	534,2	534,5	98,39	99,61	0,191	0,184	134	0,2471159
14,993	534,2	534,5	100,38	101,49	0,191	0,184	135	0,2422548
15,059	534,1	534,5	99,95	100,94	0,191	0,184	136	0,2433178
15,240	534,1	534,5	98,69	99,82	0,191	0,184	137	0,2462513
15,113	534,1	534,5	99,51	100,69	0,191	0,184	138	0,2441588
15,034	534,2	534,5	100,11	101,02	0,191	0,184	139	0,2428957
14,965	534,2	534,5	100,40	101,47	0,191	0,184	140	0,2418389
14,901	534,2	534,5	100,91	102,13	0,190	0,184	141	0,2407767
15,033	534,2	534,5	100,10	101,07	0,191	0,184	142	0,242916
15,122	534,2	534,5	99,44	100,30	0,191	0,184	143	0,2443694
15,084	534,1	534,5	99,76	100,51	0,191	0,183	144	0,2437661
14,854	534,1	534,5	101,28	102,20	0,191	0,184	145	0,2400513
15,124	534,1	534,5	99,46	100,67	0,191	0,184	146	0,2443674
15,082	534,1	534,5	99,75	100,69	0,191	0,184	147	0,2437382
15,389	534,1	534,5	97,64	98,71	0,191	0,184	148	0,2486938
14,884	534,1	534,5	100,96	102,05	0,190	0,184	149	0,240516
15,119	534,1	534,5	99,53	100,36	0,191	0,184	150	0,2443689
15,145	534,1	534,5	99,34	100,19	0,191	0,184	151	0,2447879
15,025	534,1	534,5	100,16	101,07	0,191	0,184	152	0,2428956
14,869	534,1	534,5	100,99	102,08	0,191	0,184	153	0,2403472
14,964	534,1	534,5	100,40	101,43	0,190	0,184	154	0,2418383
14,870	534,1	534,5	101,18	102,14	0,191	0,184	155	0,2403488
15,029	534,1	534,5	100,17	101,17	0,191	0,184	156	0,2428971
15,119	534,0	534,5	99,43	100,50	0,191	0,184	157	0,2443684
15,079	534,1	534,5	99,77	100,86	0,191	0,184	158	0,2437378
15,346	534,1	534,5	98,04	99,05	0,191	0,184	159	0,2480873
14,962	534,0	534,5	100,40	101,68	0,191	0,184	160	0,2418383
15,053	534,1	534,5	99,79	100,90	0,190	0,184	161	0,2433197
15,079	534,0	534,5	99,63	100,71	0,190	0,184	162	0,243734
15,058	534,0	534,5	99,74	100,84	0,190	0,184	163	0,243406
15,080	534,1	534,5	99,66	100,59	0,190	0,184	164	0,2437392
15,144	534,1	534,5	99,25	100,20	0,191	0,184	165	0,2447877
15,168	534,0	534,5	99,07	100,01	0,191	0,184	166	0,2452066
15,078	534,0	534,4	99,64	100,65	0,191	0,184	167	0,2437392
15,055	534,0	534,4	99,91	101,06	0,191	0,184	168	0,2433176
14,964	534,0	534,5	100,66	101,67	0,191	0,184	169	0,2418379
15,148	534,1	534,5	99,43	100,29	0,191	0,184	170	0,2448425
15,026	534,1	534,5	100,07	101,01	0,191	0,184	171	0,2428957
15,051	534,1	534,5	99,86	101,01	0,191	0,184	172	0,2433183
14,814	534,2	534,6	101,55	102,54	0,191	0,184	173	0,2394754
15,210	534,2	534,6	98,89	99,82	0,191	0,184	174	0,2458339
15,079	534,3	534,7	99,70	100,90	0,191	0,184	175	0,243742
14,987	534,3	534,7	100,39	101,27	0,191	0,184	176	0,2422612
15,104	534,2	534,7	99,65	100,39	0,191	0,184	177	0,2441473
15,117	534,2	534,7	99,53	100,50	0,191	0,184	178	0,2443709
15,119	534,2	534,7	99,32	100,52	0,191	0,184	179	0,2443693
15,027	534,3	534,7	100,04	101,16	0,190	0,184	180	0,2428961
15,145	534,3	534,7	99,17	100,27	0,191	0,184	181	0,2447882
15,077	534,3	534,7	99,72	100,71	0,191	0,184	182	0,2437383
15,170	534,3	534,7	99,14	100,12	0,191	0,184	183	0,2452085
15,170	534,3	534,7	99,02	100,02	0,191	0,184	184	0,2452149
14,777	534,3	534,7	101,84	102,71	0,191	0,184	185	0,2388711
15,171	534,3	534,7	99,05	100,23	0,191	0,184	186	0,245207
15,233	534,3	534,7	98,69	99,58	0,191	0,184	187	0,2462102
15,164	534,3	534,7	99,10	100,13	0,191	0,184	188	0,245154
15,051	534,3	534,8	99,92	100,92	0,191	0,184	189	0,2433181
15,024	534,4	534,8	99,99	100,79	0,191	0,184	190	0,2428959
15,206	534,4	534,8	98,73	99,69	0,190	0,183	191	0,245834
15,076	534,4	534,8	99,74	100,48	0,191	0,184	192	0,2437434
15,114	534,3	534,8	99,49	100,31	0,191	0,184	193	0,2443703
15,137	534,3	534,8	99,24	100,42	0,191	0,184	194	0,2447828
15,201	534,3	534,8	98,76	99,90	0,191	0,184	195	0,2458152
15,073	534,3	534,8	99,60	100,46	0,191	0,184	196	0,2437391
15,112	534,3	534,8	99,49	100,35	0,191	0,184	197	0,2443698
15,075	534,3	534,8	99,61	100,64	0,191	0,184	198	0,2437388
15,075	534,3	534,8	99,84	100,47	0,191	0,184	199	0,2437284
15,320	534,4	534,9	98,13	98,98	0,191	0,184	200	0,247705

15,133	534,5	534,9	99,14	100,19	0,191	0,184	201	0,2446657
15,123	534,5	534,9	99,28	100,34	0,190	0,184	202	0,2444896
15,027	534,5	534,9	100,05	101,03	0,191	0,184	203	0,2429055
14,987	534,5	535,0	100,28	101,16	0,191	0,184	204	0,2422628
15,232	534,5	535,0	98,77	99,42	0,191	0,183	205	0,2462518
15,062	534,6	535,0	99,80	100,72	0,191	0,183	206	0,2434404
15,170	534,6	535,1	99,10	100,04	0,191	0,184	207	0,2452065
15,210	534,6	535,1	98,72	99,69	0,191	0,184	208	0,2458451
15,067	534,7	535,1	99,69	100,53	0,190	0,183	209	0,2435109
15,029	534,7	535,1	100,00	101,24	0,190	0,184	210	0,2428979
15,175	534,7	535,2	99,09	100,17	0,191	0,184	211	0,2452101
15,006	534,8	535,2	100,18	101,03	0,191	0,184	212	0,2424842
15,043	534,8	535,2	99,99	101,05	0,191	0,184	213	0,2430555
15,059	534,8	535,3	99,92	101,03	0,191	0,184	214	0,2433197
14,992	534,9	535,3	100,21	101,36	0,191	0,184	215	0,2422635
15,115	534,8	535,3	99,56	100,44	0,191	0,184	216	0,2442707
14,905	534,9	535,3	100,66	102,06	0,190	0,184	217	0,2408218
14,993	534,9	535,3	100,04	101,11	0,190	0,184	218	0,2422632
15,123	534,9	535,3	99,26	100,48	0,190	0,184	219	0,2443614
15,181	534,9	535,3	98,99	100,03	0,190	0,184	220	0,2452523
14,838	534,9	535,3	101,18	102,05	0,190	0,183	221	0,2397125
15,178	534,9	535,3	98,93	99,57	0,190	0,183	222	0,2452094
14,889	534,9	535,3	100,89	101,87	0,190	0,183	223	0,2405094
15,063	534,9	535,4	99,81	100,86	0,190	0,184	224	0,2433199
15,090	535,0	535,4	99,57	100,36	0,190	0,183	225	0,24374
14,961	535,0	535,4	100,39	101,52	0,190	0,183	226	0,241703
15,370	535,0	535,4	97,76	98,58	0,190	0,183	227	0,2483368
14,969	535,1	535,5	100,33	101,35	0,190	0,183	228	0,2418389
15,179	535,1	535,5	98,88	99,90	0,190	0,183	229	0,2452085

APPENDIX 3: Calibration data

TEST DATA PACKAGE

CLIENT	Hearthstone	PROJECT NUMBER	PI-20189
PRODUCT	Wood stove	SAMPLE ID#	QI_20286
MODEL	GM 40		
STANDARDS	EPA method 28		

TEST EQUIPMENT

ITEM	EQUIPMENT TYPE	MANUFACTURER	EQUIPMENT #	CALIBRATION DUE DATE	COMPLIES WITH STANDARD REQUIREMENTS
1	Dessicator cabinet	Shop built	EG-014	Na	Y
2	Wood humidity chamber	Shop built	EG-034	Na	Y
3	Filter holder 47 mm in line(4)	Pall	EG-052	Na	Y
4	Filter holder 47 mm in line(4)	Pall	EG-053	Na	Y
5	Impiger train	Shop built	EG-054	Na	Y
6	Diaphragm Vacuum pump avec gauge	GAST	EG-055 / EG-056	Na	Y
7	Laboratory gas drying unit	Drierite	EG-061/ EG-062	Na	Y
8	Moisture meter	Delmhosrt	EM-003/	Verification before use	Y
9	Moisture meter Hammer	Delmhorst	EM-112	Verification before use	Y
10	Calibration block	Delmhorst	EM-191	2019 Dec.	Y
11	Digital Manometer	Dwyer	EM-006	2020 March	Y
12	Digital Manometer	Dwyer	EM-249	2020 March	Y
13	Data aquisition System	Keithley	EM-047	2019 sept.	Y
14	analytical scale 200gr.	Ohaus	EM-051	June 2019	Y
15	Weight 2kg	na	EM-090	2023 January	Y
16	Pitot tube	Dwyer	EM-111	Verification before use	Y
17	Scale 0-1000lbs Rough Deck	Rice lake	EM-257	2019-sept	Y
18	Gas analyzer	Siemen's	EM-118	Verification before use	Y
19	Vacuum gauge	Dwyer	EM-126	2020 March	Y
20	Vacuum gauge	Dwyer	EM-127	2020 March	Y
21	Calibration weight 100mg	Troemer	EM-128	2023 January	y

CLIENT	Hearthstone	PROJECT NUMBER	PI-20189
PRODUCT	Wood stove	SAMPLE ID#	QI_20286
MODEL	GM 40		
STANDARDS	EPA method 28		

22	Calibration weight 200g	Troemer	EM-129	2023 January	Y
23	Reference Dry gas meter	American meter	EM-130	2019 April	Y
24	Temperature humidity meter	Fluke	EM-136	2020-03-09	Y
25	Digital weight indicator	Rice lake	EM-256	2019-sept	Y
26	Vane anemometer	Omega	EM-153	2019-08-16	Y
27	Measuring tape	Stanley	EM-224	2020-03-06	Y
28	Chronometer	Extech	EM-175	2019-12-20	Y
29	Dry gas meter	Shinagwa corporation	EM-178	2019 May	Y
30	Dry gas meter	Shinagwa corporation	EM-179	2019 May	Y
31	Calibration gas	Praxair	EM-275	2020 oct	Y
32	Calibration gas	Praxair	EM-276	2020 Oct	Y
33	Thermometer	Fluke	EM-001	2020 March	Y
34	20 channel card	Keithley	EM-015	2019 Sept	Y
35	20 channel card	Keithley	EM-154	2019 Sept	Y
36	Filter holder	Pall	EG-085	NA	y
37	Dessicator cabinet	Shop built	EG-098	NA	Y
38	Barometer	Company control	EM-304	July 2019	Y

DISPERSION
Laboratoire • Laboratory DIVISION - TRANSCAT CANADA

ACCREDITATION ISO 17025
CNN Portée Numéro 668

CERTIFICAT D'ÉTALONNAGE

9900 Chemin de la Côte-de-Liesse, Lachine, QC H8T 1A1
www.dispersion.ca 1.866.390.5066

Client :	Polytests	**No. du Certificat :**	**155-578412-181-1649**
Adresse :	695 B rue Gaudette Saint-Jean-sur-Richelieu, QC J3B7S7	**Date d'étalonnage :**	11-12-2018

Technicien:
Mossad, Osama

David Llorens, Responsable Qualité

DESCRIPTION DU SERVICE:

Modèle de Balance :	AR2140	**Méthode :**	ISO 17025
Manufacturier :	Ohaus	**Date d'approbation :**	11-12-2018
Numéro de Série :	M3658329010091	**Date prochain étalonnage :**	11-12-2019
Numéro d'identification :	EM-051	**accréditation CCN n. :**	668
Capacité :	210g	**Certification CLAS n. :**	2010-01
Résolution:	0.0001g		

Condition d'essai :	Temp °C:	27.1	Pression kPa:	99.81	Humidité %:	26.1

Note: Les conditions environnementales ne sont pas utilisées dans le calcul de l'incertitude.

CETTE BALANCE RENCONTRE LES SPÉCIFICATIONS SUIVANTES:

Type de test :	**Manufacturier**
Excentricité:	☑ Oui ☐ Non
Linéarité:	☑ Oui ☐ Non
Sensibilité:	☑ Oui ☐ Non
Répétabilité:	☑ Oui ☐ Non

NOTES:

Cette balance a été certifiée selon la procédure de travail PDL-09-MG-010 (certification de balance analytique et à plateau) et la et la procédure PDL-09-MG-012 (détermination des incertitudes de pesées). Nos étalons sont certifiés à chaque année. Le droit d'auteur du présent certificat appartient au laboratoire délivreur et doit être reproduit intégralement, à moins d'une autorisation écrite du laboratoire délivreur.

2018-12-12

DISPERSION
Laboratoire • Laboratory DIVISION • TRANSCAT CANADA

ACCREDITATION ISO 17025
CNN Portée Numéro 668

CERTIFICAT D'ÉTALONNAGE

9900 Chemin de la Côte-de-Liesse, Lachine, QC H8T 1A1
www.dispersion.ca 1.866.390.5066

Client :	Polytests	**No. du Certificat :**	**155-578412-181-1649**
Adresse :	695 B rue Gaudette	**Accrédtation CCN n. :**	668
	Saint-Jean-sur-Richelieu, QC	**Certification CLAS n. :**	2010-01
	J3B7S7	**Modèle de Balance :**	AR2140
		Date d'étalonnage :	11-12-2018
Méthode :	ISO 17025	**Date du prochain étalonnage :**	11-12-2019

TEST D'EXCENTRICITÉ:

Poids Test: 100 g Tolérance 0.0004 g
(Note: Le Poids Test est taré au centre du plateau de pesée)

Position	Avant Ajustement	Après Ajustement
1: Centre:	0.0000 g	---
2: Avant Gauche:	0.0000 g	---
3: Arrière Gauche:	0.0000 g	---
4: Arrière Droit:	0.0000 g	---
5: Avant Droit:	0.0000 g	---
Résultats	0.0000 g	---
STATUT	**CONFORME**	**N/A**

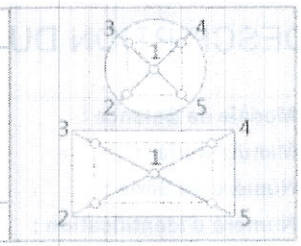

TEST DE LINÉARITÉ:

Méthode: Substitution Plage: 210 g Poids Test: 50 g Tolérance: 0.0002 g

Pré-Charge	Avant Ajustement	Après Ajustement
0.0000 g	50.0001 g	---
50.0000 g	50.0000 g	---
100.0000 g	50.0000 g	---
150.0000 g	50.0000 g	---
---	---	---
---	---	---
---	---	---
Résultats	**0.00007 g**	**---**
STATUT	**CONFORME**	**N/A**

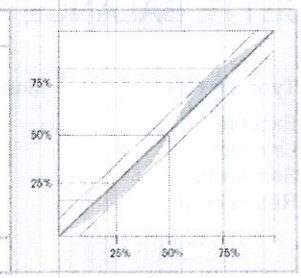

TEST DE SENSIBILITÉ:

Valeur de masse conventionnelle: 200.0001 g Tolérance: 0.0004 g Résultats: 0.00% < 0.10%

	Avant Ajustement	Après Ajustement
Lecture:	200.0001 g	---
Résultats:	**0.0000 g**	**---**
STATUT	**CONFORME**	**N/A**

$$S = \frac{\Delta W}{\Delta m}$$

DISPERSION
Laboratoire • Laboratory DIVISION • TRANSCAT CANADA

ACCREDITATION ISO 17025
CNN Portée Numéro 668

9900 Chemin de la Côte-de-Liesse, Lachine, QC H8T 1A1
www.dispersion.ca 1.866.390.5066

CERTIFICAT D'ÉTALONNAGE

Client :	Polytests	**No. du Certificat :**	**155-578412-181-1649**
Adresse :	695 B rue Gaudette	**Accrédtation CCN n. :**	668
	Saint-Jean-sur-Richelieu, QC	**Certification CLAS n. :**	2010-01
	J3B7S7	**Modèle de Balance :**	AR2140
		Date d'étalonnage :	11-12-2018
Méthode :	ISO 17025	**Date du prochain étalonnage :**	11-12-2019

TEST DE RÉPÉTABILITÉ:

AVANT AJUSTEMENT:

Charge Utilisée:
100.0000 g

Tolérance:
0.00010 g

Résolution d'affichage:
0.0001 g

Moyenne:
100.00003 g

Écart-type:
0.00005 g

#	Vide	Chargé	Différence
1	0.0000 g	100.0001 g	100.0001 g
2	0.0000 g	100.0001 g	100.0001 g
3	0.0000 g	100.0001 g	100.0001 g
4	0.0000 g	100.0000 g	100.0000 g
5	0.0000 g	100.0000 g	100.0000 g
6	0.0000 g	100.0000 g	100.0000 g
7	0.0000 g	100.0000 g	100.0000 g
8	0.0000 g	100.0000 g	100.0000 g
9	0.0000 g	100.0000 g	100.0000 g
10	0.0000 g	100.0000 g	100.0000 g
		Statut :	CONFORME

APRÈS AJUSTEMENT:

Charge Utilisée:

Tolérance:
0.00010 g

Résolution d'affichage:
0.0001 g

Moyenne:

Écart-type:

#	Vide	Chargé	Différence
1	---	---	---
2	---	---	---
3	---	---	---
4	---	---	---
5	---	---	---
6	---	---	---
7	---	---	---
8	---	---	---
9	---	---	---
10	---	---	---
		Statut :	**N/A**

DISPERSION
Laboratoire • Laboratory DIVISION • TRANSCAT CANADA

ACCREDITATION ISO 17025
CNN Portée Numéro 668

9900 Chemin de la Côte-de-Liesse, Lachine, QC H8T 1A1
www.dispersion.ca 1.866.390.5066

CERTIFICAT D'ÉTALONNAGE

INCERTITUDE AVANT AJUSTEMENT :

$$Uc = \sqrt{(u_{(cr)}{}^2 + s_p{}^2 + u_{(l)}{}^2 + u_{(dr)}{}^2 + u_{(s)}{}^2)}$$

u(cr) =	Incertitude reliée à l'étalon utilisé
Sp =	Incertitude de l'écart-type
u(l) =	Incertitude associée à la linéarité
u(dr) =	Incertitude associée à résolution si Sp = 0
u(s) =	Incertitude liée à la sensibilité (span)

Valeur	Incertitude	Incertitude (%)
12.5000 g	0.00016 g	0.001284 %
25.0000 g	0.00016 g	0.000642 %
50.0000 g	0.00016 g	0.000322 %
100.0000 g	0.00016 g	0.000162 %
200.0000 g	0.00023 g	0.000113 %

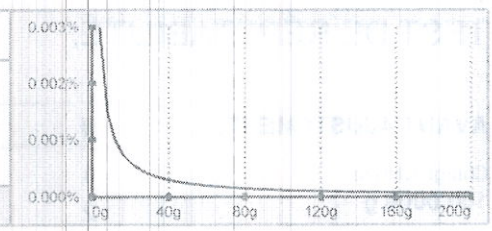

INCERTITUDE APRÈS AJUSTEMENT :

Valeur	Incertitude	Incertitude (%)
---	---	---
---	---	---
---	---	---
---	---	---

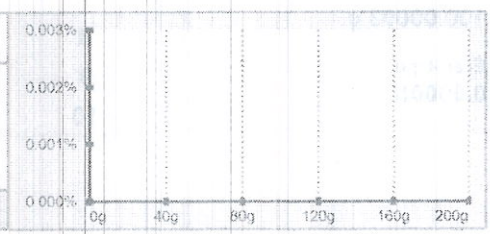

NOTES :

De ces valeurs d'incertitudes, seule la valeur surlignée est calculée selon ISO17025:2005, les autres étant estimées jusqu'au résultat de l'incertitude minimale. Dans le calcul de cette l'incertitude, l'écart-type utilisé est de 0,577d (où d est la précision d'affichage de la balance) lorsque cet écart-type est plus inférieur à 0,577d.

CERTIFICAT D'ÉTALONNAGE

9900 Chemin de la Côte-de-Liesse, Lachine, QC H8T 1A1
www.dispersion.ca 1.866.390.5066

RÉFÉRENCE

ENSEMBLE DE RÉFÉRENCE:

Référence	No de série	Fabricant	Date d'étalonnage
1mg-5kg	DK000A213	Dispersion	16-03-2018

INCERTITUDES:

Les incertitudes que nous retrouvons comprennent :

1. *L'incertitude associée à l'opération de pesage.*
2. *L'incertitude associée à l'écart-type.*
3. *L'incertitude associée à l'étalon utilisé.*
4. *L'incertitude associée à la résolution de l'appareil.*

L'incertitude de l'opération de pesage comprend la reproductibilité à long terme.

Les incertitudes précisées dans ce rapport sont des incertitudes élargies représentant un niveau de confiance d'approximativement 95 %, obtenu en multipliant ensemble l'incertitude-type composée par un facteur de couverture de k = 2. Pour de plus amples renseignements, veuillez consulter la publication GUM (Guide pour l'expression de l'incertitude de mesure, édition de 1995).

TRAÇABILITÉ

Le Service d'évaluation de laboratoires d'étalonnage (CLAS) du Conseil national de recherches du Canada (CNRC) a évalué et a certifié des capacités d'étalonnage spécifiques de ce laboratoire et leur traçabilité à des étalons nationaux de mesure reconnus et au Système international d'unités (SI). Ce certificat d'étalonnage est émis conformément aux conditions de certification accordées par CLAS et aux conditions d'accréditation accordées par le Conseil canadien des normes (CCN). Le CLAS pas plus que le CCN ne peut garantir l'exactitude des étalonnages individuels effectués par des laboratoires accrédités.

REMARQUES:

POLYCONTROLS
INTEGRATION • CALIBRATION • INSTRUMENTATION

CLAS 2009-02

Conseil canadien des normes
Laboratoire accrédité
Portée d'accréditation 655

ISO/IEC 17025-2005

CERTIFICAT D'ÉTALONNAGE # 9786

Date d'étalonnage : 2018-11-12
Date d'émission du certificat : 2018-11-12

Services Polytests
695 B Gaudette street
St-Jean-sur-Richelieu, Québec, Canada
J3B 7S7

Étalonnage d'un
Débitmètre volumétrique American Meter Company DTM-200A S/N : 99A274209

CONFORMITÉ AU PROGRAMME DE QUALITÉ

Tous les étalonnages sont effectués conformément au manuel d'assurance qualité de Polycontrols qui est conforme à la norme ISO/IEC 17025 – 2005, à la norme ISO 9001 – 2015 ainsi qu'à tout autre exigences de qualité définies dans la description d'achat des clients.

TRAÇABILITÉ

La traçabilité des étalons de débit au National Institute of Standards and Technology, NIST, est maintenue par les laboratoires de Fluke Corporation de Phoenix, Arizona et est conforme aux normes ISO/IEC 17025, AINSI/NCSL Z540-1-1994, ISO-10012-1, MIL-STD 45662A.

Le Service d'évaluation des laboratoires d'étalonnage (CLAS) du Conseil national de recherches du Canada (CNRC) a évalué et certifié la capacité d'étalonnage du laboratoire et la traçabilité au Système international d'unités (SI) ou à des étalons acceptables selon le CLAS. Le présent certificat d'étalonnage est délivré conformément aux conditions de certification du CLAS et aux conditions d'accréditation du Conseil canadien des normes (CCN). Le CLAS et le CCN ne garantissent pas l'exactitude des étalonnages individuels effectués par les laboratoires accrédités.

APTITUDE EN MATIÈRE DE MESURE ET D'ÉTALONNAGE - CMC

Les références utilisées pour l'étalonnage de débit ont une incertitude de ±0.2% de la lecture pour les mesures entre 5 SCCM à 10 SLPM, ±0.3% de la lecture pour les mesures entre 10 SLPM à 30 SLPM, ±0.2% de la lecture pour les mesures entre 30 SLPM à 3000 SLPM, ±0.3% de la lecture pour les mesures supérieures à 3000 SLPM jusqu'à 6000 SLPM et ±0.5% pour les mesures inférieures à 5 SCCM jusqu'à concurrence de 1 SCCM, équivalent air ou azote. Les incertitudes exprimées sont élargies avec un facteur d'élargissement k = 2, et ce, pour un niveau de confiance d'environ 95 %, dans l'hypothèse d'une distribution normale incluant la résolution de l'instrument. Le rapport d'incertitude des essais (RIE) de cet étalonnage respecte un ratio de 4:1 à moins d'indication contraire.

SOMMAIRE DES CONDITIONS DE L'INSTRUMENT EN TEST

Conditions initiales	En bon état
Travail Effectué	Étalonnage de l'instrument
	Lectures Initiales = Lectures finales, aucun ajustement
Résultats	Lectures finales dans les tolérances
Remarques	Fréquence d'étalonnage aux 12 mois

Métrologiste

Responsable du laboratoire

©2012 Polycontrols • Le présent document ne peut être reproduit, sinon en entier, que par l'approbation écrite des laboratoires d'étalonnage de la compagnie Polycontrols inc. 3650 boul. Matte (Local A-1), Brossard (Québec), Canada, J4Y 2Z2
Tel: (450) 444-3600 Fax: (450) 444-1088 www.polycontrols.com

2018-11-22

POLYCONTROLS
INTEGRATION • CALIBRATION • INSTRUMENTATION

CLAS NRC·CNRC CLAS 2009-02

Conseil canadien des normes
Laboratoire accrédité
Portée d'accréditation 655

ISO/IEC 17025-2005 CERTIFICATION

Certificat d'étalonnage # 9786

Numéro de série:	99A274209	Station de mesure:	3
Date d'étalonnage:	2018-11-12	Procédure:	POS-CAL-005
Identification de l'instrument:	EM-130		

Instrument de mesure de référence utilisé pour l'étalonnage final

Description	Modèle	# Série	Traçabilité	Date dû
DHI molbloc (30 slpm)	3E4-VCR-V-Q	2403	1500237464	2019-04-26
DHI molbloc (100 slpm)	2E2-S	380	1500241926	2019-07-19
DHI molbox1	Molbox1	755	1500237197	2019-04-25
RTD Mist	M22	2208102	2018002234	2019-04-11
Module 44.5 PSI avec Baro 163671	Module 30	160659	2018002180	2019-04-12

Spécifications finales de l'appareil

Gaz	Air
Température d'opération	
Pression à l'entrée	
Pression à la sortie	
Température de référence	
Pression de référence	
Étendue d'échelle	0-200 ACFH
Signaux Entrée/Sortie	-
Alimentation	
Tolérance	±1 %O.R.

Condition d'étalonnage

Gaz	Air
Température ambiante	21.5 °C
Pression ambiante	1026.07 mbar
Orientation	Verticale
Élastomère	Viton
Valve	Viton

Lectures finales

Débit du test ACFH	Instrument en test ft³	Valeurs mesurées Pression PSIA	Température °C	Référence ft³	Référence calculée ft³	Erreur calculée ft³	Tolérance acceptable ft³	TUR
39.5798	6.610	14.8845	21.17	6.674	6.590	0.020	0.066	2.97
70.0656	11.700	14.9044	21.05	11.845	11.677	0.023	0.117	>4
164.1928	27.340	15.0230	20.96	27.959	27.336	0.004	0.273	>4

Bernard Poirier
Métrologiste

B Poirier
Signature

POLYCONTROLS
INTEGRATION • CALIBRATION • INSTRUMENTATION

CLAS 2009-02

Conseil canadien des normes
Laboratoire accrédité
Portée d'accréditation 655

ISO/IEC 17025-2005

Certificat d'étalonnage # 9786

Numéro de série:	99A274209	Station de mesure:	3
Date d'étalonnage:	2018-11-12	Procédure:	POS-CAL-005
Identification de l'instrument:	EM-130		

Résultats finaux

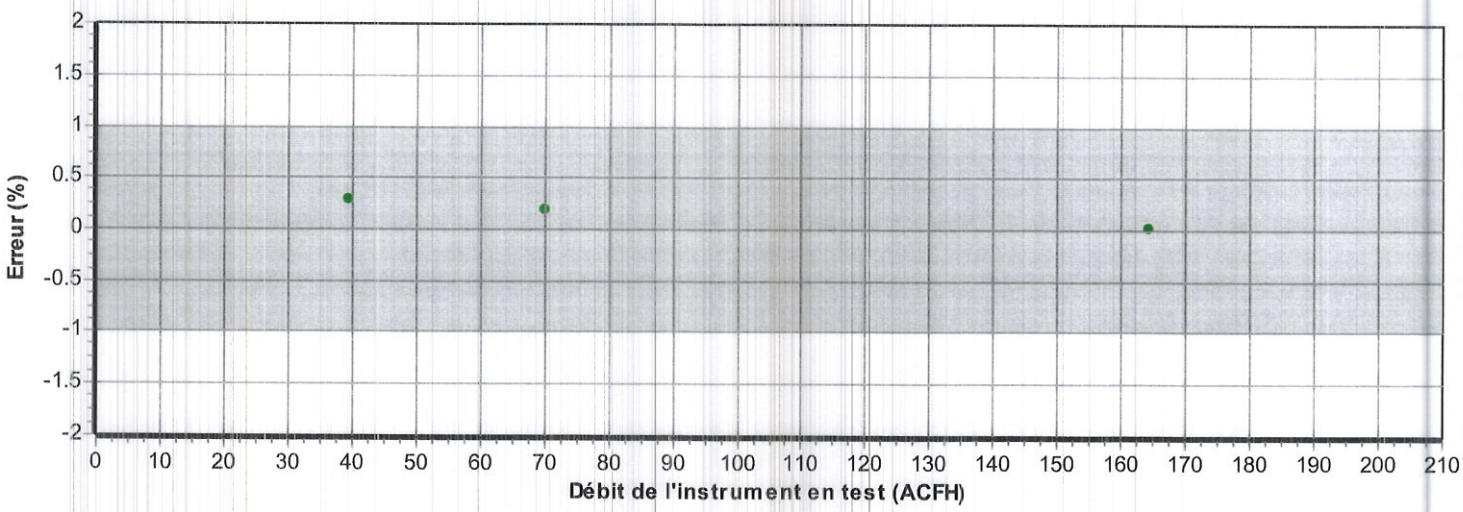

- La mesure (et son incertitude) se situe dans les tolérances
- La mesure (et son incertitude) se situe hors tolérance
- La mesure (et son incertitude) ne rencontre pas la marge de sécurité tel que spécifié dans le document G-8 de l'ILAC

Bernard Poirier
Métrologiste

Signature

POLYCONTROLS
INTEGRATION • CALIBRATION • INSTRUMENTATION

CLAS ARC·CNRC
CLAS 2009-02

Conseil canadien des normes
Laboratoire accrédité
Portée d'accréditation 655

ISO/IEC 17025-2005 CERTIFICATION

CERTIFICAT D'ÉTALONNAGE # 9799

Date d'étalonnage : 2018-11-14
Date d'émission du certificat : 2018-11-14

Services Polytests
695 B Gaudette street
St-Jean-sur-Richelieu, Québec, Canada
J3B 7S7

Étalonnage d'un
Shinigawa DCDa-2c S/N : 23544

CONFORMITÉ AU PROGRAMME DE QUALITÉ

Tous les étalonnages sont effectués conformément au manuel d'assurance qualité de Polycontrols qui est conforme à la norme ISO/IEC 17025 – 2005, à la norme ISO 9001 – 2015 ainsi qu'à tout autre exigences de qualité définies dans la description d'achat des clients.

TRAÇABILITÉ

La traçabilité des étalons de débit au National Institute of Standards and Technology, NIST, est maintenue par les laboratoires de Fluke Corporation de Phoenix, Arizona et est conforme aux normes ISO/IEC 17025, AINSI/NCSL Z540-1-1994, ISO-10012-1, MIL-STD 45662A.

Le Service d'évaluation des laboratoires d'étalonnage (CLAS) du Conseil national de recherches du Canada (CNRC) a évalué et certifié la capacité d'étalonnage du laboratoire et la traçabilité au Système international d'unités (SI) ou à des étalons acceptables selon le CLAS. Le présent certificat d'étalonnage est délivré conformément aux conditions de certification du CLAS et aux conditions d'accréditation du Conseil canadien des normes (CCN). Le CLAS et le CCN ne garantissent pas l'exactitude des étalonnages individuels effectués par les laboratoires accrédités.

APTITUDE EN MATIÈRE DE MESURE ET D'ÉTALONNAGE - CMC

Les références utilisées pour l'étalonnage de débit ont une incertitude de ±0.2% de la lecture pour les mesures entre 5 SCCM à 10 SLPM, ±0.3% de la lecture pour les mesures entre 10 SLPM à 30 SLPM, ±0.2% de la lecture pour les mesures entre 30 SLPM à 3000 SLPM, ±0.3% de la lecture pour les mesures supérieures à 3000 SLPM jusqu'à 6000 SLPM et ±0.5% pour les mesures inférieures à 5 SCCM jusqu'à concurrence de 1 SCCM, équivalent air ou azote. Les incertitudes exprimées sont élargies avec un facteur d'élargissement k = 2, et ce, pour un niveau de confiance d'environ 95 %, dans l'hypothèse d'une distribution normale incluant la résolution de l'instrument. Le rapport d'incertitude des essais (RIE) de cet étalonnage respecte un ratio de 4:1 à moins d'indication contraire.

SOMMAIRE DES CONDITIONS DE L'INSTRUMENT EN TEST

Conditions initiales	En bon état
Travail Effectué	Étalonnage de l'instrument
Résultats	Lectures initiales hors tolérance
	Lectures finales dans les tolérances
Remarques	Valeur de l'instrument corrigée = Lecture de l'indicateur de l'instrument * 0.98 K facteur
	Fréquence d'étalonnage aux 12 mois

Carl Tessier-Duncan
Métrologiste

Responsable du laboratoire

©2012 Polycontrols • Le présent document ne peut être reproduit, sinon en entier, que par l'approbation écrite des laboratoires d'étalonnage de la compagnie Polycontrols inc. 3650 boul. Matte (Local A-1), Brossard (Québec), Canada, J4Y 2Z2
Tel: (450) 444-3600 Fax: (450) 444-1088 www.polycontrols.com

2018. 11. 22

POLYCONTROLS
INTEGRATION • CALIBRATION • INSTRUMENTATION

CLAS NRC·CNRC CLAS 2009-02

Conseil canadien des normes
Laboratoire accrédité
Portée d'accréditation 655

ISO/IEC 17025-2005 CERTIFICATION

Certificat d'étalonnage # 9799

Numéro de série:	23544	Station de mesure:	4
Date d'étalonnage:	2018-11-14	Procédure:	POS-CAL-005
Identification de l'instrument:	EM-178		

Instrument de mesure de référence utilisé pour l'étalonnage initial

Description	Modèle	# Série	Traçabilité	Date dû
DHI molbloc (30 slpm)	3E4-VCR-V-Q	2359	1500231794	2019-01-19
DHI molbox1+	Molbox1+	2089	1500241952	2019-07-24
RTD Mist	Mist	L00295	2017007605	2018-12-07
Module 44.5 PSI avec Baro 163671	Module 30	160659	2018002180	2019-04-12

Spécifications initiales de l'appareil

Gaz	Air
Température d'opération	
Pression à l'entrée	
Pression à la sortie	
Température de référence	
Pression de référence	
Étendue d'échelle	10-2000 ALH
Signaux Entrée/Sortie	-
Alimentation	
Tolérance	±2 %O.R.

Condition d'étalonnage

Gaz	Air
Température ambiante	21 °C
Pression ambiante	1009.77 mbar
Orientation	Horizontale
Élastomère	Viton
Valve	

Lectures initiales

Débit du test ALH	Instrument en test L	Valeurs mesurées Pression PSIA	Température °C	Référence L	Référence calculée L	Erreur calculée L	Tolérance acceptable L	TUR
364.6385	61.8500	14.6522	21.55	60.4150	60.6869	1.1631	1.2137	>4
612.3148	104.0800	14.6557	21.47	101.7210	102.1249	1.9551	2.0425	>4
1628.8459	276.5500	14.6757	21.45	269.8463	270.5303	6.0197	5.4106	>4

Carl Tessier Dansereau
Métrologiste

Carl Tessier-Dansereau
Signature

POLYCONTROLS
INTEGRATION • CALIBRATION • INSTRUMENTATION

CLAS NRC·CNRC CLAS 2009-02

Conseil canadien des normes
Laboratoire accrédité
Portée d'accréditation 655

ISO/IEC 17025-2005 CERTIFICATION

Certificat d'étalonnage # 9799

Numéro de série:	23544	Station de mesure:	4
Date d'étalonnage:	2018-11-14	Procédure:	POS-CAL-005
Identification de l'instrument:	EM-178		

Résultats initiaux

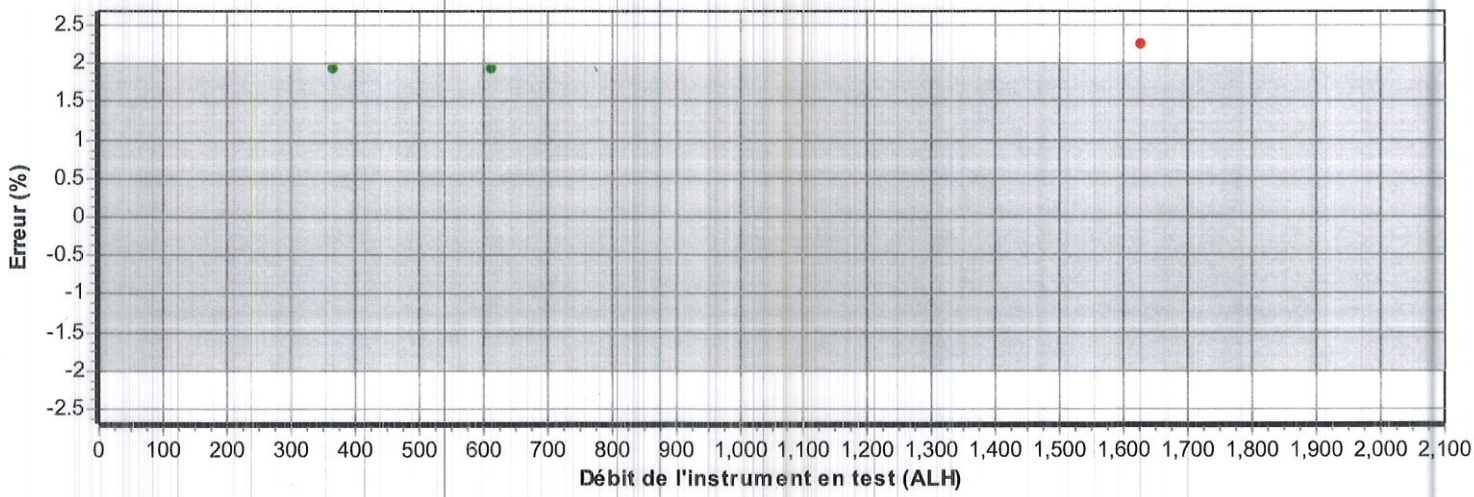

- La mesure (et son incertitude) se situe dans les tolérances
- La mesure (et son incertitude) se situe hors tolérance
- La mesure (et son incertitude) ne rencontre pas la marge de sécurité tel que spécifié dans le document G-8 de l'ILAC

Carl Tessier Dansereau
Métrologiste

Carl Tessier-Dansereau
Signature

POLYCONTROLS
INTEGRATION • CALIBRATION • INSTRUMENTATION

CLAS 2009-02 | Conseil canadien des normes Laboratoire accrédité Portée d'accréditation 655 | ISO/IEC 17025-2005 CERTIFICATION

Certificat d'étalonnage # 9799

Numéro de série:	23544	Station de mesure:	4
Date d'étalonnage:	2018-11-14	Procédure:	POS-CAL-005
Identification de l'instrument:	EM-178		

Instrument de mesure de référence utilisé pour l'étalonnage final

Description	Modèle	# Série	Traçabilité	Date dû
DHI molbloc (30 slpm)	3E4-VCR-V-Q	2359	1500231794	2019-01-19
DHI molbox1+	Molbox1+	2089	1500241952	2019-07-24
RTD Mist	Mist	L00295	2017007605	2018-12-07
Module 44.5 PSI avec Baro 163671	Module 30	160659	2018002180	2019-04-12

Spécifications finales de l'appareil

Gaz	Air
Température d'opération	
Pression à l'entrée	
Pression à la sortie	
Température de référence	
Pression de référence	
Étendue d'échelle	10-2000 ALH
Signaux Entrée/Sortie	-
Alimentation	
Tolérance	±2 %O.R.

Condition d'étalonnage

Gaz	Air
Température ambiante	21.5 °C
Pression ambiante	1025.86 mbar
Orientation	Horizontale
Élastomère	Viton
Valve	

Lectures finales

Débit du test ALH	Instrument en test L	Valeurs mesurées Pression PSIA	Température °C	Référence L	Référence calculée L	Erreur calculée L	Tolérance acceptable L	TUR
352.3959	58.5060	14.8906	21.27	59.3386	58.5953	-0.0893	1.1719	>4
614.6929	102.2940	14.9046	21.20	103.7453	102.3248	-0.0308	2.0465	>4
1597.3393	265.5408	14.9230	21.23	270.0182	266.0123	-0.4715	5.3202	>4

Fc. : 1.0100 7684

Carl Tessier Dansereau
Métrologiste

Carl Tessier Dansereau
Signature

POLYCONTROLS
INTEGRATION • CALIBRATION • INSTRUMENTATION

CLAS 2009-02

Conseil canadien des normes
Laboratoire accrédité
Portée d'accréditation 655

ISO/IEC 17025-2005 CERTIFICATION

Certificat d'étalonnage # 9799

Numéro de série:	23544	Station de mesure:	4
Date d'étalonnage:	2018-11-14	Procédure:	POS-CAL-005
Identification de l'instrument:	EM-178		

Résultats finaux

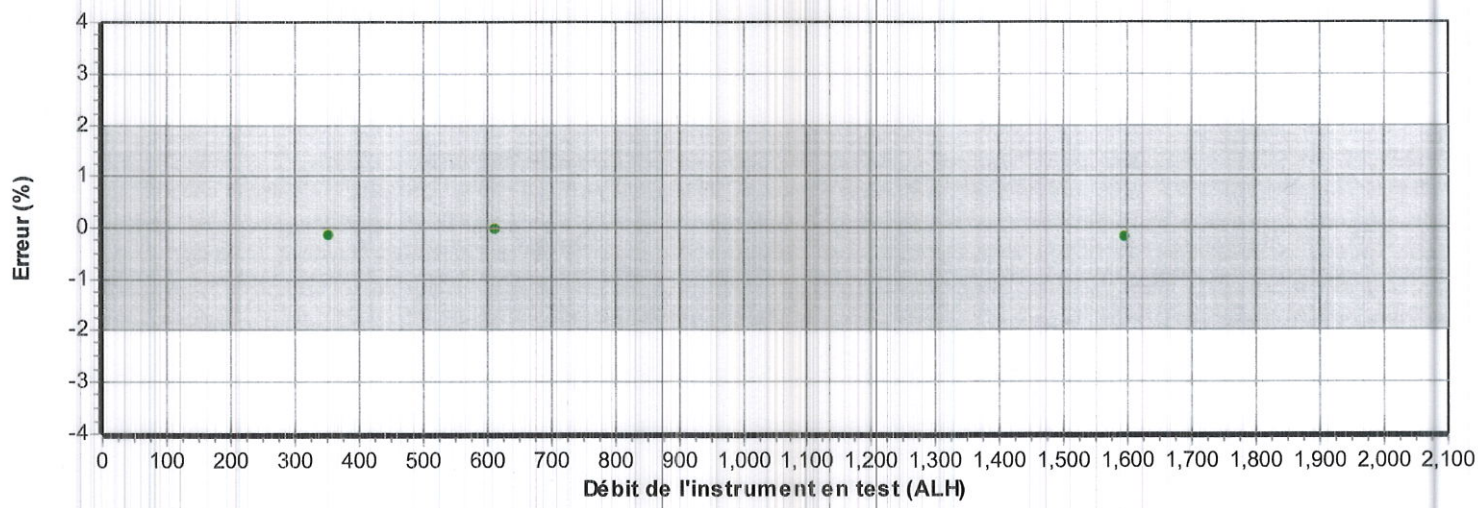

- La mesure (et son incertitude) se situe dans les tolérances
- La mesure (et son incertitude) se situe hors tolérance
- La mesure (et son incertitude) ne rencontre pas la marge de sécurité tel que spécifié dans le document G-8 de l'ILAC

Carl Tessier Dansereau
Métrologiste

Carl Tessier Dansereau
Signature

POLYCONTROLS
INTEGRATION • CALIBRATION • INSTRUMENTATION

CLAS NRC·CNRC
CLAS 2009-02

Conseil canadien des normes
Laboratoire accrédité
Portée d'accréditation 655

ISO/IEC 17025-2005 CERTIFICATION

CERTIFICAT D'ÉTALONNAGE # 9801

Date d'étalonnage : 2018-11-14
Date d'émission du certificat : 2018-11-14

Services Polytests
695 B Gaudette street
St-Jean-sur-Richelieu, Québec, Canada
J3B 7S7

Étalonnage d'un
Shinigawa DCDa-2c S/N : 23543

CONFORMITÉ AU PROGRAMME DE QUALITÉ

Tous les étalonnages sont effectués conformément au manuel d'assurance qualité de Polycontrols qui est conforme à la norme ISO/IEC 17025 – 2005, à la norme ISO 9001 – 2015 ainsi qu'à tout autre exigences de qualité définies dans la description d'achat des clients.

TRAÇABILITÉ

La traçabilité des étalons de débit au National Institute of Standards and Technology, NIST, est maintenue par les laboratoires de Fluke Corporation de Phoenix, Arizona et est conforme aux normes ISO/IEC 17025, AINSI/NCSL Z540-1-1994, ISO-10012-1, MIL-STD 45662A.

Le Service d'évaluation des laboratoires d'étalonnage (CLAS) du Conseil national de recherches du Canada (CNRC) a évalué et certifié la capacité d'étalonnage du laboratoire et la traçabilité au Système international d'unités (SI) ou à des étalons acceptables selon le CLAS. Le présent certificat d'étalonnage est délivré conformément aux conditions de certification du CLAS et aux conditions d'accréditation du Conseil canadien des normes (CCN). Le CLAS et le CCN ne garantissent pas l'exactitude des étalonnages individuels effectués par les laboratoires accrédités.

APTITUDE EN MATIÈRE DE MESURE ET D'ÉTALONNAGE - CMC

Les références utilisées pour l'étalonnage de débit ont une incertitude de ±0.2% de la lecture pour les mesures entre 5 SCCM à 10 SLPM, ±0.3% de la lecture pour les mesures entre 10 SLPM à 30 SLPM, ±0.2% de la lecture pour les mesures entre 30 SLPM à 3000 SLPM, ±0.3% de la lecture pour les mesures supérieures à 3000 SLPM jusqu'à 6000 SLPM et ±0.5% pour les mesures inférieures à 5 SCCM jusqu'à concurrence de 1 SCCM, équivalent air ou azote. Les incertitudes exprimées sont élargies avec un facteur d'élargissement k = 2, et ce, pour un niveau de confiance d'environ 95 %, dans l'hypothèse d'une distribution normale incluant la résolution de l'instrument. Le rapport d'incertitude des essais (RIE) de cet étalonnage respecte un ratio de 4:1 à moins d'indication contraire.

SOMMAIRE DES CONDITIONS DE L'INSTRUMENT EN TEST

Conditions initiales	En bon état
Travail Effectué	Lectures Initiales = Lectures finales, aucun ajustement Étalonnage de l'instrument
Résultats	Lectures initiales dans les tolérances
Remarques	Fréquence d'étalonnage aux 12 mois

Carl Tessier-Dansereau
Métrologiste

Responsable du laboratoire

©2012 Polycontrols • Le présent document ne peut être reproduit, sinon en entier, que par l'approbation écrite des laboratoires d'étalonnage de la compagnie Polycontrols inc. 3650 boul. Matte (Local A-1), Brossard (Québec), Canada, J4Y 2Z2
Tel: (450) 444-3600 Fax: (450) 444-1088 www.polycontrols.com

2018-11-22

POLYCONTROLS
INTEGRATION • CALIBRATION • INSTRUMENTATION

CLAS ARC·CNRC CLAS 2009-02

Conseil canadien des normes
Laboratoire accrédité
Portée d'accréditation 655

ISO/IEC 17025-2005 CERTIFICATION

Certificat d'étalonnage # 9801

Numéro de série:	23543	Station de mesure:	4
Date d'étalonnage:	2018-11-14	Procédure:	POS-CAL-005
Identification de l'instrument:	EM-179		

Instrument de mesure de référence utilisé pour l'étalonnage final

Description	Modèle	# Série	Traçabilité	Date dû
DHI molbloc (30 slpm)	3E4-VCR-V-Q	2359	1500231794	2019-01-19
DHI molbox1+	Molbox1+	2089	1500241952	2019-07-24
RTD Mist	Mist	L00295	2017007605	2018-12-07
Module 44.5 PSI avec Baro 163671	Module 30	160659	2018002180	2019-04-12

Spécifications finales de l'appareil

Gaz	Air
Température d'opération	
Pression à l'entrée	
Pression à la sortie	
Température de référence	
Pression de référence	
Étendue d'échelle	10-2000 ALH
Signaux Entrée/Sortie	-
Alimentation	
Tolérance	±2 %O.R.

Condition d'étalonnage

Gaz	Air
Température ambiante	21.5 °C
Pression ambiante	1027.25 mbar
Orientation	Horizontale
Élastomère	Viton
Valve	

Lectures finales

Débit du test ALH	Instrument en test L	Valeurs mesurées Pression PSIA	Température °C	Référence L	Référence calculée L	Erreur calculée L	Tolérance acceptable L	TUR
350.3144	59.1000	14.9078	21.31	59.1513	58.3496	0.7504	1.1670	>4
598.7895	101.1200	14.9160	21.26	101.1058	99.6653	1.4547	1.9933	>4
1605.3452	269.5100	14.9364	21.25	271.3957	267.1497	2.3603	5.3430	>4

Fe : 0,98730288

Carl Tessier Dansereau
Métrologiste

Carl Tessier-Dansereau
Signature

POLYCONTROLS
INTEGRATION • CALIBRATION • INSTRUMENTATION

CLAS
ARC-CNRC
CLAS 2009-02

Conseil canadien des normes
Laboratoire accrédité
Portée d'accréditation 655

ISO/IEC 17025-2005
CERTIFICATION

Certificat d'étalonnage # 9801

Numéro de série:	23543	Station de mesure:	4
Date d'étalonnage:	2018-11-14	Procédure:	POS-CAL-005
Identification de l'instrument:	EM-179		

Résultats finaux

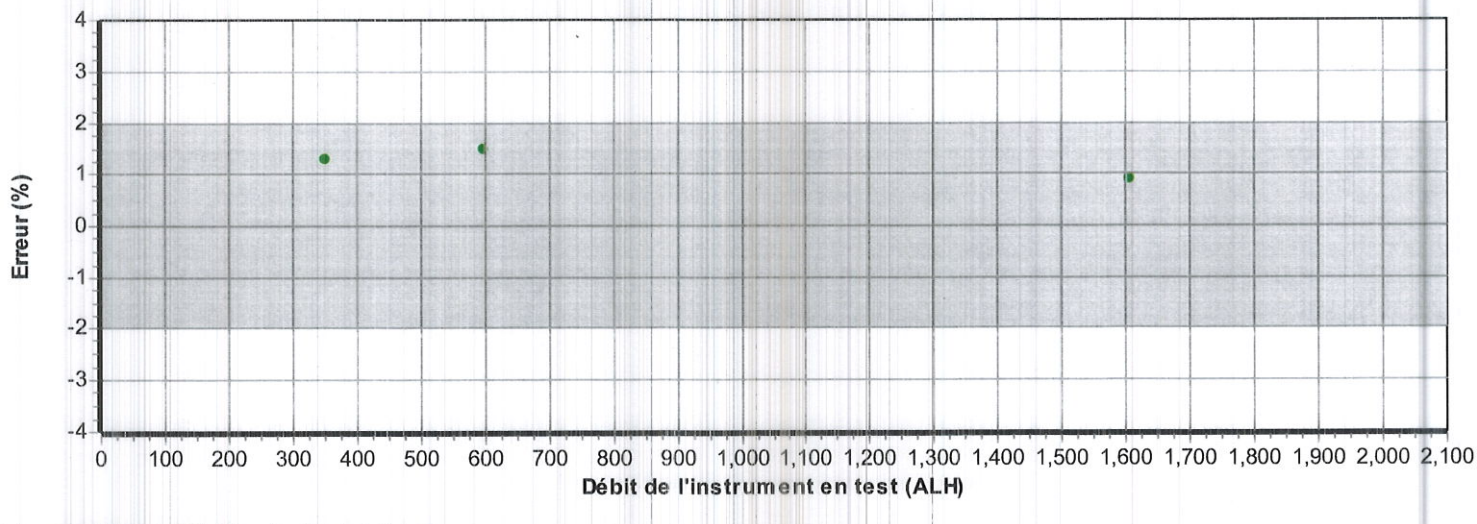

- La mesure (et son incertitude) se situe dans les tolérances
- La mesure (et son incertitude) se situe hors tolérance
- La mesure (et son incertitude) ne rencontre pas la marge de sécurité tel que spécifié dans le document G-8 de l'ILAC

Carl Tessier Dansereau
Métrologiste

Carl Tessier-Dansereau
Signature

Instrumentation
Saint•Laurent inc.
Accrédité ISO 17025

CLAS
NRC·CNRC
CLAS 2010-02

SCC Accredited LAB
LAB Accrédité CCN
N°669

80 rue de la montagne
St-Joseph du lac
(Québec), J0N 1M0
Tél: (450) 473-6169
Fax: (450) 473-5207
Email: inst.st-laurent@videotron.ca

CERTIFICAT D'ÉTALONNAGE

No.Certificat: CE-EM-015 05/03/19

CLIENT	
Compagnie:	Services Polytests Inc
Adresse:	695 B rue Gaudette
	St-Jean-sur-Richelieu, Québec, J3B 7S7

SPÉCIFICATION DE CALIBRATION	
Procédure de service:	4IN9101
Précision requise:	+\- 2°C
Fréquence d'étalonnage: (jours)	365

SPÉCIFICATION DE L'INSTRUMENT			
Type d'instrument:	Enregistreur	**Type d'entrée:**	Temp
Manufacturier:	Keithley	**Type de sortie:**	Digitale
No. Model:	7700	**Type de mesure:**	Température
No. Série:	1213648	**Gamme:**	Divers
Emplacement:	N/A	**No. Machine:**	N.A.

SPÉCIFICATION DE L'ÉTALON			
Étalon Utilisé:	Fluke 744	**No. du certificat d'étalonnage:**	2019000879
No. Série:	7798010	**Dernière date d'étalonnage:**	7-Feb-19
Certificat fait par:	Alpha Controls	**Prochaine date d'étalonnage:**	7-Feb-20
Commentaire:			

RÉSULTAT D'ÉTALONNAGE

Entrée Source	Valeur Donnée	Valeur Actuelle	Erreur de Déviation	Valeur après Étalonnage	Incertitude Élargie	Commentaire
-190.0 °C	-190.0 °C	-190.7 °C	-0.7 °C	-190.7 °C	1.0 °C	Input#1TypeK
0.0 °C	0.0 °C	-0.3 °C	-0.3 °C	-0.3 °C	1.0 °C	Input#1TypeK
750.0 °C	750.0 °C	749.8 °C	-0.2 °C	749.8 °C	1.0 °C	Input#1TypeK
100.0 °C	100.0 °C	99.7 °C	-0.3 °C	99.7 °C	1.0 °C	Input#2 TypeK
100.0 °C	100.0 °C	99.7 °C	-0.3 °C	99.7 °C	1.0 °C	Input#3 TypeK
100.0 °C	100.0 °C	99.7 °C	-0.3 °C	99.7 °C	1.0 °C	Input#4 TypeK
100.0 °C	100.0 °C	99.7 °C	-0.3 °C	99.7 °C	1.0 °C	Input#5TypeK
100.0 °C	100.0 °C	99.8 °C	-0.2 °C	99.8 °C	1.0 °C	Input#6TypeK
100.0 °C	100.0 °C	99.9 °C	-0.1 °C	99.9 °C	1.0 °C	Input#7TypeK
100.0 °C	100.0 °C	99.8 °C	-0.2 °C	99.8 °C	1.0 °C	Input#8TypeK
100.0 °C	100.0 °C	99.8 °C	-0.2 °C	99.8 °C	1.0 °C	Input#9TypeK
100.0 °C	100.0 °C	99.9 °C	-0.1 °C	99.9 °C	1.0 °C	Input#10TypeJ
100.0 °C	100.0 °C	99.8 °C	-0.2 °C	99.8 °C	1.0 °C	Input#11TypeJ
100.0 °C	100.0 °C	99.9 °C	-0.1 °C	99.9 °C	1.0 °C	Input#12TypeJ
100.0 °C	100.0 °C	99.9 °C	-0.1 °C	99.9 °C	1.0 °C	Input#13 TypeJ
100.0 °C	100.0 °C	99.9 °C	-0.1 °C	99.9 °C	1.0 °C	Input#14TypeJ
100.0 °C	100.0 °C	100.0 °C	0.0 °C	100.0 °C	1.0 °C	Input#15 TypeJ
100.0 °C	100.0 °C	99.9 °C	-0.1 °C	99.9 °C	1.0 °C	Input#16TypeJ
100.0 °C	100.0 °C	100.0 °C	0.0 °C	100.0 °C	1.0 °C	Input#17TypeJ
100.0 °C	100.0 °C	99.9 °C	-0.1 °C	99.9 °C	1.0 °C	Input#18TypeJ
100.0 °C	100.0 °C	100.0 °C	0.0 °C	100.0 °C	1.0 °C	Input#19TypeJ
100.0 °C	100.0 °C	100.1 °C	+0.1 °C	100.1 °C	1.0 °C	Input#20TypeJ
12.000 mA	12.000 mA	12.003 mA	+0.003 mA	12.003 mA	1.00 mA	Input#21
12.000 mA	12.000 mA	12.003 mA	+0.003 mA	12.003 mA	1.00 mA	Input#22

Conditions Environnementales: Température: 19 °C Humidité: 20 %RH

5F09101

Le droit d'auteur du présent certificat appartient à Inst. St-Laurent Inc et doit être reproduit intégralement, à moins d'une autorisation écrite de Inst. St-Laurent Inc.

Instrumentation Saint•Laurent inc.
Accrédité ISO 17025

CLAS 2010-02

SCC Accredited LAB
LAB Accrédité CCN
N°669

80 rue de la montagne
St-Joseph du lac
(Québec), J0N 1M0
Tél: (450) 473-6169
Fax: (450) 473-5207
Email: inst.st-laurent@videotron.ca

CERTIFICAT D'ÉTALONNAGE

No.Certificat: CE-EM-015 05/03/19

CLIENT	
Compagnie:	Services Polytests Inc
Adresse:	695 B rue Gaudette
	St-Jean-sur-Richelieu, Québec, J3B 7S7

SPÉCIFICATION DE CALIBRATION	
Procédure de service:	4IN9101
Précision requise:	+\- 2°C
Fréquence d'étalonnage: (jours)	365

SPÉCIFICATION DE L'INSTRUMENT			
Type d'instrument:	Enregistreur	**Type d'entrée:**	Temp
Manufacturier:	Keithley	**Type de sortie:**	Digitale
No. Model:	7700	**Type de mesure:**	Température
No. Série:	1213648	**Gamme:**	Divers
Emplacement:	N/A	**No. Machine:**	N.A.

Type d'Étalonnage: Test avec EM-147

Instrumentation St-Laurent Inc. Certifie que l'instrument ci-haut, rencontre ou excède les spécifications établies par le fabriquant. Le système qualité de l'entreprise est conforme aux exigences de la norme ISO 17025 et les étalons utilisés pour effectuer l'étalonnage est retraçable au CNRC et/ou au NIST. Le degré d'incertitude est basé sur un niveau de confiance=95%, K=2.

DATE D'ÉTALONNAGE / ÉMISSION DU CERTIFICAT	
Date d'Étalonnage:	5 Mars 2019
Date du prochain Étalonnage:	5 Mars 2020
Date d'émission du certificat:	5 Mars 2019

CONFORMITÉ D'ÉTALONNAGE		
	Avant	**Après**
Conforme:	X	X
Non Conforme:		

Le Service d'évaluation des laboratoires d'étalonnage (CLAS) du Conseil national de recherches du Canada (CNRC) a évalué et certifié la capacité d'étalonnage du laboratoire et la traçabilité au Système international d'unités (SI) ou à des étalons acceptables selon le CLAS. Le présent certificat d'étalonnage est délivré conformément aux conditions de certification du CLAS et aux conditions d'accréditation du Conseil canadien des normes (CCN). Numéro d'accréditation du CCN: # 669. Le CLAS et le CCN ne garantissent pas l'exactitude des étalonnages individuels effectués par les laboratoires accrédités.

Martin Langlais - Technicien

2019.03.09

5F09101

Le droit d'auteur du présent certificat appartient à Inst. St-Laurent Inc et doit être reproduit intégralement, à moins d'une autorisation écrite de Inst. St-Laurent Inc.

Instrumentation
Saint•Laurent inc.
Accrédité ISO 17025

CLAS
NRC·CNRC
CLAS 2010-02

SCC Accredited LAB
LAB
Accrédité CCN
N°669

80 rue de la montagne
St-Joseph du lac
(Québec), J0N 1M0
Tél: (450) 473-6169
Fax: (450) 473-5207
Email: inst.st-laurent@videotron.ca

CERTIFICAT D'ÉTALONNAGE

No.Certificat: CE-EM-154 05/03/19

CLIENT	
Compagnie:	Services Polytests Inc
Adresse:	695 B rue Gaudette
	St-Jean-sur-Richelieu, Québec, J3B 7S7

SPÉCIFICATION DE CALIBRATION	
Procédure de service:	4IN9101
Précision requise:	+\- 2°C
Fréquence d'étalonnage: (jours)	365

SPÉCIFICATION DE L'INSTRUMENT			
Type d'instrument:	Enregistreur	**Type d'entrée:**	Temp
Manufacturier:	Keithley	**Type de sortie:**	Digitale
No. Model:	7700	**Type de mesure:**	Température
No. Série:	1306774	**Gamme:**	Divers
Emplacement:	N/A	**No. Machine:**	N.A.

SPÉCIFICATION DE L'ÉTALON			
Étalon Utilisé:	Fluke 744	**No. du certificat d'étalonnage:**	2019000879
No. Série:	7798010	**Dernière date d'étalonnage:**	7-Feb-19
Certificat fait par:	Alpha Controls	**Prochaine date d'étalonnage:**	7-Feb-20
Commentaire:			

RÉSULTAT D'ÉTALONNAGE

Entrée Source	Valeur Donnée	Valeur Actuelle	Erreur de Déviation	Valeur après Étalonnage	Incertitude Élargie	Commentaire
-17.000 mV	-17.000 mV	-17.011 mV	-0.011 mV	-17.011 mV	0.1 mV	Input#1
0.000 mV	0.000 mV	0.055 mV	+0.055 mV	0.055 mV	0.1 mV	Input#1
20.000 mV	20.000 mV	19.931 mV	-0.069 mV	19.931 mV	0.1 mV	Input#1
30.000 mV	30.000 mV	30.006 mV	+0.006 mV	30.006 mV	0.1 mV	Input#2
Input#3 Non-Conforme						
5.000 V.DC.	5.000 V.DC.	4.999 V.DC.	-0.001 V.DC.	4.999 V.DC.	0.1 V.DC.	Input#4
30.000 mV	30.000 mV	29.990 mV	-0.010 mV	29.990 mV	0.1 mV	Input#5
30.000 mV	30.000 mV	30.031 mV	+0.031 mV	30.031 mV	0.1 mV	Input#6
100.00 Ohms	100.00 Ohms	99.99 Ohms	-0.01 Ohms	99.99 Ohms	1.0 Ohms	Input#7
100.00 Ohms	100.00 Ohms	99.98 Ohms	-0.02 Ohms	99.98 Ohms	1.0 Ohms	Input#8
100.00 Ohms	100.00 Ohms	100.02 Ohms	+0.02 Ohms	100.02 Ohms	1.0 Ohms	Input#9
100.00 Ohms	100.00 Ohms	99.98 Ohms	-0.02 Ohms	99.98 Ohms	1.0 Ohms	Input#10
100.0 °C	100.0 °C	99.7 °C	-0.3 °C	99.7 °C	1.0 °C	Input#11TypeT
100.0 °C	100.0 °C	99.7 °C	-0.3 °C	99.7 °C	1.0 °C	Input#12TypeT
100.0 °C	100.0 °C	99.8 °C	-0.2 °C	99.8 °C	1.0 °C	Input#13 TypeJ
100.0 °C	100.0 °C	99.8 °C	-0.2 °C	99.8 °C	1.0 °C	Input#14TypeJ
100.0 °C	100.0 °C	99.8 °C	-0.2 °C	99.8 °C	1.0 °C	Input#15 TypeJ
100.0 °C	100.0 °C	99.7 °C	-0.3 °C	99.7 °C	1.0 °C	Input#16TypeJ
100.00 Ohms	100.00 Ohms	99.98 Ohms	-0.02 Ohms	99.98 Ohms	1.0 Ohms	Input#17
100.00 Ohms	100.00 Ohms	99.99 Ohms	-0.01 Ohms	99.99 Ohms	1.0 Ohms	Input#18
100.00 Ohms	100.00 Ohms	99.99 Ohms	-0.01 Ohms	99.99 Ohms	1.0 Ohms	Input#19
100.00 Ohms	100.00 Ohms	99.96 Ohms	-0.04 Ohms	99.96 Ohms	1.0 Ohms	Input#20
12.000 mA	12.000 mA	12.003 mA	+0.003 mA	12.003 mA	1.00 mA	Input#21
12.000 mA	12.000 mA	12.003 mA	+0.003 mA	12.003 mA	1.00 mA	Input#22

Conditions Environnementales: Température: 19 °C Humidité: 20 %RH

5F09101

Le droit d'auteur du présent certificat appartient à Inst. St-Laurent Inc et doit être reproduit intégralement, à moins d'une autorisation écrite de Inst. St-Laurent Inc.

Instrumentation Saint•Laurent inc.
Accrédité ISO 17025

CLAS NRC·CNRC CLAS 2010-02

SCC Accredited LAB LAB Accrédité CCN N°669

80 rue de la montagne
St-Joseph du lac
(Québec), J0N 1M0
Tél: (450) 473-6169
Fax: (450) 473-5207
Email: inst.st-laurent@videotron.ca

CERTIFICAT D'ÉTALONNAGE

No.Certificat: CE-EM-154 05/03/19

CLIENT	
Compagnie:	Services Polytests Inc
Adresse:	695 B rue Gaudette
	St-Jean-sur-Richelieu, Québec, J3B 7S7

SPÉCIFICATION DE CALIBRATION	
Procédure de service:	4IN9101
Précision requise:	+\- 2°C
Fréquence d'étalonnage: (jours)	365

SPÉCIFICATION DE L'INSTRUMENT			
Type d'instrument:	Enregistreur	**Type d'entrée:**	Temp
Manufacturier:	Keithley	**Type de sortie:**	Digitale
No. Model:	7700	**Type de mesure:**	Température
No. Série:	1306774	**Gamme:**	Divers
Emplacement:	N/A	**No. Machine:**	N.A.

Type d'Étalonnage: Test avec EM-147

Instrumentation St-Laurent Inc. Certifie que l'instrument ci-haut, rencontre ou excède les spécifications établies par le fabriquant. Le système qualité de l'entreprise est conforme aux exigences de la norme ISO 17025 et les étalons utilisés pour effectuer l'étalonnage est retraçable au CNRC et/ou au NIST. Le degré d'incertitude est basé sur un niveau de confiance=95%, K=2.

DATE D'ÉTALONNAGE / ÉMISSION DU CERTIFICAT	
Date d'Étalonnage:	5 Mars 2019
Date du prochain Étalonnage:	5 Mars 2020
Date d'émission du certificat:	5 Mars 2019

CONFORMITÉ D'ÉTALONNAGE		
	Avant	**Après**
Conforme:	X	X
Non Conforme:		

Le Service d'évaluation des laboratoires d'étalonnage (CLAS) du Conseil national de recherches du Canada (CNRC) a évalué et certifié la capacité d'étalonnage du laboratoire et la traçabilité au Système international d'unités (SI) ou à des étalons acceptables selon le CLAS. Le présent certificat d'étalonnage est délivré conformément aux conditions de certification du CLAS et aux conditions d'accréditation du Conseil canadien des normes (CCN). Numéro d'accréditation du CCN: # 669. Le CLAS et le CCN ne garantissent pas l'exactitude des étalonnages individuels effectués par les laboratoires accrédités.

M Langlais

Martin Langlais - Technicien

2019-03-19

5F09101

Le droit d'auteur du présent certificat appartient à Inst. St-Laurent Inc et doit être reproduit intégralement, à moins d'une autorisation écrite de Inst. St-Laurent Inc.

4407 rue Charleroi, Montréal-Nord (Québec) H1H 1T6 Canada
TEL.: (514) 329-3242 / 1 888 774-6665
FAX : (514) 329-3750
info.canada@trescal.com

Certificat d'Étalonnage / Certificate of Calibration

CLIENT :
SERVICES POLYTESTS INC.
695-B GAUDETTE
ST-JEAN-SUR-RICHELIEU, QUEBEC

Description: VÉRIFICATEUR D'HUMIDITÉ / MOISTURE METER
Fabricant/ Manufacturer: DELMHORST
Modèle/ Model : MCS-1 REFERENCE STANDARD
No série / Serial no : N/A
 # Inventaire / Asset # : **EM-191**

CERTIFICAT No / Certificate No: **254067**

PROCÉDURE / Procedure :
TRESCAL - DELMHORST_MCS-1 REFERENCE STANDARD

aaaa - mm - jj
Date étalonnage/ Calibration Performed : 2018-12-19

Echéance/ Due Date : 2019-12-19

Type de résultat / *Results type* : **As-Found = As-Left**

Résultats d'essais / *Test results* : Conforme / In Tolerance

Conditions de mesure / Measurement conditions

TEMPÉRATURE / Temp. : **23.2°C**

HUMIDITÉ / Humidity : **28% RH**

Usage restreint/ *Restricted use* : ☐

Réparation effectuée / *Repair performed* : ☐

Ajustement effectué / *Adjustment performed* : ☐

ÉTALONS UTILISÉS/ Standards Used:

Identification	Manuf.	Model	Description	Ser. #	Etalonné/ Cal.	Echéance/ Due
PR0661	FLUKE	8508A	REFERENCE MULTIMETER	389272208	2018-07-27	2019-07-27

Les spécifications mentionnées comme limites de tolérances d'essai sont celles établies par le manufacturier, sauf indication contraire.
Test tolerance limits are based on manufacturers specifications unless stated otherwise.

NOTES :

2019. 01. 07

Technicien :
Technician

V. KOSTADINOV

Le système qualité de la société est conforme aux exigences de la norme **ISO 17025** et les étalons utilisés pour le processus d'étalonnage sont retraçables au SI par l'entremise du CNRC et/ou du NIST.
*Our quality system complies with the requirements of **ISO 17025** and the standards used for the calibration are traceable to SI through NRC and/or NIST.*

LE DROIT D'AUTEUR DE CE CERTIFICAT APPARTIENT À TRESCAL / PRIMO INSTRUMENT INC.CE CERTIFICAT NE PEUT ÊTRE REPRODUIT AUTREMENT QU'EN ENTIER ET AVEC LE CONSENTEMENT PRÉALABLE ÉCRIT DU GROUPE TRESCAL.
TRESCAL / PRIMO INSTRUMENT INC. OWN COPYRIGHT OF THIS CERTIFICATE.THE CERTIFICATE MAY NOT BE REPRODUCED OTHER THAN IN FULL EXCEPT WITH THE PRIOR WRITTEN CONSENT OF THE TRESCAL GROUP.

ACCREDITATION 17025 ISO/IEC

Trescal

Certificat d'Étalonnage
Certificate of Calibration

	254067
CLIENT / Customer :	SERVICES POLYTESTS INC.
DESCRIPTION / Description :	VÉRIFICATEUR D'HUMIDITÉ / MOISTURE METER
MANUFACTURIER / Manufacturer :	DELMHORST
MODÈLE / Model :	MCS-1 REFERENCE STANDARD

DESCRIPTION Description		LIMITES Limits	LECTURES Readings	LIMITES Limits
DOUGLAS-FIR @ 80°F	**Nominal**			**Déviation** ***Mohms***
12 %	120 MOhms		115.1	4.9
22 %	1.10 MOhms		1.099	0.001

ACCREDITATION 17025 ISO/IEC

CALIBRATION | SOLUTIONS | TO | IMPROVE | YOUR | PERFORMANCE
LA | MÉTROLOGIE | AU | SERVICE | DE | VOTRE | PERFORMANCE

www.trescal.com

Instrumentation Saint•Laurent inc.
Accrédité ISO 17025

CLAS KRC-CNRC CLAS 2010-02

SCC Accredited LAB
LAB Accrédité CCN N°669

80 rue de la montagne
St-Joseph du lac
(Québec), J0N 1M0
Tél: (450) 473-6169
Fax: (450) 473-5207
Email: inst.st-laurent@videotron.ca

CERTIFICAT D'ÉTALONNAGE

No.Certificat: CE-EM-006 06/03/19

CLIENT	
Compagnie:	Services Polytests Inc
Adresse:	695 B rue Gaudette
	St-Jean-sur-Richelieu, Québec, J3B 7S7

SPÉCIFICATION DE CALIBRATION	
Procédure de service:	4IN9106
Précision requise:	+\-0.25"H2O
Fréquence d'étalonnage: (jours)	365

SPÉCIFICATION DE L'INSTRUMENT			
Type d'instrument:	Indicateur	**Type d'entrée:**	Pression
Manufacturier:	Dwyer	**Type de sortie:**	Digitale
No. Model:	MS-321-LCD	**Type de mesure:**	Pression
No. Série:	E47U020014	**Gamme:**	0-0.5"H2O
Emplacement:	N.A.	**No. Machine:**	N.A.

SPÉCIFICATION DE L'ÉTALON			
Étalon Utilisé:	Setra	**No. du certificat d'étalonnage:**	2019001131
No. Série:	2784759	**Dernière date d'étalonnage:**	27-Feb-19
Certificat fait par:	Alpha Controls	**Prochaine date d'étalonnage:**	27-Feb-20
Commentaire:			

RÉSULTAT D'ÉTALONNAGE

Entrée Source	Valeur Donnée	Valeur Actuelle	Erreur de Déviation	Valeur après Étalonnage	Incertitude Élargie	Commentaire
0.0000 "H2O	0.000 "H2O	0.000 "H2O	0.000 "H2O	0.000 "H2O	0.25 "H2O	Vérification indicateur
0.2500 "H2O	0.250 "H2O	0.249 "H2O	-0.001 "H2O	0.249 "H2O	0.25 "H2O	Vérification indicateur
0.5000 "H2O	0.500 "H2O	0.500 "H2O	0.000 "H2O	0.500 "H2O	0.25 "H2O	Vérification indicateur
0.7500 "H2O	0.750 "H2O	0.750 "H2O	0.000 "H2O	0.750 "H2O	0.25 "H2O	Vérification indicateur
1.0000 "H2O	1.000 "H2O	0.998 "H2O	-0.002 "H2O	0.998 "H2O	0.25 "H2O	Vérification indicateur
0.0000 "H2O	0.0000 V.DC.	0.0003 V.DC.	+0.0003 V.DC.	0.0003 V.DC.	0.5 V.DC.	Vérification sortie analogique
0.2500 "H2O	2.5000 V.DC.	2.4714 V.DC.	-0.0286 V.DC.	2.4714 V.DC.	0.5 V.DC.	Vérification sortie analogique
0.5000 "H2O	5.0000 V.DC.	5.0177 V.DC.	0.0177 V.DC.	5.0177 V.DC.	0.5 V.DC.	Vérification sortie analogique
0.7500 "H2O	7.5000 V.DC.	7.5058 V.DC.	0.0058 V.DC.	7.5058 V.DC.	0.5 V.DC.	Vérification sortie analogique
1.0000 "H2O	10.0000 V.DC.	9.9982 V.DC.	-0.0018 V.DC.	9.9982 V.DC.	0.5 V.DC.	Vérification sortie analogique

Conditions Environnementales: Température: 19 °C Humidité: 20 %RH

Type d'Étalonnage:

Instrumentation St-Laurent Inc. Certifie que l'instrument ci-haut, rencontre ou excède les spécifications établies par le fabriquant. Le système qualité de l'entreprise est conforme aux exigences de la norme ISO 17025 et les étalons utilisés pour effectuer l'étalonnage est retraçable au CNRC et/ou au NIST. Le degré d'incertitude est basé sur un niveau de confiance=95%, K=2.

DATE D'ÉTALONNAGE / ÉMISSION DU CERTIFICAT	
Date d'Étalonnage:	6 Mars 2019
Date du prochain Étalonnage:	6 Mars 2020
Date d'émission du certificat:	6 Mars 2019

CONFORMITÉ D'ÉTALONNAGE	Avant	Après
Conforme:	X	X
Non Conforme:		

2019-03-19

Le Service d'évaluation des laboratoires d'étalonnage (CLAS) du Conseil national de recherches du Canada (CNRC) a évalué et certifié la capacité d'étalonnage du laboratoire et la traçabilité au Système international d'unités (SI) ou à des étalons acceptables selon le CLAS. Le présent certificat d'étalonnage est délivré conformément aux conditions de certification du CLAS et aux conditions d'accréditation du Conseil canadien des normes (CCN). Numéro d'accréditation du CCN: # 669. Le CLAS et le CCN ne garantissent pas l'exactitude des étalonnages individuels effectués par les laboratoires accrédités.

Martin Langlais - Technicien

5F09106

Le droit d'auteur du présent certificat appartient à Inst. St-Laurent Inc et doit être reproduit intégralement, à moins d'une autorisation écrite de Inst. St-Laurent Inc.

DISPERSION
Laboratoire • Laboratory DIVISION • TRANSCAT CANADA

CLAS
NRC CNRC
CLAS 2010-01

9900 Chemin de la Côte-de-Liesse, Lachine, QC H8T 1A1
www.dispersion.ca 1.866.390.5066

CERTIFICAT D'ÉTALONNAGE

Client :	Polytests	**No. du Certificat :**	**152-4BB901-181**
Adresse :	695 B rue Gaudette St-Jean-sur-Richelieu, QC J3B7S7	**Date d'étalonnage :**	09-01-2018

Technicien:
Simeonidis, Georgios

David Llorens, Responsable Qualité

DESCRIPTION DU SERVICE:

Description des masses :	ASTM E617	**Date d'approbation :**	09-01-2018
Classe de précision :	ASTM 6	**Date prochain étalonnage :**	09-01-2023
Densité :	7.95g/cm³	**Accrédtation CCN n. :**	668
Identification (si unique) :	EM-090	**Certification CLAS n. :**	2010-01

Condition d'essai :	Temp °C:	21.17	Pression kPa:	101.475	Humidité:	48.665

NOTES:

Pour l'étalonnage des masses, nous utilisons la procédure "Comparaison individuelle" PDL-09-MG-001 et la procédure "Détermination des incertitudes" PDL-09-MG-002. Le droit d'auteur du présent certificat appartient au laboratoire délivreur et doit être reproduit intégralement, à moins d'une autorisation écrite du laboratoire délivreur.

REMARQUES:

11 JAN. 2018

DISPERSION
Laboratoire • Laboratory DIVISION • TRANSCAT CANADA

CLAS 2010-01

CERTIFICAT D'ÉTALONNAGE

9900 Chemin de la Côte-de-Liesse, Lachine, QC H8T 1A1
www.dispersion.ca 1.866.390.5066

Client :	Polytests	**No. du Certificat :**	**152-4BB901-181**
Adresse :	695 B rue Gaudette	**Accrédtation CCN n. :**	668
	St-Jean-sur-Richelieu, QC	**Certification CLAS n. :**	2010-01
	J3B7S7	**Classe d'exactitude :**	ASTM 6
		Date d'étalonnage :	09-01-2018
Masse :	2 kg	**Date du prochain étalonnage :**	09-01-2023

RÉSULTAT DE L'ÉTALONNAGE, MASSE CONVENTIONNELLE:

Valeur Nominale	No de série	No d'inventaire	Masse conventionnelle	Masse conventionnelle après ajustement	Tolérance ± (mg)	Incertitudes ± (mg)
2 kg		EM-090	2.0001538 kg		200 mg	2.0 mg

S.P

DISPERSION
Laboratoire • Laboratory DIVISION • TRANSCAT CANADA

CLAS
NRC CNRC
CLAS 2010-01

CERTIFICAT D'ÉTALONNAGE

9900 Chemin de la Côte-de-Liesse, Lachine, QC H8T 1A1
www.dispersion.ca 1.866.390.5066

Client :	Polytests	**No. du Certificat :**	**152-4BB901-181**
Adresse :	695 B rue Gaudette	**Accrédtation CCN n. :**	668
	St-Jean-sur-Richelieu, QC	**Certification CLAS n. :**	2010-01
	J3B7S7	**Classe d'exactitude :**	ASTM 6
		Date d'étalonnage :	09-01-2018
Masse :	2 kg	**Date du prochain étalonnage :**	09-01-2023

RÉSULTAT DE L'ÉTALONNAGE DES POIDS, CORRECTIONS:

Valeur Nominale	No de série	No d'inventaire	Masse conventionnelle Correction	Masse conventionnelle Correction après ajustement	Tolérance ± (mg)	Incertitudes ± (mg)
2 kg		EM-090	153.8 mg		200 mg	2.0 mg

CERTIFICAT D'ÉTALONNAGE

9900 Chemin de la Côte-de-Liesse, Lachine, QC H8T 1A1
www.dispersion.ca 1.866.390.5066

BALANCES UTILISÉES

Pour l'étalonnage manuel :

> 5 kg à 25 kg :	Mettler Toledo XP32003L, SNR 1123271214, max. 32100 g, d = 0.005 g
> 1 kg à 5 kg	Mettler Toledo PR5003, SNR 1115311634, max. 5100 g, d = 0.001 g
> 300 g à 2 kg :	Mettler Toledo XP2004S, SNR B131185222, max. 2100 g, d = 0.1 mg
> 100 g à 200 g :	Mettler Toledo AT201 SNR BA1115230146, max. 205 g, d = 0.01 mg
> 5 g à 100 g :	Mettler Toledo AX106 SNR 1127063924, max. 111 g, d = 1 µg
1 mg à 5 g :	Mettler UMX5, SNR 1121103055, max. 5.1 g, d = 0.1 µg

Pour l'étalonnage automatisé :

> 200 g à 1 kg :	Mettler Toledo AX1005 SNR 1127063210, max. 1109 g, d = 0.01 mg
> 5 g à 100 g :	Mettler Toledo AX106 SNR 1120143015, max. 111 g, d = 1 µg
1 mg à 5 g :	Mettler UMX5, SNR 1125140561, max. 5.1 g, d = 0.1 µg

Les balances sont vérifiées selon notre procédure de contrôle périodique PDL-11-MG-001.

INCERTITUDES:

Les incertitudes que nous retrouvons comprennent :

1. *L'incertitude associée à l'opération de pesage.*
2. *L'incertitude associée à la densité de l'air.*
3. *L'incertitude associée à l'étalon utilisé.*
4. *L'incertitude associée à la densité de la masse à être étalonnée.*

L'incertitude de l'opération de pesage comprend la reproductibilité à long terme.

Les incertitudes précisées dans ce rapport sont des incertitudes élargies représentant un niveau de confiance d'approximativement 95 %, obtenu en multipliant ensemble l'incertitude-type composée par un facteur de couverture de k = 2. Pour de plus amples renseignements, veuillez consulter la publication GUM (Guide pour l'expression de l'incertitude de mesure, édition de 1995).

TRAÇABILITÉ

Le Service d'évaluation de laboratoires d'étalonnage (CLAS) du Conseil national de recherches du Canada (CNRC) a évalué et a certifié des capacités d'étalonnage spécifiques de ce laboratoire et leur traçabilité à des étalons nationaux de mesure reconnus et au Système international d'unités (SI). Ce certificat d'étalonnage est émis conformément aux conditions de certification accordées par CLAS et aux conditions d'accréditation accordées par le Conseil canadien des normes (CCN). Le CLAS pas plus que le CCN ne peut garantir l'exactitude des étalonnages individuels effectués par des laboratoires accrédités.

S.P

CERTIFICAT D'ÉTALONNAGE

9900 Chemin de la Côte-de-Liesse, Lachine, QC H8T 1A1
www.dispersion.ca 1.866.390.5066

RÉFÉRENCES UTILISÉES

Poids	No de série	Fabricant	Date d'étalonnage	Date due
20kg	69976	Troemner	30-05-2017	30-05-2018
5kg	129099	Mettler Toledo	02-09-2017	02-09-2018
5kg	96-0888-50-3	Denver Instrument Company	02-09-2017	02-09-2018
2kg	129098	Mettler Toledo	02-09-2017	02-09-2018
2kg	96-0888-50-3	Denver Instrument Company	02-09-2017	02-09-2018
300g	96-0888-50-2	Denver Instrument Company	02-09-2017	02-09-2018
1kg - 1mg	MT-01	Mettler Toledo	02-09-2017	02-09-2018

ÉTALONS CERTFIÉS PAR LE CNRC(**Référence NRC MS-2016-0021**)

Poids	No de série	Fabricant	Date d'étalonnage	Date due
100g	95170	Mettler Toledo	17-10-2016	17-10-2018
10kg	129100	Mettler Toledo	17-10-2016	17-10-2018
1kg	95171	Mettler Toledo	17-10-2016	17-10-2018

RÉFÉRENCES DE LA STATION ROBOTISÉE

Poids	No de série	Fabricant	Date d'étalonnage	Date due
1kg - 1mg	DK000A132	Laboratoire Dispersion	01-08-2017	01-08-2018

Instrumentation Saint•Laurent inc.
Accrédité ISO 17025

CLAS NRC·CNRC CLAS 2010-02

SCC Accredited LAB Accrédité CCN N°669

80 rue de la montagne
St-Joseph du lac
(Québec), J0N 1M0
Tél: (450) 473-6169
Fax: (450) 473-5207
Email: inst.st-laurent@videotron.ca

CERTIFICAT D'ÉTALONNAGE

No.Certificat: CE-EM-249 06/03/19

CLIENT	
Compagnie:	Services Polytests Inc
Adresse:	695 B rue Gaudette
	St-Jean-sur-Richelieu, Québec, J3B 7S7

SPÉCIFICATION DE CALIBRATION	
Procédure de service:	4IN9106
Précision requise:	+/- 0.25 "H2O
Fréquence d'étalonnage: (jours)	365

SPÉCIFICATION DE L'INSTRUMENT			
Type d'instrument:	Indicateur	**Type d'entrée:**	Pression
Manufacturier:	Dwyer	**Type de sortie:**	Voltage
No. Model:	MS-321-LCD	**Type de mesure:**	Pression
No. Série:	N/A	**Gamme:**	0 à 0.10 "H2O
Emplacement:	Banc de test	**No. Machine:**	N/A

SPÉCIFICATION DE L'ÉTALON			
Étalon Utilisé:	Setra	**No. du certificat d'étalonnage:**	2019001131
No. Série:	2784759	**Dernière date d'étalonnage:**	27-Feb-19
Certificat fait par:	Alpha Controls	**Prochaine date d'étalonnage:**	27-Feb-20
Commentaire:			

RÉSULTAT D'ÉTALONNAGE

Entrée Source	Valeur Donnée	Valeur Actuelle	Erreur de Déviation	Valeur après Étalonnage	Incertitude Élargie	Commentaire
0.0000 "H2O	0.0000 "H2O	-0.0002 "H2O	-0.0002 "H2O	0.0002 "H2O	0.25 "H2O	Vérification indicateur
0.0250 "H2O	0.0250 "H2O	0.0242 "H2O	-0.0008 "H2O	0.0242 "H2O	0.25 "H2O	Vérification indicateur
0.0500 "H2O	0.0500 "H2O	0.0491 "H2O	-0.0009 "H2O	0.0491 "H2O	0.25 "H2O	Vérification indicateur
0.0750 "H2O	0.0750 "H2O	0.0740 "H2O	-0.0010 "H2O	0.0740 "H2O	0.25 "H2O	Vérification indicateur
0.1000 "H2O	0.1000 "H2O	0.0981 "H2O	-0.0019 "H2O	0.0981 "H2O	0.25 "H2O	Vérification indicateur
0.0000 "H2O	0.0000 V.DC.	0.0006 V.DC.	+0.0006 V.DC.	0.0006 V.DC.	0.5 V.DC.	Vérification sortie analogique
0.0250 "H2O	2.5000 V.DC.	2.4262 V.DC.	-0.0738 V.DC.	2.4262 V.DC.	0.5 V.DC.	Vérification sortie analogique
0.0500 "H2O	5.0000 V.DC.	4.8990 V.DC.	-0.1010 V.DC.	4.8990 V.DC.	0.5 V.DC.	Vérification sortie analogique
0.0750 "H2O	7.5000 V.DC.	7.4021 V.DC.	-0.0979 V.DC.	7.4021 V.DC.	0.5 V.DC.	Vérification sortie analogique
0.1000 "H2O	10.0000 V.DC.	9.8114 V.DC.	-0.1886 V.DC.	9.8114 V.DC.	0.5 V.DC.	Vérification sortie analogique

Conditions Environnementales: Température: 19 °C Humidité: 16 %RH

Type d'Étalonnage:

Instrumentation St-Laurent Inc. Certifie que l'instrument ci-haut, rencontre ou excède les spécifications établies par le fabriquant. Le système qualité de l'entreprise est conforme aux exigences de la norme ISO 17025 et les étalons utilisés pour effectuer l'étalonnage est retraçable au CNRC et/ou au NIST. Le degré d'incertitude est basé sur un niveau de confiance=95%, K=2.

DATE D'ÉTALONNAGE / ÉMISSION DU CERTIFICAT	
Date d'Étalonnage:	6 Mars 2019
Date du prochain Étalonnage:	6 Mars 2020
Date d'émission du certificat:	6 Mars 2019

CONFORMITÉ D'ÉTALONNAGE	Avant	Après
Conforme:	X	X
Non Conforme:		

Le Service d'évaluation des laboratoires d'étalonnage (CLAS) du Conseil national de recherches du Canada (CNRC) a évalué et certifié la capacité d'étalonnage du laboratoire et la traçabilité au Système international d'unités (SI) ou à des étalons acceptables selon le CLAS. Le présent certificat d'étalonnage est délivré conformément aux conditions de certification du CLAS et aux conditions d'accréditation du Conseil canadien des normes (CCN). Numéro d'accréditation du CCN: # 669. Le CLAS et le CCN ne garantissent pas l'exactitude des étalonnages individuels effectués par les laboratoires accrédités.

Martin Langlais - Technicien

2019-03-19

5F09106

Le droit d'auteur du présent certificat appartient à Inst. St-Laurent Inc et doit être reproduit intégralement, à moins d'une autorisation écrite de Inst. St-Laurent Inc.

Instrumentation Saint•Laurent inc.
Accrédité ISO 17025

CLAS NRC·CNRC
CLAS 2010-02

SCC Accredited LAB
LAB Accrédité CCN
N°669

80 rue de la montagne
St-Joseph du lac
(Québec), J0N 1M0
Tél: (450) 473-6169
Fax: (450) 473-5207
Email: inst.st-laurent@videotron.ca

CERTIFICAT D'ÉTALONNAGE

No.Certificat: CE-EM-126 06/03/19

CLIENT	
Compagnie:	Services Polytests Inc
Adresse:	695 B rue Gaudette
	St-Jean-sur-Richelieu, Québec, J3B 7S7

SPÉCIFICATION DE CALIBRATION	
Procédure de service:	4IN9106
Précision requise:	+\- 1"Hg
Fréquence d'étalonnage: (jours)	365

SPÉCIFICATION DE L'INSTRUMENT			
Type d'instrument:	Manomètre	**Type d'entrée:**	Pression
Manufacturier:	Dwyer	**Type de sortie:**	Digitale
No. Model:	DPG200	**Type de mesure:**	Pression
No. Série:	N.A.	**Gamme:**	0-28"Hg
Emplacement:	N.A.	**No. Machine:**	N.A.

SPÉCIFICATION DE L'ÉTALON			
Étalon Utilisé:	Fluke 744	**No. du certificat d'étalonnage:**	2019000879
No. Série:	7798010	**Dernière date d'étalonnage:**	7-Feb-19
Certificat fait par:	Alpha Controls	**Prochaine date d'étalonnage:**	7-Feb-20
Commentaire:			

SPÉCIFICATION DE L'ÉTALON			
Étalon Utilisé:	Crystal XP2i	**No. du certificat d'étalonnage:**	2018004512
No. Série:	258139	**Dernière date d'étalonnage:**	9-Jul-18
Certificat fait par:	Alpha Controls	**Prochaine date d'étalonnage:**	9-Jul-19
Commentaire:			

RÉSULTAT D'ÉTALONNAGE

Entrée Source	Valeur Donnée	Valeur Actuelle	Erreur de Déviation	Valeur après Étalonnage	Incertitude Élargie	Commentaire
0.00 "Hg	0.00 "Hg	0.00 "Hg	0.00 "Hg	0.00 "Hg	1 "Hg	Vérification indicateur
-7.50 "Hg	-7.50 "Hg	-7.61 "Hg	-0.11 "Hg	-7.61 "Hg	1 "Hg	Vérification indicateur
-15.00 "Hg	-15.00 "Hg	-15.25 "Hg	-0.25 "Hg	-15.25 "Hg	1 "Hg	Vérification indicateur
-22.50 "Hg	-22.50 "Hg	-22.88 "Hg	-0.38 "Hg	-22.88 "Hg	1 "Hg	Vérification indicateur
-28.00 "Hg	-28.00 "Hg	-28.48 "Hg	-0.48 "Hg	-28.48 "Hg	1 "Hg	Vérification indicateur
0.00 "Hg	10.0000 V.DC.	10.0625 V.DC.	+0.0625 V.DC.	10.0625 V.DC.	0.5 V.DC.	Vérification sortie analogique
-7.50 "Hg	8.0000 V.DC.	8.0413 V.DC.	+0.0413 V.DC.	8.0413 V.DC.	0.5 V.DC.	Vérification sortie analogique
-15.00 "Hg	6.0000 V.DC.	6.0055 V.DC.	+0.0055 V.DC.	6.0055 V.DC.	0.5 V.DC.	Vérification sortie analogique
-22.50 "Hg	4.0000 V.DC.	3.9621 V.DC.	-0.0379 V.DC.	3.9621 V.DC.	0.5 V.DC.	Vérification sortie analogique
-28.00 "Hg	2.5333 V.DC.	2.4497 V.DC.	-0.0836 V.DC.	2.4497 V.DC.	0.5 V.DC.	Vérification sortie analogique

Conditions Environnementales: Température: 19 °C Humidité: 16 %RH

Type d'Étalonnage:

5F09106

Le droit d'auteur du présent certificat appartient à Inst. St-Laurent Inc et doit être reproduit intégralement, à moins d'une autorisation écrite de Inst. St-Laurent Inc.

Instrumentation Saint•Laurent inc.
Accrédité ISO 17025

CLAS NRC·CNRC CLAS 2010-02

SCC Accredited LAB
LAB Accrédité CCN N°669

80 rue de la montagne
St-Joseph du lac
(Québec), J0N 1M0
Tél: (450) 473-6169
Fax: (450) 473-5207
Email: inst.st-laurent@videotron.ca

CERTIFICAT D'ÉTALONNAGE

No.Certificat: CE-EM-126 06/03/19

CLIENT	
Compagnie:	Services Polytests Inc
Adresse:	695 B rue Gaudette
	St-Jean-sur-Richelieu, Québec, J3B 7S7

SPÉCIFICATION DE CALIBRATION	
Procédure de service:	4IN9106
Précision requise:	+\- 1"Hg
Fréquence d'étalonnage: (jours)	365

SPÉCIFICATION DE L'INSTRUMENT			
Type d'instrument:	Manomètre	**Type d'entrée:**	Pression
Manufacturier:	Dwyer	**Type de sortie:**	Digitale
No. Model:	DPG200	**Type de mesure:**	Pression
No. Série:	N.A.	**Gamme:**	0-28"Hg
Emplacement:	N.A.	**No. Machine:**	N.A.

Instrumentation St-Laurent Inc. Certifie que l'instrument ci-haut, rencontre ou excède les spécifications établies par le fabriquant. Le système qualité de l'entreprise est conforme aux exigences de la norme ISO 17025 et les étalons utilisés pour effectuer l'étalonnage est retraçable au CNRC et/ou au NIST. Le degré d'incertitude est basé sur un niveau de confiance=95%, K=2.

DATE D'ÉTALONNAGE / ÉMISSION DU CERTIFICAT	
Date d'Étalonnage:	6 Mars 2019
Date du prochain Étalonnage:	6 Mars 2020
Date d'émission du certificat:	6 Mars 2019

CONFORMITÉ D'ÉTALONNAGE	Avant	Après
Conforme:	X	X
Non Conforme:		

Le Service d'évaluation des laboratoires d'étalonnage (CLAS) du Conseil national de recherches du Canada (CNRC) a évalué et certifié la capacité d'étalonnage du laboratoire et la traçabilité au Système international d'unités (SI) ou à des étalons acceptables selon le CLAS. Le présent certificat d'étalonnage est délivré conformément aux conditions de certification du CLAS et aux conditions d'accréditation du Conseil canadien des normes (CCN). Numéro d'accréditation du CCN: # 669. Le CLAS et le CCN ne garantissent pas l'exactitude des étalonnages individuels effectués par les laboratoires accrédités.

Martin Langlais - Technicien

2019.03.19

5F09106

Le droit d'auteur du présent certificat appartient à Inst. St-Laurent Inc et doit être reproduit intégralement, à moins d'une autorisation écrite de Inst. St-Laurent Inc.

Instrumentation
Saint•Laurent inc.
Accrédité ISO 17025

CLAS
NRC·CNRC
CLAS 2010-02

SCC Accredited LAB
LAB
Accrédité CCN
N°669

80 rue de la montagne
St-Joseph du lac
(Québec), J0N 1M0
Tél: (450) 473-6169
Fax: (450) 473-5207
Email: inst.st-laurent@videotron.ca

CERTIFICAT D'ÉTALONNAGE

No.Certificat: CE-EM-127 06/03/19

CLIENT	
Compagnie:	Services Polytests Inc
Adresse:	695 B rue Gaudette
	St-Jean-sur-Richelieu, Québec, J3B 7S7

SPÉCIFICATION DE CALIBRATION	
Procédure de service:	4IN9106
Précision requise:	+\- 1"Hg
Fréquence d'étalonnage: (jours)	365

SPÉCIFICATION DE L'INSTRUMENT			
Type d'instrument:	Manomètre	**Type d'entrée:**	Pression
Manufacturier:	Dwyer	**Type de sortie:**	Digitale
No. Model:	DPG200	**Type de mesure:**	Pression
No. Série:	N.A.	**Gamme:**	0-28"Hg
Emplacement:	N.A.	**No. Machine:**	N.A.

SPÉCIFICATION DE L'ÉTALON			
Étalon Utilisé:	Fluke 744	**No. du certificat d'étalonnage:**	2019000879
No. Série:	7798010	**Dernière date d'étalonnage:**	7-Feb-19
Certificat fait par:	Alpha Controls	**Prochaine date d'étalonnage:**	7-Feb-20
Commentaire:			

SPÉCIFICATION DE L'ÉTALON			
Étalon Utilisé:	Crystal XP2i	**No. du certificat d'étalonnage:**	2018004512
No. Série:	258139	**Dernière date d'étalonnage:**	9-Jul-18
Certificat fait par:	Alpha Controls	**Prochaine date d'étalonnage:**	9-Jul-19
Commentaire:			

RÉSULTAT D'ÉTALONNAGE

Entrée Source	Valeur Donnée	Valeur Actuelle	Erreur de Déviation	Valeur après Étalonnage	Incertitude Élargie	Commentaire
0.00 "Hg	0.00 "Hg	0.00 "Hg	0.00 "Hg	0.00 "Hg	1 "Hg	Vérification indicateur
-7.50 "Hg	-7.50 "Hg	-7.49 "Hg	+0.01 "Hg	-7.49 "Hg	1 "Hg	Vérification indicateur
-15.00 "Hg	-15.00 "Hg	-14.84 "Hg	+0.16 "Hg	-14.84 "Hg	1 "Hg	Vérification indicateur
-22.50 "Hg	-22.50 "Hg	-22.57 "Hg	-0.07 "Hg	-22.57 "Hg	1 "Hg	Vérification indicateur
-28.00 "Hg	-28.00 "Hg	-27.86 "Hg	+0.14 "Hg	-27.86 "Hg	1 "Hg	Vérification indicateur
0.00 "Hg	10.0000 V.DC.	10.0152 V.DC.	+0.0152 V.DC.	10.0152 V.DC.	0.5 V.DC.	Vérification sortie analogique
-7.50 "Hg	8.0000 V.DC.	8.0359 V.DC.	+0.0359 V.DC.	8.0359 V.DC.	0.5 V.DC.	Vérification sortie analogique
-15.00 "Hg	6.0000 V.DC.	6.0757 V.DC.	+0.0757 V.DC.	6.0757 V.DC.	0.5 V.DC.	Vérification sortie analogique
-22.50 "Hg	4.0000 V.DC.	3.9980 V.DC.	-0.0020 V.DC.	3.9980 V.DC.	0.5 V.DC.	Vérification sortie analogique
-28.00 "Hg	2.5333 V.DC.	2.5845 V.DC.	+0.0512 V.DC.	2.5845 V.DC.	0.5 V.DC.	Vérification sortie analogique

Conditions Environnementales: Température: 19 °C Humidité: 16 %RH

Type d'Étalonnage:

2019-03-19

5F09106

Le droit d'auteur du présent certificat appartient à Inst. St-Laurent Inc et doit être reproduit intégralement, à moins d'une autorisation écrite de Inst. St-Laurent Inc.

Instrumentation Saint•Laurent inc.
Accrédité ISO 17025

CLAS 2010-02

SCC Accredited LAB
LAB Accrédité CCN
N°669

80 rue de la montagne
St-Joseph du lac
(Québec), J0N 1M0
Tél: (450) 473-6169
Fax: (450) 473-5207
Email: inst.st-laurent@videotron.ca

CERTIFICAT D'ÉTALONNAGE

No.Certificat: CE-EM-127 06/03/19

CLIENT	
Compagnie:	Services Polytests Inc
Adresse:	695 B rue Gaudette
	St-Jean-sur-Richelieu, Québec, J3B 7S7

SPÉCIFICATION DE CALIBRATION	
Procédure de service:	4IN9106
Précision requise:	+\- 1"Hg
Fréquence d'étalonnage: (jours)	365

SPÉCIFICATION DE L'INSTRUMENT			
Type d'instrument:	Manomètre	**Type d'entrée:**	Pression
Manufacturier:	Dwyer	**Type de sortie:**	Digitale
No. Model:	DPG200	**Type de mesure:**	Pression
No. Série:	N.A.	**Gamme:**	0-28"Hg
Emplacement:	N.A.	**No. Machine:**	N.A.

Instrumentation St-Laurent Inc. Certifie que l'instrument ci-haut, rencontre ou excède les spécifications établies par le fabriquant. Le système qualité de l'entreprise est conforme aux exigences de la norme ISO 17025 et les étalons utilisés pour effectuer l'étalonnage est retraçable au CNRC et/ou au NIST. Le degré d'incertitude est basé sur un niveau de confiance=95%, K=2.

DATE D'ÉTALONNAGE / ÉMISSION DU CERTIFICAT	
Date d'Étalonnage:	6 Mars 2019
Date du prochain Étalonnage:	6 Mars 2020
Date d'émission du certificat:	6 Mars 2019

CONFORMITÉ D'ÉTALONNAGE	Avant	Après
Conforme:	X	X
Non Conforme:		

Le Service d'évaluation des laboratoires d'étalonnage (CLAS) du Conseil national de recherches du Canada (CNRC) a évalué et certifié la capacité d'étalonnage du laboratoire et la traçabilité au Système international d'unités (SI) ou à des étalons acceptables selon le CLAS. Le présent certificat d'étalonnage est délivré conformément aux conditions de certification du CLAS et aux conditions d'accréditation du Conseil canadien des normes (CCN). Numéro d'accréditation du CCN: # 669. Le CLAS et le CCN ne garantissent pas l'exactitude des étalonnages individuels effectués par les laboratoires accrédités.

Martin Langlais - Technicien

Le droit d'auteur du présent certificat appartient à Inst. St-Laurent Inc et doit être reproduit intégralement, à moins d'une autorisation écrite de Inst. St-Laurent Inc.

DISPERSION
Laboratoire • Laboratory DIVISION - TRANSCAT CANADA

CLAS
ARC·CNRC
CLAS 2010-01

CERTIFICAT D'ÉTALONNAGE

9900 Chemin de la Côte-de-Liesse, Lachine, QC H8T 1A1
www.dispersion.ca 1.866.390.5066

Client :	Polytests	**No. du Certificat :**	**152-4BB901-182**
Adresse :	695 B rue Gaudette St-Jean-sur-Richelieu, QC J3B7S7	**Date d'étalonnage :**	09-01-2018

Technicien:
Simeonidis, Georgios

David Llorens, Responsable Qualité

DESCRIPTION DU SERVICE:

Description des masses :	ASTM E617	**Date d'approbation :**	09-01-2018
Classe de précision :	ASTM 1	**Date prochain étalonnage :**	09-01-2023
Densité :	7.95g/cm³	**Accrédtation CCN n. :**	668
Identification (si unique) :	(items multiples)	**Certification CLAS n. :**	2010-01

Condition d'essai :	Temp °C:	21.265	Pression kPa:	101.565	Humidité:	49.58

NOTES:

Pour l'étalonnage des masses, nous utilisons la procédure "Comparaison individuelle" PDL-09-MG-001 et la procédure "Détermination des incertitudes" PDL-09-MG-002. Le droit d'auteur du présent certificat appartient au laboratoire délivreur et doit être reproduit intégralement, à moins d'une autorisation écrite du laboratoire délivreur.

REMARQUES:

11 JAN. 2018

DISPERSION
Laboratoire • Laboratory DIVISION • TRANSCAT CANADA

CLAS
NRC·CNRC
CLAS 2010-01

CERTIFICAT D'ÉTALONNAGE

9900 Chemin de la Côte-de-Liesse, Lachine, QC H8T 1A1
www.dispersion.ca 1.866.390.5066

Client :	Polytests	**No. du Certificat :**	**152-4BB901-182**
Adresse :	695 B rue Gaudette	**Accréditation CCN n. :**	668
	St-Jean-sur-Richelieu, QC	**Certification CLAS n. :**	2010-01
	J3B7S7	**Classe d'exactitude :**	ASTM 1
		Date d'étalonnage :	09-01-2018
Masse :	100 mg - 200 g	**Date du prochain étalonnage :**	09-01-2023

RÉSULTAT DE L'ÉTALONNAGE, MASSE CONVENTIONNELLE:

Valeur Nominale	No de série	No d'inventaire	Masse conventionnelle	Masse conventionnelle après ajustement	Tolérance ± (mg)	Incertitudes ± (mg)
100 mg	1000014200	EM-128	99.9993 mg		0.010 mg	0.002 mg
200 g	1000026013	EM-129	199.99962 g		0.50 mg	0.10 mg

D.P.

DISPERSION
Laboratoire • Laboratory DIVISION • TRANSCAT CANADA

CLAS 2010-01

CERTIFICAT D'ÉTALONNAGE

9900 Chemin de la Côte-de-Liesse, Lachine, QC H8T 1A1
www.dispersion.ca 1.866.390.5066

Client :	Polytests	**No. du Certificat :**	**152-4BB901-182**
Adresse :	695 B rue Gaudette	**Accrédtation CCN n. :**	668
	St-Jean-sur-Richelieu, QC	**Certification CLAS n. :**	2010-01
	J3B7S7	**Classe d'exactitude :**	ASTM 1
		Date d'étalonnage :	09-01-2018
Masse :	100 mg - 200 g	**Date du prochain étalonnage :**	09-01-2023

RÉSULTAT DE L'ÉTALONNAGE DES POIDS, CORRECTIONS:

Valeur Nominale	No de série	No d'inventaire	Masse conventionnelle Correction	Masse conventionnelle Correction après ajustement	Tolérance ± (mg)	Incertitudes ± (mg)
100 mg	1000014200	EM-128	-0.0007 mg		0.010 mg	0.002 mg
200 g	1000026013	EM-129	-0.38 mg		0.50 mg	0.10 mg

D.P.

CERTIFICAT D'ÉTALONNAGE

9900 Chemin de la Côte-de-Liesse, Lachine, QC H8T 1A1
www.dispersion.ca 1.866.390.5066

BALANCES UTILISÉES

Pour l'étalonnage manuel :

> 5 kg à 25 kg :	Mettler Toledo XP32003L, SNR 1123271214, max. 32100 g, d = 0.005 g
> 1 kg à 5 kg	Mettler Toledo PR5003, SNR 1115311634, max. 5100 g, d = 0.001 g
> 300 g à 2 kg :	Mettler Toledo XP2004S, SNR B131185222, max. 2100 g, d = 0.1 mg
> 100 g à 200 g :	Mettler Toledo AT201 SNR BA1115230146, max. 205 g, d = 0.01 mg
> 5 g à 100 g :	Mettler Toledo AX106 SNR 1127063924, max. 111 g, d = 1 µg
1 mg à 5 g :	Mettler UMX5, SNR 1121103055, max. 5.1 g, d = 0.1 µg

Pour l'étalonnage automatisé :

> 200 g à 1 kg :	Mettler Toledo AX1005 SNR 1127063210, max. 1109 g, d = 0.01 mg
> 5 g à 100 g :	Mettler Toledo AX106 SNR 1120143015, max. 111 g, d = 1 µg
1 mg à 5 g :	Mettler UMX5, SNR 1125140561, max. 5.1 g, d = 0.1 µg

Les balances sont vérifiées selon notre procédure de contrôle périodique PDL-11-MG-001.

INCERTITUDES:

Les incertitudes que nous retrouvons comprennent :

1. *L'incertitude associée à l'opération de pesage.*
2. *L'incertitude associée à la densité de l'air.*
3. *L'incertitude associée à l'étalon utilisé.*
4. *L'incertitude associée à la densité de la masse à être étalonnée.*

L'incertitude de l'opération de pesage comprend la reproductibilité à long terme.

Les incertitudes précisées dans ce rapport sont des incertitudes élargies représentant un niveau de confiance d'approximativement 95 %, obtenu en multipliant ensemble l'incertitude-type composée par un facteur de couverture de k = 2. Pour de plus amples renseignements, veuillez consulter la publication GUM (Guide pour l'expression de l'incertitude de mesure, édition de 1995).

TRAÇABILITÉ

Le Service d'évaluation de laboratoires d'étalonnage (CLAS) du Conseil national de recherches du Canada (CNRC) a évalué et a certifié des capacités d'étalonnage spécifiques de ce laboratoire et leur traçabilité à des étalons nationaux de mesure reconnus et au Système international d'unités (SI). Ce certificat d'étalonnage est émis conformément aux conditions de certification accordées par CLAS et aux conditions d'accréditation accordées par le Conseil canadien des normes (CCN). Le CLAS pas plus que le CCN ne peut garantir l'exactitude des étalonnages individuels effectués par des laboratoires accrédités.

B.P.

DISPERSION
Laboratoire • Laboratory DIVISION • TRANSCAT CANADA

CLAS
ARC CNRC
CLAS 2010-01

CERTIFICAT D'ÉTALONNAGE

9900 Chemin de la Côte-de-Liesse, Lachine, QC H8T 1A1
www.dispersion.ca 1.866.390.5066

RÉFÉRENCES UTILISÉES

Poids	No de série	Fabricant	Date d'étalonnage	Date due
20kg	69976	Troemner	30-05-2017	30-05-2018
5kg	129099	Mettler Toledo	02-09-2017	02-09-2018
5kg	96-0888-50-3	Denver Instrument Company	02-09-2017	02-09-2018
2kg	129098	Mettler Toledo	02-09-2017	02-09-2018
2kg	96-0888-50-3	Denver Instrument Company	02-09-2017	02-09-2018
300g	96-0888-50-2	Denver Instrument Company	02-09-2017	02-09-2018
1kg - 1mg	MT-01	Mettler Toledo	02-09-2017	02-09-2018

ÉTALONS CERTFIÉS PAR LE CNRC(**Référence NRC MS-2016-0021**)

Poids	No de série	Fabricant	Date d'étalonnage	Date due
100g	95170	Mettler Toledo	17-10-2016	17-10-2018
10kg	129100	Mettler Toledo	17-10-2016	17-10-2018
1kg	95171	Mettler Toledo	17-10-2016	17-10-2018

RÉFÉRENCES DE LA STATION ROBOTISÉE

Poids	No de série	Fabricant	Date d'étalonnage	Date due
1kg - 1mg	DK000A132	Laboratoire Dispersion	01-08-2017	01-08-2018

Instrumentation
Saint•Laurent inc.
Accrédité ISO 17025

CLAS
NRC·CNRC
CLAS 2010-02

SCC Accredited LAB
LAB Accrédité CCN
N°669

80 rue de la montagne
St-Joseph du lac
(Québec), J0N 1M0
Tél: (450) 473-6169
Fax: (450) 473-5207
Email: inst.st-laurent@videotron.ca

CERTIFICAT D'ÉTALONNAGE

No.Certificat: CE-EM-001 06/03/19

CLIENT	
Compagnie:	Services Polytests Inc
Adresse:	695 B rue Gaudette
	St-Jean-sur-Richelieu, Québec, J3B 7S7

SPÉCIFICATION DE CALIBRATION	
Procédure de service:	4IN9101
Précision requise:	+\- 2.0°C
Fréquence d'étalonnage: (jours)	365

SPÉCIFICATION DE L'INSTRUMENT			
Type d'instrument:	Indicateur	**Type d'entrée:**	Temp
Manufacturier:	Fluke	**Type de sortie:**	Digitale
No. Model:	52-II	**Type de mesure:**	Température
No. Série:	90630037	**Gamme:**	Divers
Emplacement:	N.A.	**No. Machine:**	N.A.

SPÉCIFICATION DE L'ÉTALON			
Étalon Utilisé:	Fluke 744	**No. du certificat d'étalonnage:**	2019000879
No. Série:	7798010	**Dernière date d'étalonnage:**	7-Feb-19
Certificat fait par:	Alpha Controls	**Prochaine date d'étalonnage:**	7-Feb-20
Commentaire:			

RÉSULTAT D'ÉTALONNAGE

Entrée Source	Valeur Donnée	Valeur Actuelle	Erreur de Déviation	Valeur après Étalonnage	Incertitude Élargie	Commentaire
0.0 °C	0.0 °C	0.0 °C	0.0 °C	0.0 °C	1.0 °C	T1 typeJ
125.0 °C	125.0 °C	125.1 °C	+0.1 °C	125.1 °C	1.0 °C	T1 typeJ
250.0 °C	250.0 °C	250.1 °C	+0.1 °C	250.1 °C	1.0 °C	T1 typeJ
375.0 °C	375.0 °C	375.1 °C	+0.1 °C	375.1 °C	1.0 °C	T1 typeJ
500.0 °C	500.0 °C	500.1 °C	+0.1 °C	500.1 °C	1.0 °C	T1 typeJ
0.0 °C	0.0 °C	0.2 °C	+0.2 °C	0.2 °C	1.0 °C	T2 typeJ
125.0 °C	125.0 °C	125.1 °C	+0.1 °C	125.1 °C	1.0 °C	T2 typeJ
250.0 °C	250.0 °C	250.1 °C	+0.1 °C	250.1 °C	1.0 °C	T2 typeJ
375.0 °C	375.0 °C	375.1 °C	+0.1 °C	375.1 °C	1.0 °C	T2 typeJ
500.0 °C	500.0 °C	500.1 °C	+0.1 °C	500.1 °C	1.0 °C	T2 typeJ
0.0 °C	0.0 °C	0.2 °C	+0.2 °C	0.2 °C	1.0 °C	T1 typeK
125.0 °C	125.0 °C	125.2 °C	+0.2 °C	125.2 °C	1.0 °C	T1 typeK
250.0 °C	250.0 °C	250.1 °C	+0.1 °C	250.1 °C	1.0 °C	T1 typeK
375.0 °C	375.0 °C	375.2 °C	+0.2 °C	375.2 °C	1.0 °C	T1 typeK
500.0 °C	500.0 °C	500.1 °C	+0.1 °C	500.1 °C	1.0 °C	T1 typeK
0.0 °C	0.0 °C	0.2 °C	+0.2 °C	0.2 °C	1.0 °C	T2 typeK
125.0 °C	125.0 °C	125.2 °C	+0.2 °C	125.2 °C	1.0 °C	T2 typeK
250.0 °C	250.0 °C	250.2 °C	+0.2 °C	250.2 °C	1.0 °C	T2 typeK
375.0 °C	375.0 °C	375.2 °C	+0.2 °C	375.2 °C	1.0 °C	T2 typeK
500.0 °C	500.0 °C	500.2 °C	+0.2 °C	500.2 °C	1.0 °C	T2 typeK

Conditions Environnementales: Température: 19 °C Humidité: 16 %RH

Type d'Étalonnage:

5F09101

Le droit d'auteur du présent certificat appartient à Inst. St-Laurent Inc et doit être reproduit intégralement, à moins d'une autorisation écrite de Inst. St-Laurent Inc.

Instrumentation Saint•Laurent inc.
Accrédité ISO 17025

CLAS NRC·CNRC CLAS 2010-02

SCC Accredited LAB Accrédité CCN N°669

80 rue de la montagne
St-Joseph du lac
(Québec), J0N 1M0
Tél: (450) 473-6169
Fax: (450) 473-5207
Email: inst.st-laurent@videotron.ca

CERTIFICAT D'ÉTALONNAGE

No.Certificat: CE-EM-001 06/03/19

CLIENT	
Compagnie:	Services Polytests Inc
Adresse:	695 B rue Gaudette
	St-Jean-sur-Richelieu, Québec, J3B 7S7

SPÉCIFICATION DE CALIBRATION	
Procédure de service:	4IN9101
Précision requise:	+\- 2.0°C
Fréquence d'étalonnage: (jours)	365

SPÉCIFICATION DE L'INSTRUMENT			
Type d'instrument:	Indicateur	**Type d'entrée:**	Temp
Manufacturier:	Fluke	**Type de sortie:**	Digitale
No. Model:	52-II	**Type de mesure:**	Température
No. Série:	90630037	**Gamme:**	Divers
Emplacement:	N.A.	**No. Machine:**	N.A.

Instrumentation St-Laurent Inc. Certifie que l'instrument ci-haut, rencontre ou excède les spécifications établies par le fabriquant. Le système qualité de l'entreprise est conforme aux exigences de la norme ISO 17025 et les étalons utilisés pour effectuer l'étalonnage est retraçable au CNRC et/ou au NIST. Le degré d'incertitude est basé sur un niveau de confiance=95%, K=2.

DATE D'ÉTALONNAGE / ÉMISSION DU CERTIFICAT	
Date d'Étalonnage:	6 Mars 2019
Date du prochain Étalonnage:	6 Mars 2020
Date d'émission du certificat:	6 Mars 2019

CONFORMITÉ D'ÉTALONNAGE		
	Avant	**Après**
Conforme:	X	X
Non Conforme:		

Le Service d'évaluation des laboratoires d'étalonnage (CLAS) du Conseil national de recherches du Canada (CNRC) a évalué et certifié la capacité d'étalonnage du laboratoire et la traçabilité au Système international d'unités (SI) ou à des étalons acceptables selon le CLAS. Le présent certificat d'étalonnage est délivré conformément aux conditions de certification du CLAS et aux conditions d'accréditation du Conseil canadien des normes (CCN). Numéro d'accréditation du CCN: # 669. Le CLAS et le CCN ne garantissent pas l'exactitude des étalonnages individuels effectués par les laboratoires accrédités.

M L L

Martin Langlais - Technicien

2019-03-19

5F09101

Le droit d'auteur du présent certificat appartient à Inst. St-Laurent Inc et doit être reproduit intégralement, à moins d'une autorisation écrite de Inst. St-Laurent Inc.

Instrumentation Saint-Laurent inc.
Accrédité ISO 17025

CLAS NRC-CNRC CLAS 2010-02

SCC Accredited LAB LAB Accrédité CCN N°669

80 rue de la montagne
St-Joseph du lac
(Québec), J0N 1M0
Tél: (450) 473-6169
Fax: (450) 473-5207
Email: inst.st-laurent@videotron.ca

CERTIFICAT D'ÉTALONNAGE

No.Certificat: CE-EM-136 09/03/19

CLIENT	
Compagnie:	Services Polytests Inc
Adresse:	695 B rue Gaudette
	St-Jean-sur-Richelieu, Québec, J3B 7S7

SPÉCIFICATION DE CALIBRATION	
Procédure de service:	ISL-004
Précision requise:	+\-2°C +\-3%RH
Fréquence d'étalonnage: (jours)	365

SPÉCIFICATION DE L'INSTRUMENT			
Type d'instrument:	Hygromètre	**Type d'entrée:**	Temp/%RH
Manufacturier:	Fluke	**Type de sortie:**	Digitale
No. Model:	971	**Type de mesure:**	Temp/humidité
No. Série:	10610850	**Gamme:**	5-95%RH -20a60°C
Emplacement:	N.A.	**No. Machine:**	N.A.

SPÉCIFICATION DE L'ÉTALON			
Étalon Utilisé:	Vaisala HMI14/HMP46	**No. du certificat d'étalonnage:**	2018002178
No. Série:	T1450150/T1940011	**Dernière date d'étalonnage:**	10-Apr-18
Certificat fait par:	Alpha Controls	**Prochaine date d'étalonnage:**	10-Apr-19
Commentaire:			

RÉSULTAT D'ÉTALONNAGE

Entrée Source	Valeur Donnée	Valeur Actuelle	Erreur de Déviation	Valeur après Étalonnage	Incertitude Élargie	Commentaire
25.0 °C	25.0 °C	25.2 °C	+0.2 °C	25.2 °C	1.0 °C	
40.0 °C	40.0 °C	40.2 °C	+0.2 °C	40.2 °C	1.0 °C	
28.0 %RH	28.2 %RH	29.0 %RH	+0.8 %RH	29.0 %RH	-- %RH	
48.0 %RH	48.1 %RH	49.3 %RH	+1.2 %RH	49.3 %RH	-- %RH	
75.0 %RH	74.7 %RH	74.0 %RH	-0.7 %RH	74.0 %RH	-- %RH	

Conditions Environnementales: Température: 22 °C Humidité: 45 %RH

Type d'Étalonnage:

Instrumentation St-Laurent Inc. Certifie que l'instrument ci-haut, rencontre ou excède les spécifications établies par le fabriquant. Le système qualité de l'entreprise est conforme aux exigences de la norme ISO 17025 et les étalons utilisés pour effectuer l'étalonnage est retraçable au CNRC et/ou au NIST. Le degré d'incertitude est basé sur un niveau de confiance=95%, K=2.

DATE D'ÉTALONNAGE / ÉMISSION DU CERTIFICAT	
Date d'Étalonnage:	9 Mars 2019
Date du prochain Étalonnage:	9 Mars 2020
Date d'émission du certificat:	9 Mars 2019

CONFORMITÉ D'ÉTALONNAGE		
	Avant	**Après**
Conforme:	X	X
Non Conforme:		

Le Service d'évaluation des laboratoires d'étalonnage (CLAS) du Conseil national de recherches du Canada (CNRC) a évalué et certifié la capacité d'étalonnage du laboratoire et la traçabilité au Système international d'unités (SI) ou à des étalons acceptables selon le CLAS. Le présent certificat d'étalonnage est délivré conformément aux conditions de certification du CLAS et aux conditions d'accréditation du Conseil canadien des normes (CCN). Numéro d'accréditation du CCN: # 669. Le CLAS et le CCN ne garantissent pas l'exactitude des étalonnages individuels effectués par les laboratoires accrédités.

Martin Langlais - Technicien

2019. 03. 19

Le droit d'auteur du présent certificat appartient à Inst. St-Laurent Inc et doit être reproduit intégralement, à moins d'une autorisation écrite de Inst. St-Laurent Inc.

CERTIFICATE OF NIST TRACEABLE CALIBRATION

Calibration Certificate No: 69804

Customer Information

Customer: Services Polytests, Inc.

Address : 695-B Gaudette
St-Jean-sur-richelieu
J3B 7S7

Customer PO #: 100476

Calibration Procedure Information

Procedure ID: GTP AIRVEL Revision #: 6 Revision Date: 1/6/2013

Calibration Standards Information

Graftel ID	Manufacturer	Model #	Description	CAL Due
10086	Furness Controls	FC0332	DP Transmitter	6/6/2019
10100	Graftel	n/a	Temperature	10/29/2019
10171	Furness	FC0332-2W	0 - .4" H2O	11/10/2018
10187	Vaisala	PTB210	Barometric Pressure Gauge	11/22/2018
10157	HOBO	UX100-011	RH/Temp logger	11/10/2018

Sensor Information

Manufacturer: Omega Description: Anemometer Method Used: Pitot Tube

Model #: HHF143 Rated Accuracy: ± See Attachment Accuracy Specified By: Omega

Instrument ID#: EM153 Range: 40 to 7800 fpm Condition: Functional

Serial #: 1015949

Comments: Calibration Date: 08/16/2018 | Note: Limited calibration range = 40 to 5000 fpm
Calibration Due: 08/16/2019

The instrument(s) listed on this certificate have been calibrated against standards traceable to the National Institute of Standards & Technology (NIST) or compared to nationally or internationally recognized consensus standards. The reported calibration uncertainty has a confidence level of 95% (k=2). A calibration uncertainty ratio of 4:1 was maintained unless required uncertainty is supported by analysis. Graftel, LLC. Quality Assurance System complies with applicable requirements of ISO/IEC-17025-2005, ANSI/NCSL Z540-I-1994 and ISO 9001: 2008. All results contained within this certificate relate only to item(s) calibrated. This certificate shall not be reproduced except in full and with the written consent of Graftel, LLC. Acceptance Criteria per Simple Acceptance Rule: Measurement Uncertainty is not applied to the measured value when in/out of tolerance statement is made.

Performed By: _____ Date: 8/16/2018

Philip Davis
Calibration Technician

GRAFTEL 870 Cambridge Drive, Elk Grove Village, IL 60007 847.364.2600
www.graftel.com

ATTACHMENT TO CALIBRATION CERTIFICATE 69804
AS FOUND/AS LEFT DATA

Reading From Standard,	Lower Limit of Meter Reading,	Measured Reading From Meter,	Upper Limit of Meter Reading,	Error,	Measurement Uncertainty,	STATUS
Actual Air Velocity						
fpm	fpm	fpm	fpm	fpm	fpm	
494	488	493	500	-1	2.47	Pass
1238	1225	1236	1251	-2	6.19	Pass
1805	1786	1804	1824	-1	9.03	Pass
2448	2423	2445	2473	-3	12.24	Pass
3063	3031	3064	3095	1	15.32	Pass
3724	3686	3727	3762	3	18.62	Pass
4388	4343	4392	4433	4	21.94	Pass
4911	4861	4914	4961	3	24.56	Pass

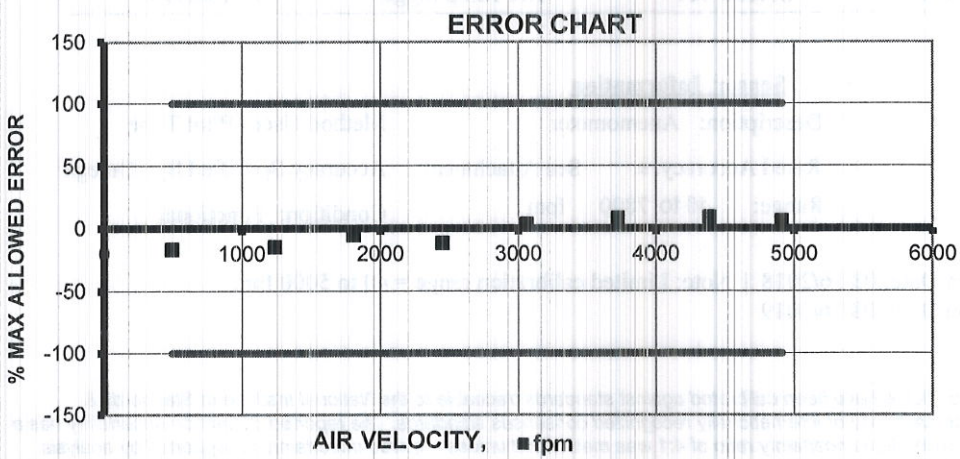

INSTRUMENT SPECIFICATIONS		
Test Fluid	Air	
Lower Range	40	fpm
Upper Range	7800	fpm
Rated Accuracy	1%Rding +1 digit	
LABORATORY AMBIENT CONDITIONS		
Pressure	14.36	psia
Humidity	56.22	% RH
Temperature	74.51	F

Flow - Humidity - Temperature - Pressure - Design - Consulting - Engineering

NIST Traceable Calibration Data Sheet

Graftel, LLC. 870 Cambridge Drive, Elk Grove Village, IL.60007
P. 847-364-2600 F. 847-364-2899

www.graftel.com

2018.08.27

4407 rue Charleroi, Montréal-Nord (Québec) H1H 1T6 Canada
TEL.: (514) 329-3242 / 1 888 774-6665
FAX : (514) 329-3750
info.canada@trescal.com

Certificat d'Étalonnage / Certificate of Calibration

CLIENT :
SERVICES POLYTESTS INC.
695-B GAUDETTE
ST-JEAN-SUR-RICHELIEU, QUEBEC

Description: CHRONOMÈTRE / STOPWATCH TIMER
Fabricant/ Manufacturer: EXTECH
Modèle/ Model : 365510
No série / Serial no : 131636
 # Inventaire / Asset # : **EM-175**

CERTIFICAT No / Certificate No: **254068**

PROCÉDURE / Procedure :
TRESCAL - EXTECH_365510

Date étalonnage/ Calibration Performed : 2018-12-20

Echéance/ Due Date : 2019-12-20

Type de résultat / *Results type* : **As-Found = As-Left**

Résultats d'essais / *Test results* : Conforme / In Tolerance

Conditions de mesure / Measurement conditions

TEMPÉRATURE / Temp. : **22°C**

HUMIDITÉ / Humidity : **23% RH**

Usage restreint/ *Restricted use* : ☐

Réparation effectuée / *Repair performed* : ☐

Ajustement effectué / *Adjustment performed* : ☐

ÉTALONS UTILISÉS/ Standards Used:

Identification	Manuf.	Model	Description	Ser. #	Etalonné/ Cal.	Echéance/ Due
PR0313	H-P	53132A	UNIVERSAL COUNTER	3546A03142	2018-07-03	2019-07-03
PR0392	AGILENT	33250A	FUNCTION/ARBITRARY WAVEFORM GENERATOR	MY40008014	2017-06-19	2019-06-19

Les spécifications mentionnées comme limites de tolérances d'essai sont celles établies par le manufacturier, sauf indication contraire.
Test tolerance limits are based on manufacturers specifications unless stated otherwise.

NOTES :

2019-01-07

Technicien :
Technician

Y. MEFTAH

Le système qualité de la société est conforme aux exigences de la norme **ISO 17025** et les étalons utilisés pour le processus d'étalonnage sont retraçables au SI par l'entremise du CNRC et/ou du NIST.
*Our quality system complies with the requirements of **ISO 17025** and the standards used for the calibration are traceable to SI through NRC and/or NIST.*

LE DROIT D'AUTEUR DE CE CERTIFICAT APPARTIENT À TRESCAL / PRIMO INSTRUMENT INC.CE CERTIFICAT NE PEUT ÊTRE REPRODUIT AUTREMENT QU'EN ENTIER ET AVEC LE CONSENTEMENT PRÉALABLE ÉCRIT DU GROUPE TRESCAL.
TRESCAL / *PRIMO INSTRUMENT INC. OWN COPYRIGHT OF THIS CERTIFICATE.THE CERTIFICATE MAY NOT BE REPRODUCED OTHER THAN IN FULL EXCEPT WITH THE PRIOR WRITTEN CONSENT OF THE TRESCAL GROUP.*

ACCREDITATION 17025 ISO/IEC

Réf : [illegible]

CALIBRATION | SOLUTIONS | TO | IMPROVE | YOUR | PERFORMANCE
LA | MÉTROLOGIE | AU | SERVICE | DE | VOTRE | PERFORMANCE
www.trescal.com

Trescal

Certificat d'Étalonnage
Certificate of Calibration

	254068
CLIENT / Customer :	SERVICES POLYTESTS INC.
DESCRIPTION / Description :	CHRONOMÈTRE / STOPWATCH TIMER
MANUFACTURIER / Manufacturer :	EXTECH
MODÈLE / Model :	365510

DESCRIPTION Description	LIMITES Limits	LECTURES Readings	LIMITES Limits
	Min	Comptes / Counts Chronomètre/timer 162060	Max

Temps écoulé, chronomètre sous test / Elapsed time on test stopwatch

Minutes	Seconds	1/100 sec
27	0	60

Total au compteur / Reference timer: 162058.0 comptes/counts

(Δt) Deviation (1/100sec): 2.00

Deviation Par jour/ Per day (%):	0.0012 %	* Secondes	Deviation 24hrs	* Secondes
Deviation Par jour/ Per day (sec):	**1.07 sec**	-3.00	**1.07**	3.00

* Tolérances basées sur une déviation maximale de 3 sec/jour
* Tolerances based on a 3 sec/day maximum deviation

Incertitude/ Uncertainty: ±37 ms

Lorsque fournies dans le rapport, les incertitudes de mesure sont des incertitudes élargies représentant un niveau de confiance d'approximativement 95% , obtenu en multipliant l'incertitude-type composée par un facteur de couverture de k=2.
When supplied in the report, the measurement uncertainties are expanded uncertainties representing a confidence level of approximately 95% , obtain by multiplying the combined standard uncertainty by a coverage factor of k=2.

ACCREDITATION 17025 ISO/IEC

Instrumentation Saint•Laurent inc.

80 rue de la montagne
St-Joseph du lac
(Québec), J0N 1M0
Tél: (450) 473-6169
Fax: (450) 473-5207
Email: inst.st-laurent@videotron.ca

CERTIFICAT D'ÉTALONNAGE

No.Certificat: CE-EM-224 06/03/19

CLIENT	
Compagnie:	Services Polytests Inc
Adresse:	695 B rue Gaudette
	St-Jean-sur-Richelieu, Québec, J3B 7S7

SPÉCIFICATION DE CALIBRATION	
Procédure de service:	ISL-022
Précision requise:	+/- 1/32"
Fréquence d'étalonnage: (jours)	365

SPÉCIFICATION DE L'INSTRUMENT			
Type d'instrument:	Ruban à mesurer	**Type d'entrée:**	Mesure
Manufacturier:	Stanley	**Type de sortie:**	N/A
No. Model:	Leverlock 12'	**Type de mesure:**	Inch
No. Série:	N/A	**Gamme:**	0 à 12'
Emplacement:	Portable	**No. Machine:**	N/A

SPÉCIFICATION DE L'ÉTALON			
Étalon Utilisé:	Tape Mesure	**No. du certificat d'étalonnage:**	TA-47525320
No. Série:	17413592	**Dernière date d'étalonnage:**	23-Oct-17
Certificat fait par:	Starrett	**Prochaine date d'étalonnage:**	23-Oct-19
Commentaire:			

RÉSULTAT D'ÉTALONNAGE

Entrée Source	Valeur Donnée	Valeur Actuelle	Erreur de Déviation	Valeur après Étalonnage		Commentaire
1.00 "	1.00 "	1.00 "	0.00 "	1.00 "		
36.00 "	36.00 "	36.00 "	0.00 "	36.00 "		
72.00 "	72.00 "	72.00 "	0.00 "	72.00 "		
108.00 "	108.00 "	108.00 "	0.00 "	108.00 "		
132.00 "	132.00 "	132.00 "	0.00 "	132.00 "		

Conditions Environnementales: Température: 19 °C Humidité: 16 %RH

Commentaire:

Instrumentation St-Laurent Inc. Certifie que l'instrument ci-haut, rencontre ou excède les spécifications établies par le fabriquant. Les étalons utilisés pour effectuer l'étalonnage est retraçable au CNRC et/ou au NIST.

DATE D'ÉTALONNAGE / ÉMISSION DU CERTIFICAT	
Date d'Étalonnage:	6 Mars 2019
Date du prochain Étalonnage:	6 Mars 2020
Date d'émission du certificat:	6 Mars 2019

CONFORMITÉ D'ÉTALONNAGE	Avant	Après
Conforme:	X	X
Non Conforme:		

Martin Langlais - Technicien

2019.03.19

Le droit d'auteur du présent certificat appartient à Inst. St-Laurent Inc et doit être reproduit intégralement, à moins d'une autorisation écrite de Inst. St-Laurent Inc.

Rapport d'étalonnage No. CA0124-510-092818

Mettler Toledo
Service Business Unit Industrial
1900 Polaris Parkway
Columbus, Ohio 43240
1-800-METTLER

Accrédité par l'American Association for Laboratory Accreditation (A2LA)
CERT.CALIBRATION #1902.02

METTLER TOLEDO

ISO 9001 Registered

ANSI/NCSL Z540-1 Accrédité

Certificat d'étalonnage

Client

Société :	Services Polytests		
Adresse :	695-B Rue Gaudette		
Ville :	Saint-Jean-Sur-Richelieu	*État/Province :*	Quebec
Code postal :	J3B 7S7	Astea Customer ID:	301288671

Instrument

Constructeur :	RICE LAKE	*Modèle de terminal :*	N/A
Modèle :	em257	*# série du terminal:*	N/A
No de série :	C66221	*# série de l'imprimant*	N/A
Capacité :	1000 kg		N/A
Résolution :	0.05 kg	*Nbre de Divisions:*	20000
Classe :	III	*Procédure utilisée :*	NIST Handbook 44
No./ID d'inventaire:	EM256		
Procédure:	Le présent certificat est émis conformément aux conditions de certification accordées par l'A2LA, en vertu de la norme ISO/IEC 17025. A2LA a évalué la capacité de mesure du laboratoire et la traçabilité des normes nationales reconnues.		

Date de calibrage :	28-Sep-2018	*Date, prochaine Cal.*	30-Sep-2019
Signataire autorisé (A2LA) :	Pier-Hugues Riopel	*Signature:*	ELECTRONIC SIGNATURE

Étalons de travail

Retracabilité: Les poids de test utilisés se réfèrent au National Institute of Standards and Technology.

Jeu de poids no :	*Traçabilité NIST No.:*	*Classe ASTM/OIML*	*Date d'étalonnage :*	*Date proch. étalonnage*
160941929	4350-8126171	Temperature Kit	18-Nov-2016	18-Nov-2018
42273	M17-0562	M1	23-Jan-2018	23-Jan-2019
T101-T150 (20kg)	1412537	M1	19-Apr-2018	19-Apr-2019

2018-10-02

Version Logiciel : 4.6.4.2

© METTLER TOLEDO

Toute reproduction partielle du certificat est interdite, sous réserve du consentement écrit préalable du laboratoire émetteur.

Résultats de mesure

La température : 22 °C

Les conditions ambiantes ont été vérifiées afin d'assurer l'exactitude de l'étalonnage.

Test de variation

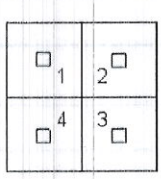

		Avant Réglage
Poids Appliqués	*Position*	*Valeur lue*
1: 200 kg	*Position 1*	200.00 kg
2: 200 kg	*Position 2*	200.00 kg
3: 200 kg	*Position 3*	199.95 kg
4: 200 kg	*Position 4*	199.95 kg
Erreur maximum :		0.05 kg
Max Erreur Admissible :		0.15 kg

Linéarité

	Avant réglage					
	Poids Appliqués	*Valeur lue*	*Erreur*		*Erreur admissible*	*Dans la Tolérance*
Zero 1	0.00 kg	0.00 kg	0.00 kg	0 d	1 d	YES
2	0.50 kg	0.50 kg	0.00 kg	0 d	1 d	YES
3	2.00 kg	2.00 kg	0.00 kg	0 d	1 d	YES
4	10.00 kg	9.95 kg	-0.05 kg	1 d	1 d	YES
Max 5	100.00 kg	100.00 kg	0.00 kg	0 d	2 d	YES

☐ Méthode de substitution utilisée

Un réglage de la balance a été requis
Si non, les résultats "avant réglage" correspondent aux résultats tel que laissé.

☐ OUI ☑ NON

© METTLER TOLEDO

Toute reproduction partielle du certificat est interdite, sous réserve du consentement écrit préalable du laboratoire émetteur.

Répétabilité

Poids appliqués : 2.00 kg

	Chargé	*Vide*	*Différence*
1	2.00 kg	0.00 kg	2 kg
2	2.00 kg	0.00 kg	2 kg
3	2.00 kg	0.00 kg	2 kg
	Erreur maximale :	0.00 kg	0.0 d
	Tolérance :	0.05 kg	1 d

Incertitude

Mesure de l'incertitude = 0.029 kg

L'incertitude de mesure représente les incertitudes étendues selon un facteur de sécurité K=2 générant un niveau de confiance approximatif de 95 %. Des dispositions doivent être prises en matière d'environnement au lieu d'étalonnage, d'incertitude induite par l'article en étalonnage et d'effets indésirables causés par le transport du matériel d'étalonnage. Ces facteurs pourraient entraîner une incertitude plus grande que le CMC.

© METTLER TOLEDO

Toute reproduction partielle du certificat est interdite, sous réserve du consentement écrit préalable du laboratoire émetteur.

Certificat de Pesée Minimale

Incertitude de mesure élargie

U = Uo
Ur1 = 0.03 kg

Exemple d'incertitudes élargies pour différentes valeurs de poids net :

Poids Net Affiché	*Incertitude de mesure élargie*	
1 kg	0.03 kg	2.90000 %
10 kg	0.03 kg	0.29000 %
100 kg	0.03 kg	0.02900 %
500 kg	0.03 kg	0.00580 %
1000 kg	0.03 kg	0.00290 %

Explication sur le tableau de pesée minimale

Les valeurs du poids net affiché indiquées dans le tableau suivant sont les valeurs des pesées minimales. Pour ces valeurs, l'incertitude élargie de mesure, multipliée par un Facteur de Sécurité (1, 2, 3 ou 5) est inférieure ou égale à l'Erreur Relative R

Tableau des Pesées Minimales pour différentes Erreurs Relatives et différents Facteurs de Sécurité

	Facteur de Sécurité FS			
Erreur Relative Requise	*1x FS = 1*	*2x FS = 2*	*3x FS = 3*	*5x FS = 5*
0.1 %	29.00 kg	58.00 kg	87.00 kg	145.00 kg
0.2 %	14.50 kg	29.00 kg	43.50 kg	72.50 kg
0.5 %	5.80 kg	11.60 kg	17.40 kg	29.00 kg
1 %	2.90 kg	5.80 kg	8.70 kg	14.50 kg
2 %	1.45 kg	2.90 kg	4.35 kg	7.25 kg
5 %	0.58 kg	1.16 kg	1.74 kg	2.90 kg

Remarques sur les valeurs de pesée minimale du tableau ci-dessus :

1. "N/A" est indiqué dans le tableau quand aucune valeur appropriée n'a pu être calculée.
2. Pour les instrument à étendues et échelons multiples, les valeurs indiquées dans le tableau ci-dessus s'appliquent à la plus petite étendue de mesure.
3. METTLER TOLEDO ne peut être tenu pour responsable du choix retenu concernant la sélection de l'Erreur Relative Requise ou du Facteur de Sécurité.
4. Le client veille à ce que les paramètres de réglage restent identiques à ceux utilisés pour l'établissement de ce Constat de Vérification Standard.
5. Le client veille à ce que l'environnement demeure identique aux conditions de travail retenues pour l'établissement de ce Constat de Vérification Standard.

Remarques

None.

© METTLER TOLEDO

Toute reproduction partielle du certificat est interdite, sous réserve du consentement écrit préalable du laboratoire émetteur.

22 Albiston Way
Auburn, ME 04210
800-292-6218
207-777-6218
Fax 207-777-6215
www.specair.com

Date: 08/14/2017

Certificate of Analysis

Customer:
VAC OXY

Results are reported in mole percent, unless otherwise indicated. Mixes are prepared via partial pressure methods, or gravimetrically, using high load high sensitivity electronic scales. Prior to use, scales are verified for accuracy using applicable NIST traceable weights; analyses are calibrated against reference materials traceable to NIST weights and/or NIST gas reference materials.

Cylinder Serial #: 809277 **Cylinder Size:** K **CGA Connection:** 350 **Fill Pressure:** 1450 PSI

Analysis: Certified Standard **Lot #:** 4722621

Component(s):	Requested Concentration(s):	Actual Concentration(s):
Carbon Monoxide	3%	3.0%
Carbon Dioxide	18%	18.0%
Oxygen	2%	2.0%
Nitrogen	BALANCE	BALANCE

Expiration Date: 08/2020

Approved By:

Tom Bosse

EM-275

5. sept 2017

The information contained herein has been prepared at your request by qualified experts. While we believe that the information is accurate within the limits of the analytical methods employed, and is complete to the extent of the specific analyses performed, we make no warranty or representation as to the suitability of the use of the information for any particular purpose. The information is offered with the understanding that any use of the information is at the sole discretion and risk of the user. In no event shall the liability arising out of the use of the information contained herein exceed the fee established for providing such information.

22 Albiston Way
Auburn, ME 04210
800-292-6218
207-777-6218
Fax 207-777-6215
www.specair.com

Date: 08/14/2017

Certificate of Analysis

Customer:
VAC OXY

Results are reported in mole percent, unless otherwise indicated. Mixes are prepared via partial pressure methods, or gravimetrically, using high load high sensitivity electronic scales. Prior to use, scales are verified for accuracy using applicable NIST traceable weights; analyses are calibrated against reference materials traceable to NIST weights and/or NIST gas reference materials.

Cylinder Serial #: K3886 **Cylinder Size:** K **CGA Connection:** 590 **Fill Pressure:** 1450 PSI

Analysis: Certified Standard **Lot #:** 4722622

Component(s):	Requested Concentration(s):	Actual Concentration(s):
Carbon Monoxide	1%	1.0%
Carbon Dioxide	10%	10.0%
Oxygen	10%	10.0%
Nitrogen	BALANCE	BALANCE

Expiration Date: 08/2020

Approved By:

Tom Bosse

5 sept 2017

EM. 276

The information contained herein has been prepared at your request by qualified experts. While we believe that the information is accurate within the limits of the analytical methods employed, and is complete to the extent of the specific analyses performed, we make no warranty or representation as to the suitability of the use of the information for any particular purpose. The information is offered with the understanding that any use of the information is at the sole discretion and risk of the user. In no event shall the liability arising out of the use of the information contained herein exceed the fee established for providing such information.

EM-303
EM-304

Calibration complies with ISO/IEC 17025, ANSI/NCSL Z540-1, and 9001

ACCREDITED A2LA Certificate No. 1750.01 Calibration

Cert. No.: 4199-10569957

Traceable® Certificate of Calibration for Dial Barometer

Manufactured for and distributed by : Control Company 12554 Galveston Rd B230, Webster, TX 77598

Instrument Identification:

Model: 4199, S/N: 192343395 Manufacturer: Control Company

Standards/Equipment:

Description	Serial Number	Due Date	NIST Traceable Reference
Digital Barometer	D4540001	22 Oct 2019	1000432773

Certificate Information:

Technician: 57 Procedure: CAL-33 Cal Date: 17 Jul 2019 Cal Due Date: 17 Jul 2021

Test Conditions: 64.68%RH 23.57°C 1017mBar

Calibration Data: (New Instrument)

Unit(s)	Nominal	As Found	In Tol	Nominal	As Left	In Tol	Min	Max	±U	TUR
mb/hPa	N.A.	N.A.		960.02	960	Y	955	965	0.62	>4:1
mb/hPa	N.A.	N.A.		985.80	986	Y	981	991	0.62	>4:1
mb/hPa	N.A.	N.A.		1014.51	1013	Y	1010	1020	0.62	>4:1

This certificate indicates Traceability to standards provided by (NIST) National Institute of Standards and Technology and/or a National Standards Laboratory.

A Test Uncertainty Ratio of at least 4:1 is maintained unless otherwise stated and is calculated using the expanded measurement uncertainty. Uncertainty evaluation includes the instrument under test and is calculated in accordance with the ISO "Guide to the Expression of Uncertainty in Measurement : (GUM). The uncertainty represents an expanded uncertainty using a coverage factor k=2 to approximate a 95% confidence level. In tolerance conditions are based on test results falling within specified limits with no reduction by the uncertainty of the measurement. The results contained herein relate only to the item calibrated. This certificate shall not be reproduced except in full, without written approval of Control Company.

Nominal=Standard's Reading; As Left=Instrument's Reading; In Tol=In Tolerance; Min/Max=Acceptance Range; ± U=Expanded Measurement Uncertainty; TUR=Test Uncertainty Ratio; Accuracy=±(Max-Min)/2; Min=As Left Nominal(Rounded) – Tolerance; Max= As Left Nominal(Rounded) + Tolerance;

Nicol Rodriguez, Quality Manager

Aaron Judice, Technical Manager

Note :

Maintaining Accuracy:

In our opinion once calibrated your Dial Barometer should maintain its accuracy. There is no exact way to determine how long calibration will be maintained. Dial Barometer change little, if any at all, but can be affected by aging, temperature, shock, and contamination.

Recalibration:

For factory calibration and re-certification traceable to National Institute of Standards and Technology contact Control Company.

Août 2019

CONTROL COMPANY 12554 Galveston RD Suite B230 Webster TX USA 77598
Phone 281 482-1714 Fax 281 482-9448 sales@control3.com www.control3.com

Control Company is an ISO/IEC 17025:2005 Calibration Laboratory Accredited by (A2LA) American Association for Laboratory Accreditation, Certificate No. 1750.01.
Control Company is ISO 9001:2008 Quality Certified by DNV GL, Certificate No. CERT-01805-2006-AQ-HOU-ANAB.
International Laboratory Accreditation Cooperation (ILAC) - Multilateral Recognition Arrangement (MRA).

Traceable® is a registered trademark of Control Company

© 2017 Control Company

APPENDIX 4: Unit pre burn

November 7, 2023

Rafael Sanchez, Ph.D.
Wood Heater Program Lead
Air Branch
Monitoring, Assistance, and Media Programs Division
Office of Compliance
U.S. Environmental Protection Agency (EPA)
Room 7149-D
1200 Pennsylvania Ave., NW
MS: 2227A
Washington, DC 20004

Submittal of preliminary preconditioning moisture data

Dear Dr. Sanchez,

As discussed during our June 8th 2022 call, to address the lack of conditioning test fuel moisture, Hearthstone submits the following documentation with the intention to adequately demonstrate that the wood used during preconditioning of our Green Mountain 40 8640 model stove was within the required moisture specification.

The original preconditioning data submitted with the certification application on page 208-226 of the CBI report took place from 01/4/2019-01/30/2019 onsite at Hearthstone and collected a total of 51.3 hours of data.

To explain where the appendix data was collected from, the following is an explanation of our internal testing and preconditioning process which ensure that all wood used for testing and preconditioning is within the appropriate moisture range.
We have three test stands onsite which replicate the equipment needed at a certified lab to properly run Method 28, and we use these stands to do development testing and tuning of our prototype stoves. During our development testing, we replicate the full Method 28 test requirements and procedures. Because of this, we record fuel weights, moisture, piece length and many other data points on a daily basis for the various different projects being worked on. Our test fuel is exclusively Douglas Fir, which we must import in bundles of 85 pieces at a time from the Pacific North West for our testing since the wood is not available locally. When the wood is received, each piece is checked for moisture, and any pieces below the proper moisture range are discarded as they are useless for testing. Pieces which are over 19% moisture are stored in our humidity-controlled wood storage room. As testing proceeds, each piece is checked on a weekly basis to chart the moisture loss and ensure that all stored wood remains above the 19% moisture threshold for testing. All test and preconditioning wood are pulled from this one source; therefore, we are entirely confident that the preconditioning wood used in the 8640 was within the required moisture range.

In the following Appendix, we have gathered data from other woodstove development testing which was being performed in the same timeframe at Hearthstone.

Sincerely,

Simon Booth
Engineering Manager
sbooth@hearthstonestoves.com
802.851.4044
Hearthstone Quality Home Heating Products
317 Stafford Ave, Morrisville VT 05661

Appendix

Test date: 01/17/2019

Date:	01 | 17 | 2019
Test Engineer:	CFM
Run #	F
Train	2

Changes To Stove: Rebuilt, fully gasketed, ash grate patched, no ash grate frame, no blower, 75 sq ft

g/hr.	2.69
kg/hr.	2.08
Efficiency	66.4
Δ T:	73

Piece #	Piece Size			Meter Moisture Content, Dry %		
				Top	Bottom	Side
	Thick (in)	Width (in)	Length (in)	Uncor	Uncor	Uncor
1	1.5	3.5	15	21.9	22.0	22.3
2	1	1	1	23.2	22.4	22.7
3				22.6	22.2	22.3
4	3.5	3.5		22.0	22.0	23.4
5						
6						

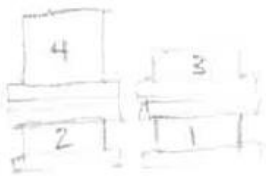

Test date: 01/18/2019

Date:	01 | 18 | 2019
Test Engineer:	CFM
Run #	4
Train	2

Changes To Stove:

g/hr.	4.37
kg/hr.	1.05
Efficiency	68.5
Δ T:	90

Piece #	Piece Size			Meter Moisture Content, Dry %		
				Top	Bottom	Side
	Thick (in)	Width (in)	Length (in)	Uncor	Uncor	Uncor
1	1.5	3.5	15	20.1	19.6	19.8
2	1	1	1	20.8	21.0	21.1
3				22.0	21.6	22.0
4	3.5	3.5		20.3	21.4	20.9
5						
6						

Test date: 01/28/2019

Date:	1/28/2019
Test Engineer:	CFM
Run #	H

Test Fuel: Douglas Fir, Untreated, Air Dried, Standard Grade or Better, Dimensional Lumber, 19% to 25% Moisture Dry Basis

Piece #	Piece Size			Meter Moisture Content, Dry %			Avg. Corrected (%)
	Thick (in)	Width (in)	Length (in)	Top	Bottom	Side	
1	1.5	3.5	15	20.6	20.4	21.5	20.83
2	1.5	3.5	15	20.3	20.1	20.4	20.27
3	1.5	3.5	15	22.0	22.0	22.0	22.00
4	3.5	3.5	15	24.4	23.8	24.6	24.27
5							0.00
6							
7							
8							
9							
10							

hearthstone

hearthstone

Catalyst Preconditioning

Model: GM40

Date: 1/30/2019

Total: 51.3 hours

Test Engineer: D.Bryant

All fuel is Doug Fir, 15-25% Moisture, Dry basis

Date	Time	ET (min)	Scale (lbs)	Flue Temp (ºF)	Cat Temp (ºF)
1/4/2019	9:00 AM	5	8.99	325	680
		10	8.91	276	735
		15	8.6	277	790
		20	8.29	287	827
		25	7.61	343	1224
		30	6.79	362	1203
		35	6.09	378	1281
		40	5.26	391	1331
		45	4.59	397	1342
		50	3.78	400	1347
		55	3.17	394	1339
		60	2.69	382	1270
		65	2.29	367	1169
		70	1.98	351	1057
		75	1.67	332	999
		80	1.56	316	977
		85	1.48	304	949
		90	1.36	295	937
		95	1.29	288	928
		100	1.19	284	930
		105	1.09	277	891
		110	0.96	275	918
		115	0.93	274	932
		120	0.79	273	936
		125	0.78	273	934
		130	0.7	271	930
		135	0.59	271	927

		140	0.48	270	929
		145	0.37	269	926
		150	0.37	267	913
		155	0.29	266	889
		160	0.2	260	854
		165	0.08	257	862
		170	0.07	255	859
		175	0	254	866
1/7/2019	9:00 AM	0	10.18	353	819
		5	9.9	317	880
		10	9.58	315	882
		15	9.09	335	1206
		20	8.28	379	1308
		25	7.39	392	1282
		30	6.58	403	1340
		35	5.77	415	1380
		40	4.98	417	1351
		45	4.19	415	1368
		50	3.55	405	1241
		55	2.98	393	1221
		60	2.51	384	1303
		65	2.18	364	1106
		70	1.97	343	1028
		75	1.79	327	992
		80	1.69	314	965
		85	1.56	304	943
		90	1.48	294	911
		95	1.37	287	921
		100	1.28	282	918
		105	1.08	278	905
		110	1.09	277	902
		115	0.97	274	903
		120	0.89	273	924
		125	0.78	271	919
		130	0.69	270	902
		135	0.58	268	889

		140	0.47	265	883
		145	0.37	263	891
		150	0.3	262	880
		155	0.19	261	884
		160	0.08	261	890
		165	0.09	261	891
		170	0	259	888
1/8/2019	10:00 AM	0	8.29	242.76	698
		5	8.18	245	699
		10	7.88	226	770
		15	7.61	238	910
		20	6.98	287	1141
		25	6.29	308	1227
		30	5.59	321	1257
		35	4.88	330	1252
		40	4.31	332	1281
		45	3.68	334	1260
		50	3.19	329	1228
		55	2.69	316	1145
		60	2.26	306	1099
		65	2.09	287	1006
		70	1.88	272	953
		75	1.68	260	960
		80	1.47	254	1011
		85	1.37	248	949
		90	1.28	237	899
		95	1.3	230	880
		100	1.17	224	886
		105	1.08	220	897
		110	0.99	216	845
		115	1	212	843
		120	0.83	209	848
		125	0.82	207	857
		130	0.66	207	885
		135	0.68	207	902
		140	0.59	207	865

		145	0.57	205	886
		150	0.49	205	891
		155	0.39	205	873
		160	0.4	203	824
		165	0.28	199	803
		170	0.28	196	837
		175	0.19	196	852
		180	0.19	195	830
		185	0.05	193	791
		190	0.08	191	798
		195	0.08	189	800
		200	0	187	792
1/10/2019	8:00 AM	0	10.09	359.33	856
		5	9.78	338	803
		10	9.49	328	833
		15	8.79	379	1139
		20	8.2	385	1207
		25	7.39	415	1335
		30	6.5	423	1311
		35	5.67	436	1406
		40	4.89	449	1480
		45	3.89	452	1426
		50	3.2	448	1426
		55	2.57	432	1199
		60	2.24	414	1189
		65	1.88	392	1067
		70	1.7	374	1020
		75	1.49	356	981
		80	1.38	342	954
		85	1.3	332	950
		90	1.1	326	953
		95	0.98	321	936
		100	0.87	317	919
		105	0.78	312	905
		110	0.68	307	884
		115	0.58	301	872

		120	0.5	297	857
		125	0.38	295	866
		130	0.3	294	876
		135	0.18	294	868
		140	0.17	290	868
		145	0.16	286	846
		150	0.15	283	845
		155	0.13	280	840
		160	0.11	276	836
		165	0.09	273	833
1/14/2019	9:00 AM	0	3.4	386	1091
		5	4.7	397	1089
		10	4.1	406	1039
		15	3.5	418	1221
		20	3	429	1255
		25	2.4	416	1071
		30	2.1	399	994
		35	1.8	381	951
		40	1.7	373	934
		45	2.1	332	1064
		50	1.8	297	902
		55	2.6	351	888
		60	2.2	340	896
		65	1.9	336	922
		70	1.6	330	889
		75	1.6	321	848
		80	1.6	311	796
		85	1.5	296	750
		90	1.5	285	719
		95	1.4	275	698
		100	1.3	268	684
		105	1.2	262	671
		110	1.9	403	538
		115	1.4	435	561
		120	1.2	358	549
		125	1.2	328	532

		130	1.1	308	520
		135	0.9	298	507
		140	1	286	501
1/25/2019	9:30 AM				
		0	4.5	317	992
		20	3.4	328	933
		30	2.7	337	919
		40	4.7	304	922
		50	4.1	300	1057
		60	3.4	292	956
		70	2.8	314	1415
		80	2.2	327	930
		90	6.8	395	1016
		100	5.7	386	996
		110	4.6	407	1055
		120	3.6	390	991
		130	2.9	370	929
		140	2.3	351	868
		150	2	336	864
		160	1.7	324	850
		170	4.6	359	1087
		180	3.4	413	1248
		190	4.3	402	984
		200	3.4	352	1107
		210	2.8	322	928
		220	4.2	315	896
		230	3.7	303	901
		240	3.3	288	853
		250	3	276	817
		260	6.2	298	1030
		270	5.8	302	949
		280	5	311	940
		290	4.2	302	917
		300	3.5	316	1002
		310	6.3	303	935
		320	5.5	313	975

330	4.9	305	940
340	4.2	297	904
350	3.8	289	1056
360	3.6	285	943
370	3.4	273	967
380	3.3	251	738
390	7.4	257	872
400	14.4	285	1058
410	13.5	341	1128
420	12.2	385	1255
430	10.8	395	1222
440	9.2	404	1159
450	7.9	395	1141
460	6.8	374	1149
470	6.1	345	1000
480	5.6	323	980
490	5.4	303	923
500	5.2	291	878
510	5	274	808
520	4.9	264	777
530	4.6	255	763
540	4.6	245	713
550	4.5	236	690
560	4.4	230	679
570	4.4	226	667
580	4.2	222	657
590	4	218	637
600	3.9	214	637
610	3.8	212	616
620	3.7	209	609
630	3.6	205	591
640	3.6	201	578
650	3.5	199	571
660	3.4	196	559
670	3.3	193	548
680	3.2	191	536
690	3.2	187	517

		700	3.1	183	510
		705	3	180	502
1/28/2019	10:00 AM	0	3.9	367	626
		5	3.6	336	879
		10	3.3	349	882
		15	3	340	806
		20	2.6	337	846
		25	5.1	361	953
		30	4.6	371	1008
		35	4.1	379	1027
		40	3.5	406	1123
		45	3.1	406	1109
		50	2.5	411	1124
		55	6.5	374	1179
		60	6	358	1061
		65	5.4	349	1009
		70	5	347	1033
		75	4.6	343	1003
		80	4.2	332	1047
		85	3.8	325	950
		90	3.5	317	942
		95	3.2	312	929
		100	3	306	946
		105	4.8	333	1128
		110	4.5	328	1048
		115	4.1	328	1031
		120	3.8	323	960
		125	3.6	313	1016
		130	3.3	312	1025
		135	3.1	310	1050
		140	2.9	313	1066
		145	2.8	298	889
		150	2.6	289	886
		155	2.5	280	848
		160	2.5	270	821

165	2.4	264	805
170	2.3	256	790
175	2.2	251	791
180	2.1	248	772
185	2.1	246	767
190	3.4	261	746
195	3	293	1033
200	2.7	307	981
205	2.4	289	888
210	2.2	279	864
215	2.1	275	871
220	2	270	835
225	2.1	262	798
230	2	254	774
235	1.8	248	754
240	1.8	243	746
245	4.1	261	917
250	3.8	277	903
255	3.4	295	939
260	3.1	294	903
265	2.7	289	880
270	2.6	278	835
275	2.4	272	841
280	2.2	267	843
285	2.1	262	792
290	2	256	755
295	1.9	250	768
300	1.9	242	731
305	1.8	236	722
310	1.7	231	706
315	1.7	228	699
320	6.5	240	630
325	6.2	250	798
330	5.9	268	877
335	5.6	277	877
340	5.1	291	928
345	4.6	313	1042

350	4.1	331	1024
355	3.6	326	972
360	3.3	315	925
365	3	304	918
370	2.9	292	861
375	2.7	283	818
380	2.5	274	791
385	2.4	266	800
390	2.4	261	791
395	2.3	253	769
400	2.2	246	742
405	2.2	239	725
410	2	233	704
415	2.1	228	692
420	2	223	678
425	2	220	668
430	11.9	230	809
435	11.9	242	911
440	11.6	258	1022
445	11.3	292	878
450	10.7	313	1020
455	10.2	317	1050
460	9.6	325	1113
465	9.1	339	1112
470	8.6	343	1072
475	8.2	345	1102
480	7.6	349	1134
485	7	368	1204
490	6.5	379	1212
495	6	375	1190
500	5.6	362	1172
505	5.1	364	1193
510	4.7	361	1138
515	4.5	338	973
520	4.2	326	993
525	4	313	933
530	4	301	891

		535	3.8	293	901
		540	3.8	283	860
		545	3.7	274	830
		550	3.6	266	806
		555	3.5	260	790
		560	3.4	255	782
		565	3.2	251	769
		570	3.3	248	752
		575	3.2	241	737
		580	3.1	239	737
		585	3	236	714
		590	3	232	702
		595	2.9	230	700
		600	2.9	228	682
		605	2.8	225	667
		610	2.8	222	656
		615	2.7	219	650
		620	2.6	216	646
		625	2.7	215	630
		630	2.5	212	628
		635	2.4	210	612
		640	2.5	208	594
		645	2.4	205	584
		650	2.5	203	579
		655	2.5	200	570
		660	2.3	197	556
		665	2.3	195	548
		670	2.3	191	541
		675	2.2	189	532
		680	2.1	187	523
		685	2.2	185	517
		690	2.1	183	512
		695	2.1	180	504
		700	2	178	502
1/29/2019	10:00 AM	0	7.1	447	768

5	6.4	358	983
10	6	366	1001
15	5.4	372	990
20	4.9	375	997
25	4.5	386	1069
30	4	394	1173
35	3.4	403	1126
40	3	402	1123
45	2.6	395	1061
50	2.3	385	1033
55	6.2	397	964
60	5.6	414	1120
65	5	423	1107
70	4.5	414	1251
75	4.3	341	996
80	4	321	943
85	3.7	313	937
90	3.4	306	902
95	3.2	302	906
100	2.9	295	897
105	2.8	285	864
110	2.6	280	1026
115	2.6	277	963
120	5.7	288	950
125	5.3	298	934
130	4.9	306	967
135	4.6	302	946
140	4.3	302	995
145	4.1	296	938
150	3.8	292	908
155	3.6	289	892
160	3.5	291	1059
165	3.3	292	1044
170	5.7	300	881
175	5.4	297	911
180	5	299	909
185	4.8	297	885

190	4.5	296	883
195	4.2	295	884
200	3.9	287	873
205	3.8	284	885
210	3.5	284	889
215	3.4	286	1007
220	3.3	277	882
225	3.2	260	848
230	3.2	260	818
235	3.1	253	796
240	3	246	777
245	2.9	240	774
250	2.9	238	752
255	2.8	235	738
260	2.7	232	742
265	2.7	230	758
270	2.6	229	758
275	2.5	228	762
280	2.5	227	765
285	2.4	224	754
290	2.2	223	722
295	7	240	690
300	6.7	267	946
305	6.1	295	1004
310	5.8	312	1091
315	5.2	328	1097
320	4.7	331	1132
325	4.5	313	1023
330	4.3	311	1087
335	4.1	306	1090
340	4	302	1058
345	3.8	297	1040
350	3.7	293	1030
355	3.5	289	1032
360	3.5	286	1027
365	3.3	283	1002
370	3.1	276	921

375	6.8	295	942
380	6.2	329	1114
385	5.5	347	1047
390	4.7	351	1012
395	4.1	346	1135
400	3.9	325	1053
405	3.6	316	998
410	3.5	297	921
415	3.5	290	967
420	3.4	280	929
425	3.2	271	881
430	3.2	262	838
435	3.2	254	816
440	3.1	248	795
445	3.1	242	777
450	3	237	775
455	2.9	234	768
460	2.9	231	756
465	4.9	248	826
470	4.4	279	1036
475	3.9	307	1053
480	3.6	302	964
485	3.5	284	915
490	3.2	275	855.39
495	3.1	271	913.68
500	3.1	266	863.98
505	3.1	259	805.53
510	3.1	250	781.23
515	2.9	245	767
520	2.9	240	763.8
525	2.8	237	750.04
530	2.8	232	728.86
535	2.7	229	717.55
540	2.6	226	706.09
545	2.6	223	699.2
550	2.5	220	699.89
555	2.6	218	705.7

		560	2.6	218	708.91
		565	2.5	216	709.75
		570	2.4	215	694.92
		575	2.4	212	677.22
		580	2.3	210	663.06
		585	2.3	207	657.12
		590	2.2	205	659.52
		595	2.2	203	639.58
		600	2.3	200	618.7
		605	2.2	197	608.89
		610	2.1	194	602.99
		615	2.1	191	579.84
		620	2.1	189	574.15
		625	2.1	187	567.9
		630	2	184	563.41
		635	2	183	555.17
		640	2	181	557.79
		645	2	180	549.51
		650	1.9	178	542.26
		655	1.9	176	538.22
		660	1.9	175	528.7
		665	1.9	172	528.67
		670	1.8	171	537.92
		675	1.8	170	520.79
		680	1.8	168	515.01
		685	1.8	166	509.39
		690	1.7	164	505.71
		695	1.7	163	503.44
		700	1.6	161	502.21
		705	1.6	159	500.23
1/30/2019	9:00 AM				
		0	9.5	419	699
		5	9.1	442	786
		10	8.2	483	855
		15	7.4	507	850
		20	6.5	524	887

25	5.6	539	917
30	4.7	557	981
35	3.8	567	1030
40	3	566	1006
45	2.4	551	1006
50	1.9	534	962
55	1.5	506	897
60	1.3	478	840
65	1.2	458	810
70	1.2	445	797
75	0.8	436	786
80	0.8	428	771
85	0.7	423	764
90	0.6	419	762
95	0.4	415	744
100	0.3	413	738
105	0.2	412	737
110	0.2	408	726
115	0.1	404	721
120	0	400	715

TOTAL: **3080** **(51.3 hours)**

June 15, 2022

Rafael Sanchez, Ph.D.
Wood Heater Program Lead
Air Branch
Monitoring, Assistance, and Media Programs Division
Office of Compliance
U.S. Environmental Protection Agency (EPA)
Room 7149-D
1200 Pennsylvania Ave., NW
MS: 2227A
Washington, DC 20004

RE: Response to Deficiency Letter – Letter 210-19
Submittal of preliminary preconditioning moisture data

Dear Dr. Sanchez,

As discussed during our June 8th call, Hearthstone submits the following documentation with the intention to adequately demonstrate that the wood used during preconditioning of our GM40 8640 model stove was within the required moisture specification.

The original preconditioning data submitted with the certification application on page 225 of the CBI report took place from 1/4/2019-1/30/2019 onsite at Hearthstone and collected a total of 51.3 hours of data.

To explain where the appendix data was collected from, the following is an explanation of our internal testing and preconditioning process which ensure that all wood used for testing and preconditioning is within the appropriate moisture range.
We have three test stands onsite which replicate the equipment needed at a certified lab to properly run Method 28, and we use these stands to do development testing and tuning of our prototype stoves. During our development testing, we replicate the full Method 28 test requirements and procedures. Because of this, we record fuel weights, moisture, piece length and many other data points on a daily basis for the various different projects being worked on. Our test fuel is exclusively Douglas Fir, which we must import in bundles of 85 pieces at a time from the Pacific North West for our testing since the wood is not available locally. When the wood is received, each piece is checked for moisture, and any pieces below the proper moisture range are discarded as they are useless for testing. Pieces which are over 19% moisture are stored in our humidity-controlled wood storage room. As testing proceeds, each piece is checked on a weekly basis to chart the moisture loss and ensure that all stored wood remains above the 19% moisture threshold for testing. All test and preconditioning wood are pulled from this one source; therefore, we are entirely confident that the preconditioning wood used in the 8640 was within the required moisture range.

In the following Appendix, we have gathered data from other woodstove development testing which was being performed in the same timeframe at Hearthstone. We have included excerpts of handwritten data collected by a test engineer, as well as the computer-generated data from our data collection system. Additionally, I attach the raw data files to demonstrate untampered data sources.

Sincerely,
Simon Booth
Engineering Manager
sbooth@hearthstonestoves.com
802.851.4044
Hearthstone Quality Home Heating Products
317 Stafford Ave, Morrisville VT 05661

hearthstone

Appendix

Test date: 1/17/2019

hearthstone

Stove Operation Data

Category Goal: 4

Model: 8392
Date: 01/17/2019
Test Engineer: CFM
Run #: F
Train: 2

Changes To Stove: Rebuilt, fully gasketed, ash grate gasketed, no ash grate frame, no blower, 75 sccfh

Results	
g/hr.	2.69
kg/hr.	2.08
Efficiency	66.4
ΔT:	73

Piece #	Piece Size			Meter Moisture Content, Dry %		
				Top	Bottom	Side
	Thick (in)	Width (in)	Length (in)	Uncor	Uncor	Uncor
1	1.5	3.5	15	24.9	22.0	22.5
2	1	1	1	23.3	22.4	22.1
3				22.6	22.0	22.2
4	3.5	3.5		22.0	22.0	23.4
5						
6						

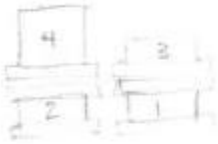

Pre-Test Weights		Post Test Weights			
Probe (g)	Filters (g)	Probe (g)	Filters (g)	O-Rings (g)	
117.8459	0.3603	117.8458	0.3638	4.3319 / 4.3315	
117.8459	0.3603	117.8457	0.3638	4.3322 / 4.3315	
117.8458	0.3603	117.8456	0.3638	4.3318 / 4.3315	Total MG: 5.30

Load Weight	Avg Corr %
10.40	22.55

* 8x filters - stuck together

Warm-Up and Preburn Air Settings:

Primary air set to full open for all warm-up/preburn charges. Then set to FULL at start of preburn

Bypass closed @ N/A

Secondary air setting: STOCK

Coal Bed Range: 2.08 - 2.60 *

Preburn Weight Up: N/A

Preburn Start Weight: N/A

Fan:

Fan Speed Setting: N/A

ON / OFF during warm-up

ON / OFF first _____ minutes of test

ON / OFF during preburn

ON / OFF balance of test run

Charcoal Bed Preparation:

Kindling: 24 Paper: TORCH

Number Of Warm-ups: 2 Includes Preburn Load

Warm-up Load Weight, s: 11.36 2.92 - 1.60

All preburn/warm up fuel pieces were either: 11 or 15 inches long

Charcoal bed leveled @ 1 to 2 minutes before start of test. In stove 33 sec.

Test Start Weight: 24 Test Start Temp: ~540

Test:

Door wide open during loading 48 (time) After loading, door cracked — inches for — (time, from door opened)

Primary Air: Opened full for first 5 min., then set to run setting of FULL

Vac Test ☒

Category (W/P/T)	Time	Notes
W	1335	loading lt, door cracked 1"
	1345	warmup load in, door cracked 1/2"
	1406	door shut
	1450	pb in
	1456	bed down, (pb stopped)
	1559	test started

hearthstone

Test date: 01/18/2019

hearthstone

Stove Operation Data

Category Goal: 2

Model: 8392
Date: 01 | 18 | 2019
Test Engineer: CFM
Run #: 4
Train: 2

Changes To Stove

Results	
g/hr.	4.37
kg/hr.	1.05
Efficiency	68.5
Δ T:	90

Piece #	Piece Size			Meter Moisture Content, Dry %		
				Top	Bottom	Side
	Thick (in)	Width (in)	Length (in)	Uncor	Uncor	Uncor
1	1.5	3.5	15	20.1	19.6	19.8
2	1	1	1	20.8	21.0	21.1
3	1	1	1	22.0	21.6	22.0
4	3.5	3.5	1	20.3	21.4	20.9
5						
6						

Pre-Test Weights		Post Test Weights			Load Weight	Avg Corr %
Probe (g)	Filters (g)	Probe (g)	Filters (g)	O-Rings (g)	9.72	20.88
117.8459	0.2392	117.8456	0.2536	0.2599 & 0.2586		
117.8469	0.2393	117.8456	0.2537	0.2598 & 0.2595		
117.8460	0.2393	117.8456	0.2538	0.2598 & 0.2586	Total MG:	15.67

Warm-Up and Preburn Air Settings:

Primary air set to full open for all warm-up/preburn charges — Then set to MIN at start of preburn

Bypass closed @ N/A — Secondary air setting: STOCK

Coal Bed Range: 1.94 - 2.43
Preburn Weight Up: 0.7
Preburn Start Weight: 3.7

Fan:

Fan Speed Setting: N/A

ON / OFF during warm-up
ON / OFF first _____ minutes of test

ON / OFF during preburn
ON / OFF balance of test run

Charcoal Bed Preperation:

Kindling: 2.42 — Paper: TORCH

All preburn/warm up fuel pieces were either: 11 or 15 inches long

Charcoal bed leveled @ 1 to 2 minutes before start of test. In stove 25 sec.

Test Start Weight 2.0 — Test Start Temp 402

Number Of Warm-ups: 2 Includes Preburn Load

Warm-up Load Weight, s: 11.98, 10.16

Test:

Door wide open during loading 45 (time) — After loading, door cracked ✓ inches for ✓ (time, from door opened)

Primary Air: Opened full for first 5 min., then set to run setting of MIN

Vac Test ☑

Category (W/P/T)	Time	Notes
W	1445	kindling lit, door cracked 1/2"
	1455	secondary load in, door 1/2"
	1515	door shut
	1545	pb load in
		t = 168 bed down
		t = 170 pb stopped
		t = 45 rear tube lit

Test date: 01/17/2019

hearthstone

Model: 8391

Date: 1/17/2019

Test Engineer: CFM

Run # F

Test Fuel Data

Test Fuel: Douglas Fir, Untreated, Air Dried, Standard Grade or Better, Dimensional Lumber, 19% to 25% Moisture Dry Basis

Piece #	Piece Size			Meter Moisture Content, Dry %			Avg. Corrected (%)
	Thick (in)	Width (in)	Length (in)	Top	Bottom	Side	
1	1.5	3.5	15	22.9	22.0	22.5	22.47
2	1.5	3.5	15	23.0	22.4	23.2	22.87
3	1.5	3.5	15	22.6	22.0	22.3	22.30
4	3.5	3.5	15	22.0	22.0	23.4	22.47
5							0.00
6							
7							
8							
9							
10							

Test Fuel Crib Weight (Wet Basis): 10.40 lbs. (Assembled test crib w/spacers and nails)

Average Moisture Content: 22.53

Coal Bed Range: 2.08 lbs. to 2.6 lbs

Test date: 01/18/2019

hearthstone

Model: 8392

Date: 1/18/2019

Test Engineer: CFM

Run # G

Test Fuel Data

Test Fuel: Douglas Fir, Untreated, Air Dried, Standard Grade or Better, Dimensional Lumber, 19% to 25% Moisture Dry Basis

Piece #	Piece Size			Meter Moisture Content, Dry %			Avg. Corrected (%)
	Thick (in)	Width (in)	Length (in)	Top	Bottom	Side	
1	1.5	3.5	15	20.1	19.6	19.8	19.83
2	1.5	3.5	15	20.8	21.0	21.1	20.97
3	1.5	3.5	15	22.0	21.6	22.0	21.87
4	3.5	3.5	15	20.3	21.4	20.9	20.87
5							0.00
6							
7							
8							
9							
10							

Test Fuel Crib Weight (Wet Basis): 9.72 lbs. (Assembled test crib w/spacers and nails)

Average Moisture Content: 20.88

Coal Bed Range: 1.944 lbs. to 2.43 lbs

Test date: 1/29/2019

Test Fuel Data

Model: 8392
Date: 1/29/2019
Test Engineer: CFM
Run # I

Test Fuel: Douglas Fir, Untreated, Air Dried, Standard Grade or Better, Dimensional Lumber, 19% to 25% Moisture Dry Basis

Piece #	Piece Size			Meter Moisture Content, Dry %			Avg. Corrected (%)
	Thick (in)	Width (in)	Length (in)	Top	Bottom	Side	
1	1.5	3.5	15	21.0	22.6	21.4	21.67
2	1.5	3.5	15	22.0	23.6	22.5	22.70
3	1.5	3.5	15	22.0	24.0	22.5	22.83
4	3.5	3.5	15	24.3	23.7	24.1	24.03
5							0.00
6							
7							
8							
9							
10							

Test Fuel Crib Weight (Wet Basis): 10.04 lbs. (Assembled test crib w/spacers and nails)

Average Moisture Content: 22.81

Coal Bed Range: 2.008 lbs. to 2.51 lbs

Test date:1/30/2019

Test Fuel Data

Model: 8392
Date: 1/30/2019
Test Engineer: CFM
Run # J

Test Fuel: Douglas Fir, Untreated, Air Dried, Standard Grade or Better, Dimensional Lumber, 19% to 25% Moisture Dry Basis

Piece #	Piece Size			Meter Moisture Content, Dry %			Avg. Corrected (%)
	Thick (in)	Width (in)	Length (in)	Top	Bottom	Side	
1	1.5	3.5	15	22.7	23.5	22.6	22.93
2	1.5	3.5	15	23.3	23.3	23.3	23.30
3	1.5	3.5	15	24.1	23.6	24.2	23.97
4	3.5	3.5	15	24.3	24.6	24.0	24.30
5							0.00
6							
7							
8							
9							
10							

Test Fuel Crib Weight (Wet Basis): 10.04 lbs. (Assembled test crib w/spacers and nails)

Average Moisture Content: 23.63

Coal Bed Range: 2.008 lbs. to 2.51 lbs

APPENDIX 5: Participants

Danick Power ing.
v-p operation
Services Polytests inc.
450.741.3636
www.polytests.com

Maxime Martin
Technicien
Services Polytests inc.
450.741.3636
www.polytests.com

Dave Bryant
Hearthstone

APPENDIX 6: Drawings and specifications

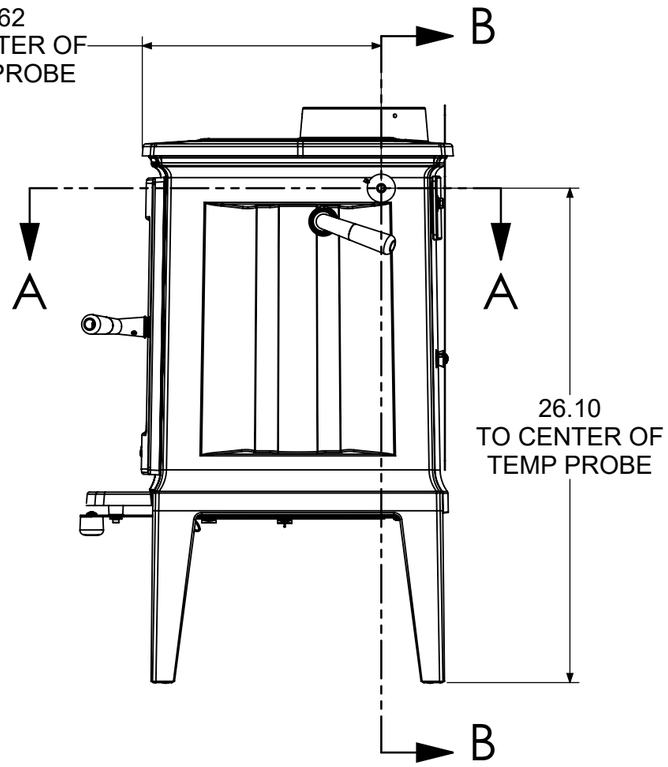

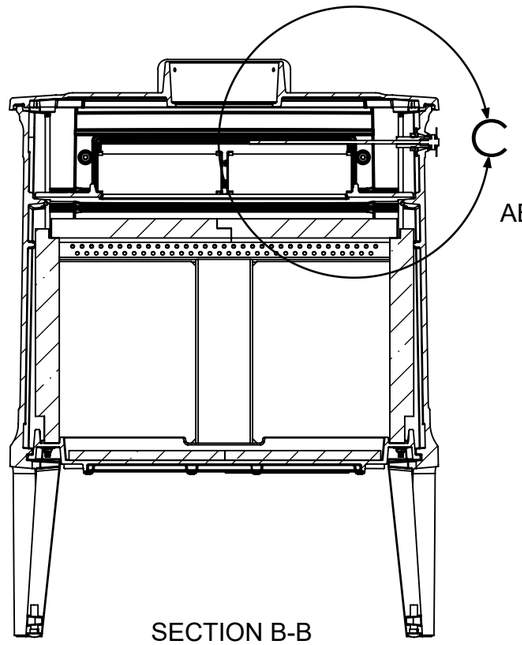

SECTION B-B
SCALE 1 : 8

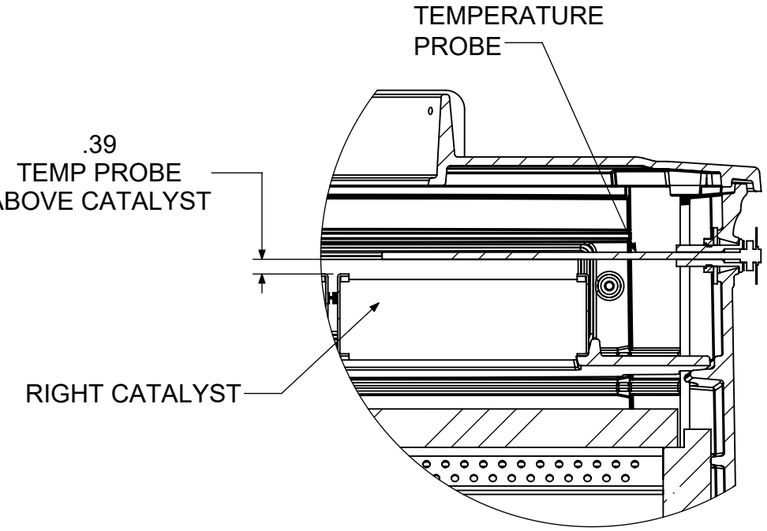

DETAIL C
SCALE 1 : 4

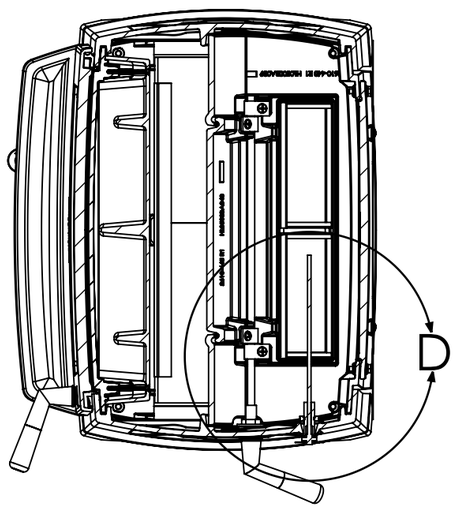

SECTION A-A
SCALE 1 : 8

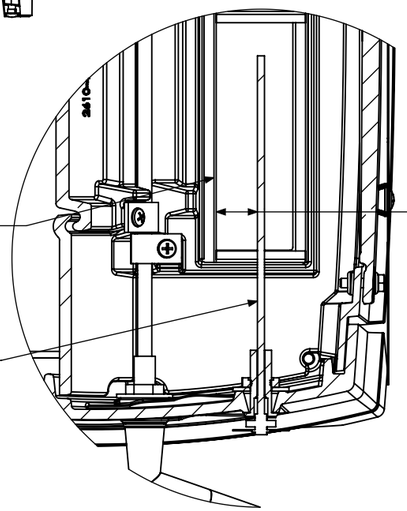

DETAIL D
SCALE 1 : 4

WEIGHT:

REVISIONS				
ECO	REV.	DESCRIPTION	DATE	APPROVED

VIEWS ARE THIRD ANGLE

This document submitted by HearthStone is the property of HearthStone and may contain information of a proprietary nature and shall not be copied or duplicated in whole or in part or used in whole or in part for any purpose other than that which is necessary for the preparation of bids or fabrication. Please return to HearthStone.

UNLESS OTHERWISE SPECIFIED:
TOLERANCES ARE:
FRACTIONS DECIMALS ANGLES
± 1/64 .XX± .015 ± 1/4°
.XXX± .005

1.) DIMENSIONS ARE IN INCHES / MM
2.) ALL MACHINED SURFACES TO BE DE-BURRED AND SMOOTHED

MATERIAL: NA

FINISH: NA

CAD GENERATED DRAWING,
DO NOT MANUALLY UPDATE

APPROVALS	DATE
DRAWN	2/24/2021
CHECKED	
RESP ENG	
MFG ENG	
QUAL ENG.	

hearthstone

GM40

TEMPERATURE PROBE DIMS

SIZE B | HEARTHSTONE DWG. NO. 8640 | REV. 0

SCALE: 1:12 | HERGOM DWG. NO. | SHEET1 OF 1

APPENDIX 7: Operator's manual

Green Mountain 40

(Model 8640)

Woodstove

OWNER'S MANUAL

Installation And Operating Instructions

We recommend that our products be installed and serviced by professionals who are certified in the U.S. by NFI (National Fireplace Institute).
www.nficertified.org

SAVE THIS OWNER'S MANUAL
FOR FUTURE REFERENCE

PLEASE READ THIS ENTIRE OWNER'S MANUAL BEFORE YOU INSTALL AND USE YOUR NEW GREEN MOUNTAIN 40 WOOD STOVE.

If this room heater is not properly installed, a house fire may result.
To reduce the risk of fire, follow the installation instructions.
Failure to follow these instructions can result in property damage, bodily injury, or even death.
Conforms to UL Std. 1482
Certified to ULC Std. S627

CONTACT LOCAL AUTHORITIES WITH JURISDICTION (BUILDING DEPARTMENT or FIRE OFFICIALS), ABOUT PERMITS REQUIRED, RESTRICTIONS AND INSTALLATION INSPECTION IN YOUR AREA.

California Prop 65

⚠ WARNING: This product can expose you to chemicals including glass wool fiber and carbon monoxide which are known to the State of California to cause cancer, birth defects or other reproductive harm. For more information go to www.P65Warnings.ca.gov

Notes on Stove Operation and Efficiency

Rating:

You have purchased a Hearthstone Green Mountain 40 tested to EPA Method 28R 40 CFR Part 60 where applicable. This stove is certified to comply with the U.S. Environmental Protection Agency 2020 particulate emissions standard using crib wood. It is certified at 1.07 gr/hr. emission rate and under specific test conditions has been shown to deliver heat at rates ranging from 13,900 to 31,600 Btu (output).

This wood heater has a manufacturer-set minimum allowable low burn rate that must not be altered. It is against federal regulations to alter this setting or otherwise operate this wood heater in a manner inconsistent with operating instructions in this manual.

Please refer to the Warranty section of this manual for registration instructions. In case of warranty claims, please contact the point of original sale or the nearest authorized Hearthstone dealer. Our dealer network processes all warranty claims. Authorized Hearthstone dealers can be located at www.hearthstonestoves.com.

This heater is designed to burn natural wood only. Higher efficiencies and lower emissions generally result when burning air-dried seasoned hardwoods, as compared to softwoods or to green or freshly cut hardwoods. **DO NOT BURN:** *Garbage, lawn clippings, material containing rubber (including tires), materials containing plastic, waste petroleum products paints or paint thinners, asphalt products, materials containing asbestos, construction or demolition debris, railroad ties, pressure treated wood, manure or animal remains, salt water driftwood or other previously salt water saturated materials, unseasoned wood, paper products, cardboard, plywood or particleboard.* This prohibition against burning these materials does not prohibit the use of fire starters made from paper, cardboard, sawdust, wax and similar substances for the purpose of starting a fire in an affected wood heater. Burning these materials may result in a release toxic fumes or render the heater ineffective and cause smoke.

Following the maintenance guidelines set forth in this manual will help insure the efficient use of your wood heater and minimize visible emissions. Having your stove inspected by a trained professional on a regular basis will greatly increase the potential for recognizing potential impacts to efficiency.

Proper draft is important to the efficient operation of your heater. Refer to the Normal Operation section of this manual for information regarding adequate draft. Both excessive and sub-minimum draft can affect the efficiency of your wood heater. Excessive draft can lead to over-consumption of fuel, lower overall heating capacity of the stove and potential over firing. Low draft can result in inefficient burns, low heat output, expulsion of smoke into the living area when stove doors are opened and an increased potential for build-up of flammable materials in the flue.

Efficiency:

Efficiency was measured and weighted using EPA Method 28R and CSA B415-10 methodology. A weighted average was used to calculate the overall efficiency across all of the 4 burn rate categories using the higher heating value (HHV). The weighted average efficiency is 79% (HHV).

To maximize the efficiency of your wood stove make sure it is sized properly for the space you plan to heat. An oversized stove will often be forced to burn at a lower and dirtier burn rate. Consult with your dealer for sizing and correctly placing the stove in your home. An incorrectly placed stove can greatly reduce efficiency. Maximizing the efficiency of your stove will heat your house quickly, burn cleaner and use less wood.

Refer to the Choosing Firewood section of this manual for appropriate fuel selection. Seasoned firewood is typically at or near 20% moisture content. This can be measured with any number of hand-held moisture meters available through your local hearth shop. Follow instructions included in the meter you purchase to measure fuel wood moisture content. Burn only dry, seasoned wood as using wet wood will greatly reduce your efficiency.

CO Emissions:

The Green Mountain 40 has the following CO emission rates by burn level: Category 1 (low) –40.7 g/hr., Category 2 (med. low) – 16.3 g/hr., Category 3 (med. high) – 8.6 g/hr. and Category 4 – 60.0 g/hr. Wet wood or unapproved fuel described above can greatly affect the emissions of a wood burning stove.

Smoke/Fire/CO Detectors:

It is highly recommended that smoke and CO detectors be installed throughout the heated space when a wood burning heater is installed. Be certain to install these devices not only in the area where the wood appliance is located, but also in bedrooms, hallways leading to other areas of the house and all common areas of the heated space. Check the batteries in these devices and assure operation by performing whatever test operations are recommended by the manufacturer.

TABLE OF CONTENTS

INTRODUCTION 4

CODES 5
SAFETY INFORMATION 5
PERIODIC CHECKLIST 6
EMERGENCY PROCEDURES 6

SPECIFICATIONS 7

INSTALLATION 8

UNPACKING 8
PACK LIST 8
INSTALLING YOUR STOVE 8
HEARTH REQUIREMENTS & FLOOR PROTECTION 9
COMBUSTIBLE SURFACE REQUIRED CLEARANCES 10
CHIMNEY CONNECTOR SYSTEMS AND CLEARANCES FROM COMBUSTIBLE WALLS 12
OUTSIDE AIR SUPPLY 14
VENTING COMPONENTS & CONFIGURATION REQUIREMENTS 15
INSTALLING IN A MOBILE HOME 20

OPERATION 19

CONTROLS AND FEATURES 22
BUILDING A FIRE 24
BREAKING IN YOUR WOOD STOVE 24
NORMAL OPERATION 25
CATALYTIC COMBUSTOR OPERATION 26

MAINTENANCE 28

CATALYTIC COMBUSTOR INSPECTION AND REPLACEMENT PROCEDURES 28
INSPECTING THE CATALYSTS 28
REPLACING THE CATALYSTS 29
REPLACING THE BAFFLE 26
REPLACING THE REFRACTORY STONE AND SECONDARY RISER ASSEMBLY 26
GLASS REPLACEMENT PROCEDURES 26
CREOSOTE FORMATION & REMOVAL 29
GASKETS 29
GLASS 29

TROUBLESHOOTING 30

TROUBLESHOOTING GUIDE 31
REPLACEMENT PARTS & OPTIONAL ACCESSORIES 33

SAFETY LABEL 34

WARRANTY 35

INTRODUCTION

Thank you for purchasing a Green Mountain 40 woodstove from Hearthstone Quality Home Heating Products. This stove will provide years of comfortable heat. This stove combines the warmth and comfort of soapstone and cast iron with the efficiency of advanced catalytic technology. The Green Mountain 40 blends modern technology with the unique beauty and qualities of cast iron. We trust that you will appreciate the quality of this handcrafted product.

Your Green Mountain 40 woodstove burns very efficiently, and produces a large amount of heat. However, you should not consider your Green Mountain 40 the primary heat source for your home. The Green Mountain 40's large glass window allows you to enjoy the fire from a variety of locations in the room.

Please read this manual in its entirety. Its purpose is to familiarize you with your stove's safe installation, proper break-in, operation and maintenance. It contains extremely important information so keep it handy and refer to it often.

A qualified heating technician may need this owner's manual as a reference when installing this stove in your home. There are national, state, and local building codes that direct the technician on how to install your stove. These codes stipulate the dimension of stovepipe and clearances to walls, ceilings, hearth, and other combustible surfaces. The codes exist to reduce the risk of fire. Failure to follow these instructions can result in fire, property damage, bodily injury, and even death.

Install the stove in a safe, open area, away from traffic flow, doors, and hallways. If possible, try to install the stove near an existing chimney and chimney connector. It is extremely important to install this stove with the proper clearance from combustible surfaces. You can purchase specific connector pipe and special wall coverings as specified by this manual and the NFPA 211 code to protect combustible surfaces. As a general rule, keep furniture, drapes, curtains, wood, paper, and other combustibles at least 36 inches (92 cm) away from the stove. Never install the stove in or near a storage location for gasoline, kerosene, charcoal lighter fluid or any other flammable liquids.

Install the stove in your central living area to allow heat to radiate naturally to distant rooms. Do not install your stove in a poorly insulated area. This is inefficient and would likely result in higher fuel usage.

- **SAFETY NOTICE:**

  AN IMPROPERLY INSTALLED STOVE CAN RESULT IN A HOUSE FIRE. FOR YOUR SAFETY, CAREFULLY FOLLOW THE INSTALLATION DIRECTIONS. CONTACT LOCAL BUILDING OR FIRE OFFICIALS ABOUT RESTRICTIONS AND INSTALLATION INSPECTION IN YOUR AREA.

The safety of your stove will depend on many factors, some of which include: distance to combustible objects, correct venting, and adequate chimney maintenance. Should you have any questions, do not hesitate to contact your dealer for additional information.

Contact your dealer for any necessary warranty service.

This Green Mountain 40 Model 8640 stove is warranted by:

Hearthstone ***Quality Home Heating Products, Inc***®
317 Stafford Ave.
Morrisville, Vermont 05661, USA
www.Hearthstonestoves.com

CODES

When you install your Green Mountain 40 woodstove, it is imperative that you adhere to all Federal and local codes. Obtain these codes from either of the following sources:

American National Standards Institute, Inc. (ANSI)
1430 Broadway
New York, NY 10018
www.ansi.org

National Fire Protection Association, Inc. (NFPA)
Battery March Park
Quincy, MA 02269
www.nfpa.org

If you are installing your Green Mountain 40 in a mobile or manufactured home, follow the guidelines described in the Manufactured Home Construction and Safety Standard, Title 24 CFR, Part 3280 (United States).

SAFETY INFORMATION

Read and understand this Owner's Manual thoroughly before installing and using this stove.

Make sure to install your stove:

- According to the manufacturer's recommendations
- In accordance with all applicable codes
- With the proper sized chimney

When using your stove, follow these safety precautions:

- **Never** modify this stove in any way.
- **Never** burn kiln dried, painted or treated wood in this stove.
- **DO NOT BURN GARBAGE. Never** burn garbage or trash, colored or glossy paper, solvents, plywood, artificial logs, cardboard, or driftwood, in this stove.
- **Never** burn coal in this stove.
- **DO NOT BURN FLAMMABLE FLUIDS.**
- **DO NOT USE CHEMICALS OR FLUIDS TO START THE FIRE. Never** use gasoline, kerosene, charcoal lighter fluid, or other flammable fluids to start or invigorate the fire. These fuels will cause dangerous burning conditions in the stove. Keep all such materials away from the stove.
- **Never** use a wood grate or other device to elevate the fire.
- **Never** allow logs in the firebox to hit the glass when the door is closed.
- **Never** slam the door or use the door to force wood in to the stove.
- **Never** over-fire your stove. (See page 27)
- **Never** put articles of clothing or candles on a hot stove.
- **Never** connect the stove to a flue used by another appliance.

Other safety guidelines:

- Keep all combustible items such as furniture, drapes, clothing, and other items, at least 36" (0.92 m) from the stove (See page 9)
- Install a smoke detector, preferably in an area away from your wood stove.
- Keep a fire extinguisher handy. We recommend the type rated "A B C."
- Dispose of ashes properly. (See page 23)
- Keep children and pets away from the stove when it is burning; they could be seriously injured by touching a hot stove.
- Clean your chimney system as needed. (See page 32)
- Outside combustion air may be required if:
  1. This solid-fuel-fired appliance does not draw steadily, smoke rollout occurs, fuel burns poorly, or back-drafts occur whether or not there is combustion present.
  2. Existing fuel-fired equipment in the house, such as fireplaces or other heating appliances, smell, do not operate properly, suffer smoke roll-out when opened, or back-draft whether or not there is combustion present.
  3. Opening a window slightly on a calm (windless) day alleviates any of the above symptoms.
  4. The house is equipped with a well-sealed vapor barrier and tight fitting windows and/or has any powered devices that exhaust house air.
  5. There is excessive condensation on windows in the winter.
  6. A ventilation system is installed in the house.

If these or other indications suggest that infiltration air is inadequate, additional combustion air should be provided from the outdoors. Outside combustion air can be provided to the appliance by using the optional outside air kit #96-53400

PERIODIC CHECKLIST

Perform each of these tasks at the specified intervals.

At the End of Every Week:

- Empty ashes from the firebox, sooner if the firebox is full.

At the Beginning of Every Other Month:

- Depending upon your use of the stove, visually inspect the chimney connector and chimney for creosote. (see page 32)
- Check door seals using the "dollar bill test." - When the stove is cool, shut the door on a dollar bill. If the bill pulls out without any resistance, then your stove's door is not sealing properly. To tighten the seal, adjust the door latch mechanism or change the door gasket. (Refer to page 32.)
- Inspect the face of the catalytic combustor for fly ash and soot. Use a soft-bristled brush to remove if present. It is recommended to visually inspect the catalytic combustor at least 3 times during the heating season, or every 2-3 months.

At the End of Every Season:

- Dismantle the chimney connector and clean it thoroughly. Replace any pieces that show signs of rust or deterioration.
- Inspect and, if necessary, clean your chimney.
- Clean out the inside of the stove thoroughly.
- Check and clean the catalytic combustor, if necessary
- Inspect all door gasket material and replace if worn, frayed, cracked or extremely hard.

EMERGENCY PROCEDURES

If you have a stovepipe or chimney fire, follow these instructions:

1. If the fire is too threatening, leave the area and call the fire department immediately! If not, perform the next three steps.
2. Close the primary air control.
3. Close the stovepipe damper (if present).
4. Close the bypass damper
5. Keep the stove front door closed!

- **WARNING: DO NOT ATTEMPT TO PUT OUT A STOVEPIPE OR CHIMNEY FIRE BY THROWING WATER ONTO THE STOVE, STOVEPIPE, OR CHIMNEY. THE EXTREMELY HIGH TEMPERATURE OF SUCH FIRES CAN CAUSE INSTANTANEOUS STEAM AND SERIOUS BODILY HARM.**

Once the chimney fire expires, leave the primary air control and bypass handle closed and let the fire in the stove die out completely. Inspect the stove, stovepipe, and chimney thoroughly for any sign of damage before firing the stove again. You must correct any damage before using your stove again.

Establish a routine for the fuel, wood burner and firing technique. Check daily for creosote build-up until experience shows how often you need to clean to be safe. Be aware that the hotter the fire the less creosote is deposited, and weekly cleaning may be necessary in mild weather even though monthly cleaning may be enough in the coldest months. Contact your local municipal or provincial fire authority for information on how to handle a chimney fire. Have a clearly understood plan to handle a chimney fire.

SPECIFICATIONS

Maximum Heat Output:
40,000 BTUs per hour of cordwood (based on independent laboratory test results).

Floor Size of Heated Area:
Up to a maximum of 1,400 square feet. Factors unique to your home can reduce the square footage the stove will heat. Home insulation value, number and efficiency of windows, floor plan, stove placement, quality of the fuel and other conditions may limit the heating ability of the stove.

Firebox Capacity:
1.32 cubic feet.

Maximum Log Length: Up To 16" (40.6cm).

Emissions: 1.07 g/hr.

Burn Time: Up to 16+ hrs. (*Heat Life*™: Up to 20 hours) Note: The amount and weight of wood contained per cubic foot of firebox volume can vary from 10 to 25 lbs. per cubic foot depending on type of wood, moisture content, packing density and other factors.

Stove Dimensions:

Height:	30 3/8" (77.2cm)
Width:	23 1/4" (59.1cm)
Depth:	19 3/8" (49.2cm)
Weight:	464 lbs. (210 kg)

Connector Size:	6" (152 mm) diameter
Metal Chimney:	6" (152 mm) inside diameter
Masonry Chimney:	6" (152 mm) inside diameter (round flue), 8" x 8" (203 x 203 mm) (square flue)

Crate Dimensions: H-40" W-29" L-36" or 102x74x 92cm

Optional Equipment:

Outside Air Kit	96-53400
Blower Kit	96-57400

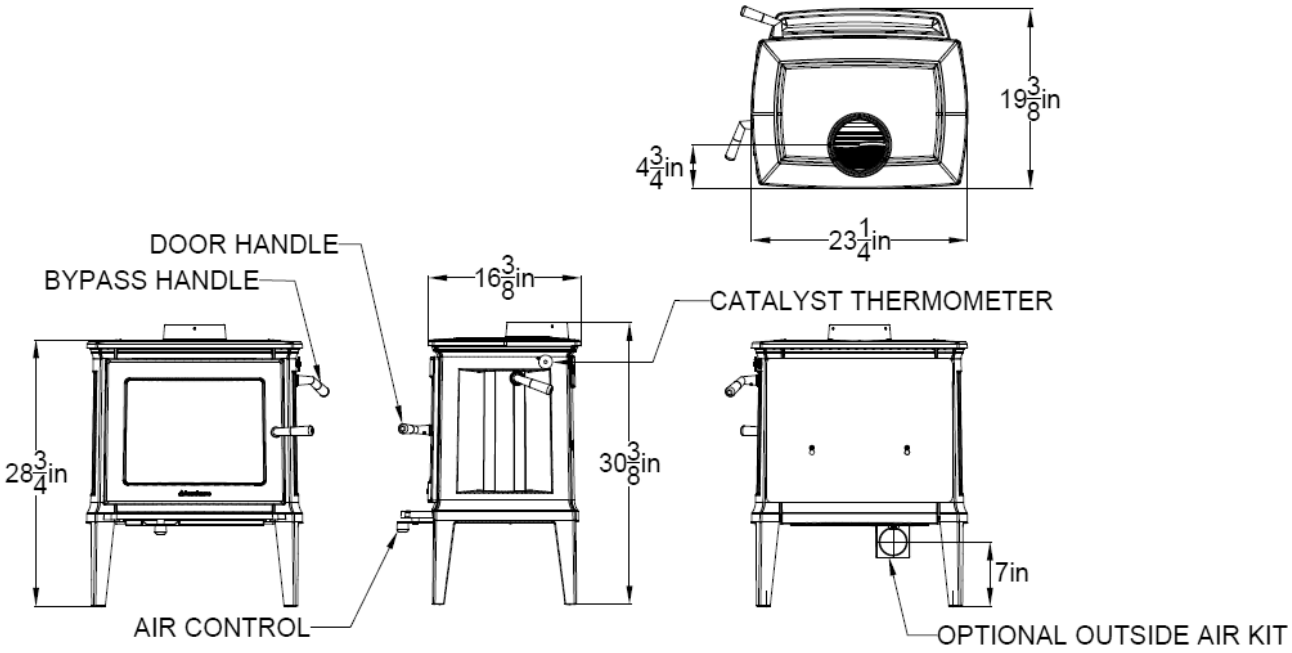

Figure 1 – Green Mountain 40 Dimensions

INSTALLATION

UNPACKING

Hearthstone packages your Green Mountain 40 woodstove with the greatest care so that it ships safely. Under certain circumstances, however, damage may occur during transit and handling. When you receive the Green Mountain 40, carefully unpack and inspect the stove and all accompanying parts. Ensure that all parts are included inside the stove. If any parts are damaged or missing, please contact your authorized Hearthstone dealer immediately.

Be sure to remove the packaging material in the flue collar and above the baffle before installing the chimney.

PACK LIST

Green Mountain 40 Model 8640 Woodstove
Owner's Manual

The label is attached by a cable to the bottom of the stove. Take care when lifting the stove not to damage the label or cable. After final positioning of the stove, the label may be stored in the holding clip on the bottom shield of the stove.

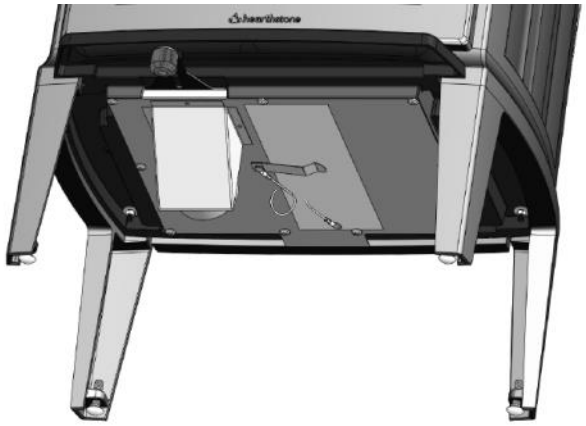

Figure 2 - Label Location

INSTALLING YOUR STOVE

Choose a place to install your Green Mountain 40 woodstove. Consider the location of your stove for optimum heating efficiency. In general, it is better to place your stove in a main living area, rather than in a basement or other confined space.

Inspect this location to make sure that the stove and stovepipes will have the required clearance from combustible materials that are near the stove. Combustibles include walls, floor, ceiling, and chimney chase. You must carefully consider the clearances to all of these combustibles before actually connecting your stove.

If the floor is made of combustible material, then a non-combustible floor protector is required between the floor and the stove. An example of a non-combustible floor protector is a hearth constructed with a continuous layer of tile, brick, slate, glass or another non-combustible facing. There is no R-value requirement.

If you use a rear connector pipe, ensure it is listed with Underwriter's Laboratories. Check the listing of your pipe with UL for the correct clearances.

The diagrams in this manual represent typical installations, but are specific to the Simpson Dura-Vent DVL brand.

Clearances to NFPA Code 211 Protected Surfaces

You can reduce the clearances to combustible surfaces by using any National Fire Protection Agency (NFPA) approved wall protection system with additional approval of the regulatory authority having jurisdiction in your area. Please refer to NFPA Code 211 for specifications and complete details. You can obtain this information directly from the NFPA.

National Fire Protection Agency
Batterymarch Park
Quincy, MA 02269
1-800-344-3555
1-617-770-3000
www.nfpa.org

HEARTH REQUIREMENTS & FLOOR PROTECTION

Ensure you protect combustible flooring with a covering of noncombustible material. The Green Mountain 40 does not require an insulated hearth pad. The minimum floor protection must be met under the stove and extend beyond the stove as follows:

The minimum floor protection for US installations is 33in x 31-1/2in.
The minimum floor protection for installations in Canada is 43in x 40in.

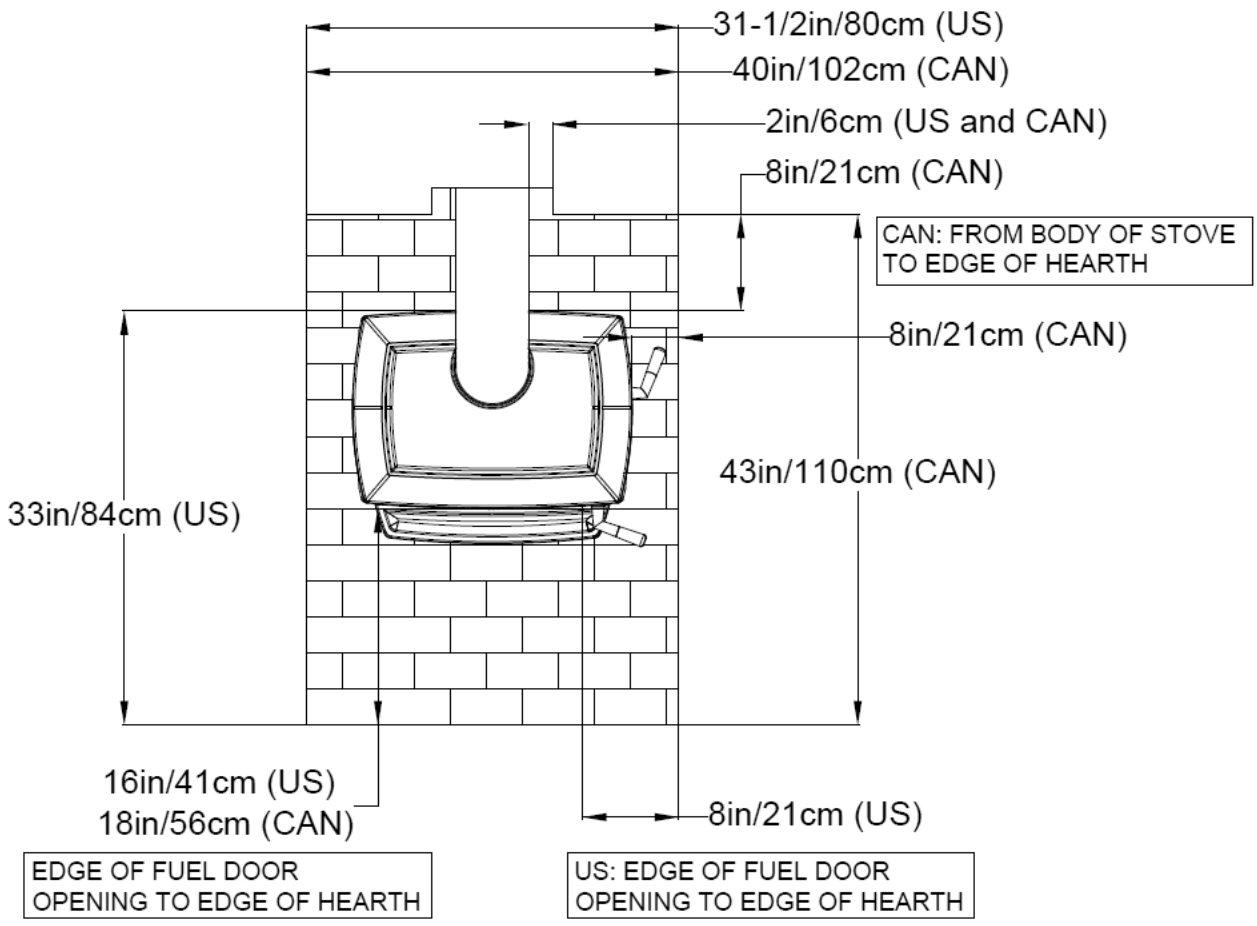

Figure 3 – Hearth Dimensions

COMBUSTIBLE SURFACE REQUIRED CLEARANCES

Note: *Dimensions shown in the following figures are from the body of the stove unless otherwise indicated.*

It is very important to follow minimum clearances for chimney connectors to combustibles such as walls and ceilings when installing the stove near combustible surfaces.

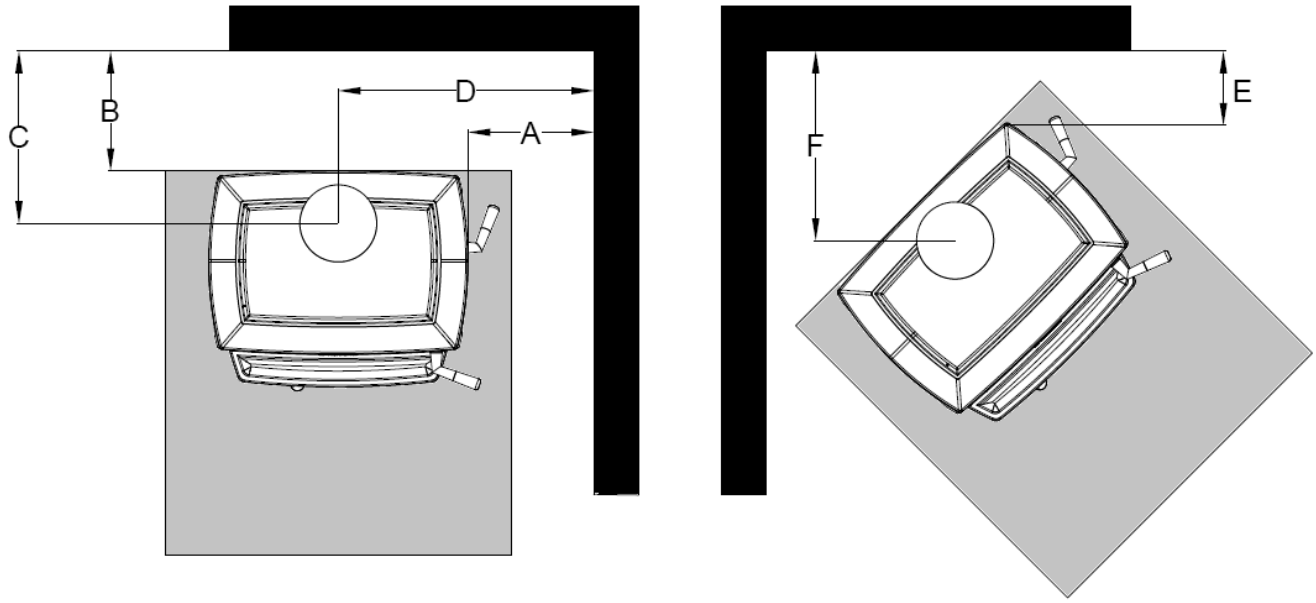

Figure 4 – Clearance to Combustibles

	Parallel				Corner	Corner
Clearances	A	B	C	D	E	F
Single wall Connector – Inc. Rear Heat Shield	13”-33cm	9”-23cm	14”-36cm	24.5”-63cm	6”-16cm	16.5”-42cm
Single Wall Connector – With Blower Kit Shield	13”-33cm	9”-23cm	14”-36cm	24.5”-63cm	6”-16cm	16.5”-42cm
Double Wall Connector – Inc. Rear Heat Shield	13”-33cm	7”-18cm	12”-32cm	24.5”-64cm	6”-16cm	16.5”-42cm
Double Wall Connector – With Blower Kit Shield	13”-33cm	7”-18cm	12”-32cm	24.5”-64cm	6”-16cm	16.5”-42cm
Alcove W/Single Wall Conn – Inc. Rear Heat Shield	13”-33cm	9”-23cm	14”-36cm	24.5”-63cm	6”-16cm	16.5”-42cm
Alcove W/Single Wall Conn – With Blower Kit Shield	13”-33cm	9”-23cm	14”-36cm	24.5”-63cm	6”-16cm	16.5”-42cm
Alcove W/Dbl Wall Conn – Inc. Rear Heat Shield	13”-33cm	9”-23cm	14”-35cm	24.5”-61cm	6”-16cm	16.5”-42cm
Alcove W/Dbl Wall Conn – With Blower Kit Shield	13”-33cm	9”-23cm	14”-35cm	24.5”-61cm	6”-16cm	16.5”-42cm

Alcove Clearances (inches)	Unprotected Surfaces	Protected Surfaces (NFPA-211)
Minimum alcove width	50” – 157.5cm	See NFPA-211
Min. Alcove ceiling from floor with single wall connector	56” – 142.3cm	See NFPA-211
Min. Alcove ceiling from floor with double wall connector	56” – 142.3cm	See NFPA-211

FOR BLOWER KIT, USE KIT #96-57400

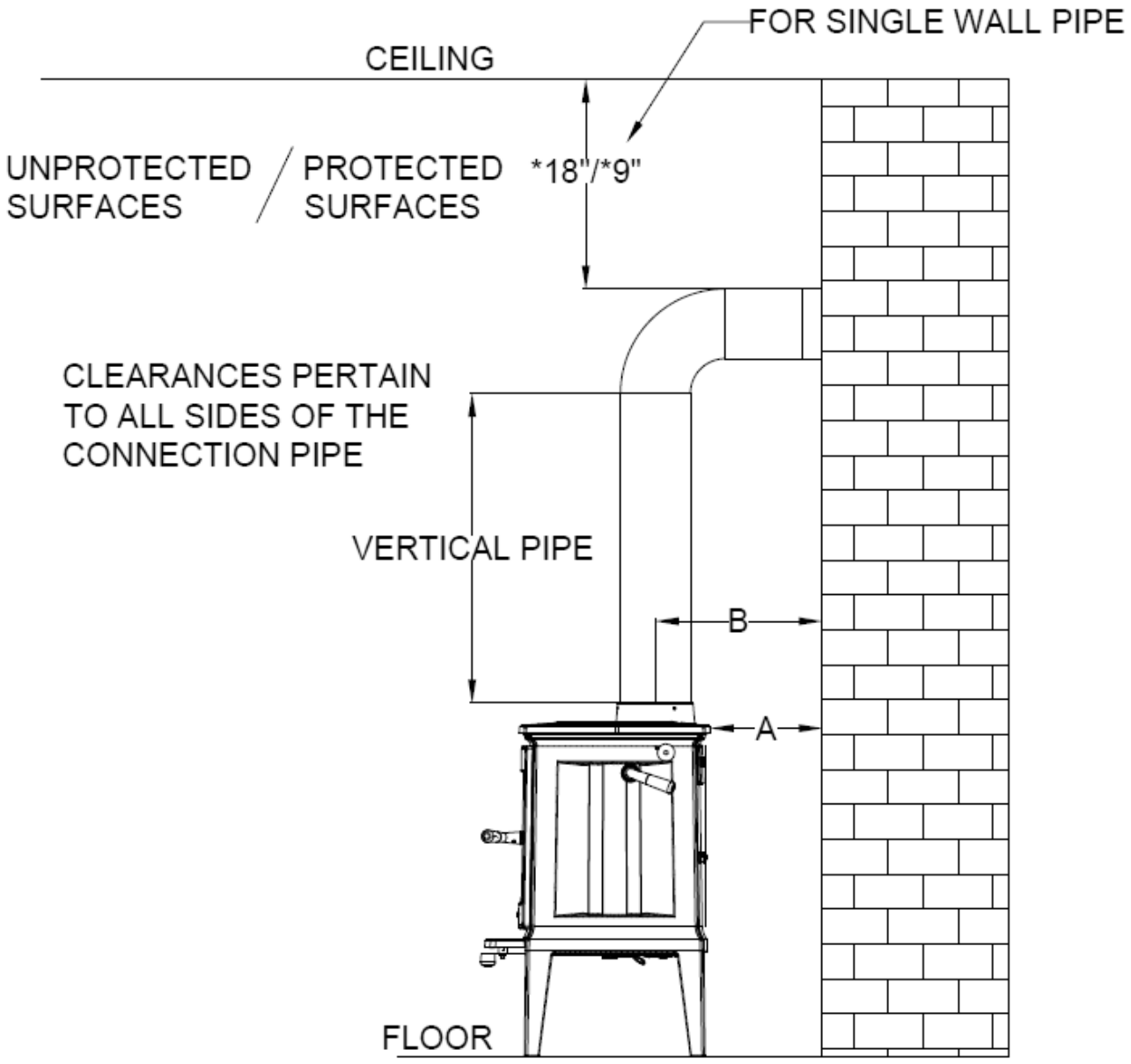

Figure 5 Chimney Connector Clearances

	Single Wall Pipe		Double Wall Pipe	
Through the wall top flue exit	**With Blower Kit Shield****	**Inc. Rear Heat Shield**	**With Blower Kit Shield****	**Inc. Rear Heat Shield**
A	9" (23cm)	9" (23cm)	7" (18 cm)	7" (18 cm)
B	14" (36 cm)	14" (36 cm)	12" (32cm)	12" (32cm)

***For double wall pipe clearance to ceiling, refer to pipe manufacturer specifications.**

See Parallel Clearance to Combustibles for clearances to the sides of the stove.

**** FOR BLOWER KIT, USE KIT #96-57400**

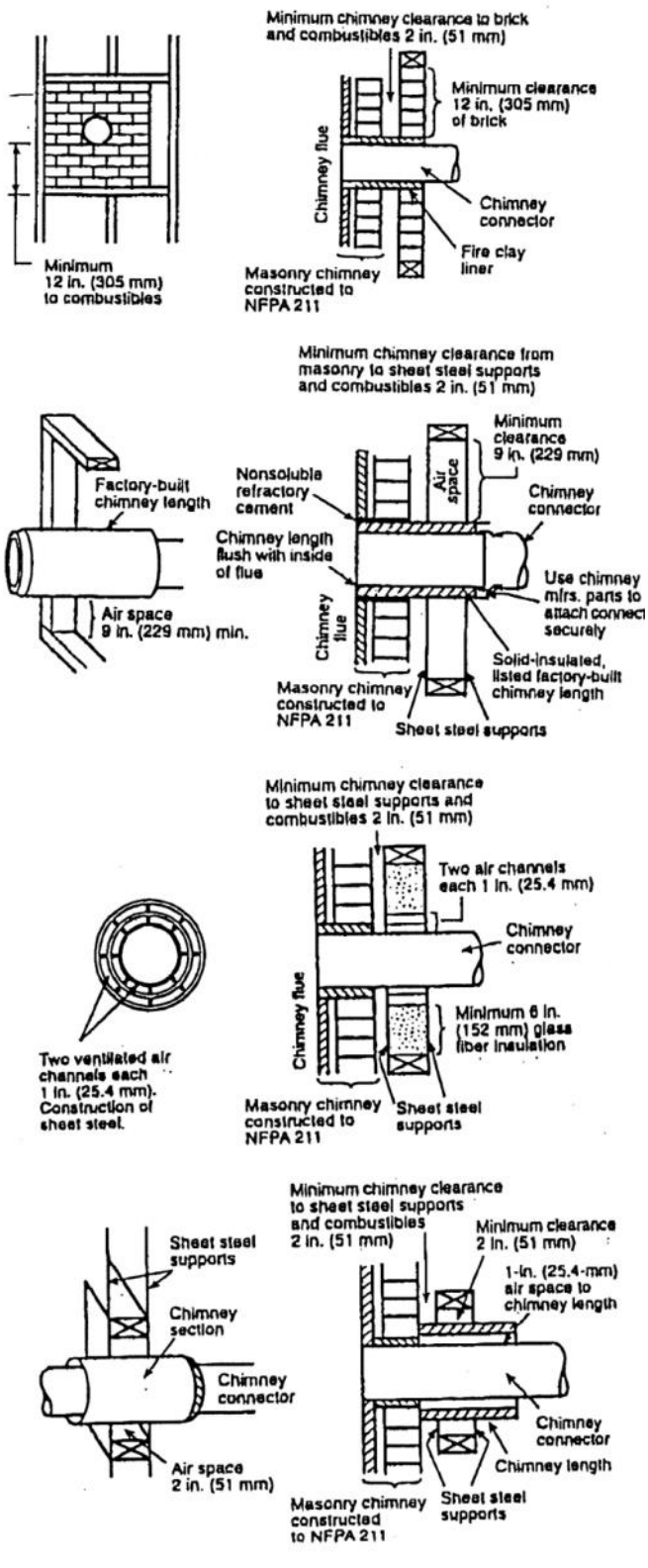

CHIMNEY CONNECTOR SYSTEMS AND CLEARANCES FROM COMBUSTIBLE WALLS FOR RESIDENTIAL HEATING APPLIANCES

A. Minimum 3.5in thick brick masonry all framed into combustible wall with a minimum of 12in. brick separation from clay liner to combustibles. The fire clay liner shall run from outer surface of brick wall to, but not beyond, the inner surface of chimney flue liner and shall be firmly cemented in place.

B. Solid-insulated, listed factory-built chimney length of the same inside diameter as the chimney connector and having 1in. or more of insulation with a minimum 9in. air space between the outer wall of the chimney length and combustibles.

C. Sheet steel chimney connector, minimum 24 gauge in thickness, with a ventilated thimble, minimum 24 gauge in thickness, having two 1in. air channels, separated from combustibles by a minimum of 6in of glass fiber insulation. Opening shall be covered, and thimble supported with a sheet steel support, minimum 24 gauge in thickness.

D. Solid insulated, listed factory-built chimney length with an inside diameter 2in. larger than the chimney connector and having 1in. or more of insulation, serving as a pass-through for a single wall sheet steel chimney connector of minimum 24 gauge thickness, with a minimum 2in. air space between the outer wall of chimney section and combustibles. Minimum length of chimney section shall be 12in. chimney section spaced 1in. away from connector using sheet steel support plates on both ends of chimney section. Opening shall be covered, and chimney section supported on both sides with sheet steel supports securely fastened to wall surfaces of minimum 24-gauge thickness. Fasteners used to secure chimney section shall not penetrate chimney flue liner.

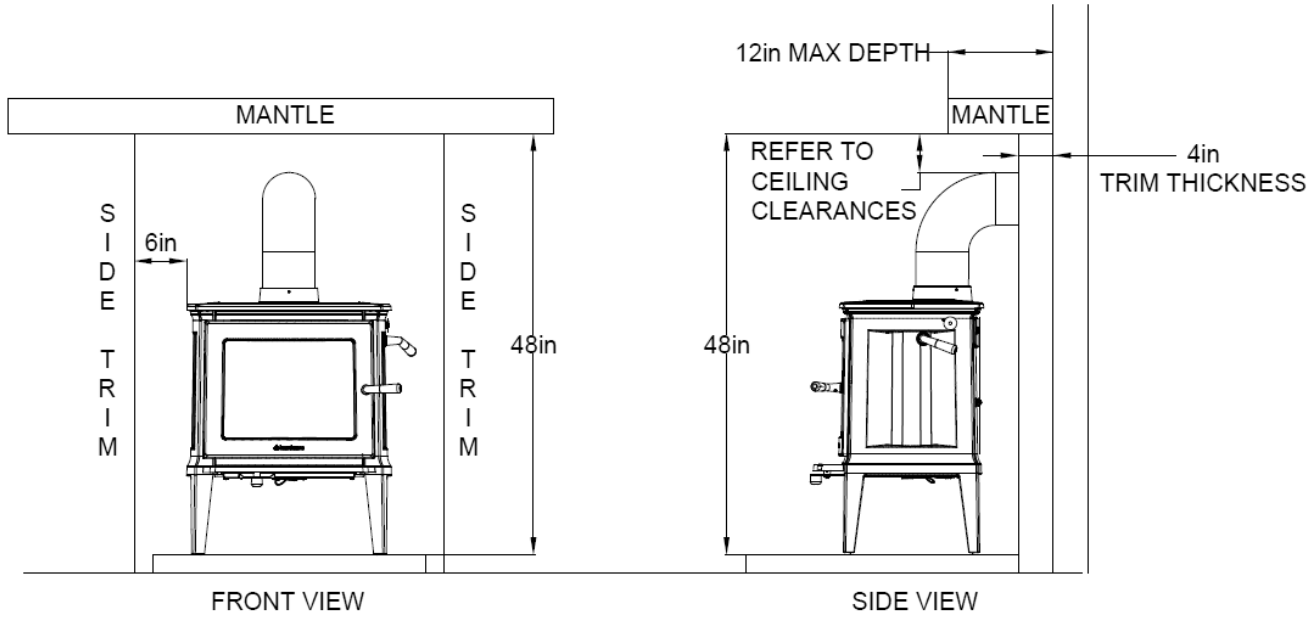

Figure 6 Trim and Mantle Clearances

OUTSIDE AIR SUPPLY

(Optional Kit #96-53400)

You can connect an outside air source directly to this stove using an optional outside air kit. The advantage of providing outside air directly to the stove is that the air used by the stove for combustion is taken from outside the residence rather than from within the room where the stove is located.

The outside air kit for this stove allows for the direct connection of the stove's air intake to a minimum 3" (76 mm) diameter duct (supplied by others)* which leads to the outside of the house. When considering placement of the duct from the outside of the house to the hearth, keep in mind the need to avoid structural members of the house. The outside air kit attaches to the underside of the stove. Refer to the instructions provided with the kit for installation.

*An adaptor for 4" duct is available if needed. KIT #90-53308

When using an outside air kit in Canada, the stove must be attached to your home's floor. Use the shipping clips that came with the stove and fasteners long enough to attach securely to the subfloor. (The clips and fastener heads may be painted to minimize visibility).

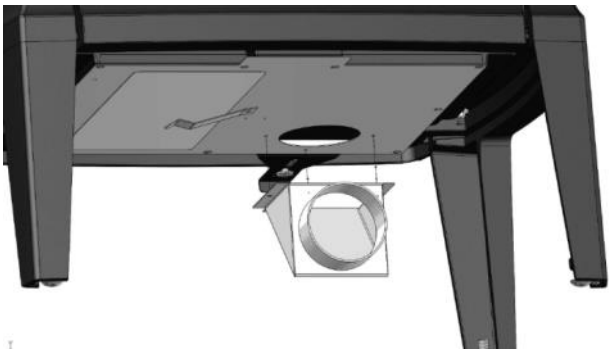

Figure 7 – Outside Air Kit Detail

The International Residential Code (IRC) does not allow the outside air duct to terminate higher than the appliance. Some building officials restrict vertical rise in the duct's termination. Hearthstone recommends the termination be at the same level, or lower than the air intake on the stove. When using an outside air kit in Canada, a damper allowing 100% closure shall be provided.

Locate the termination of the duct on the outside wall of the home in such a manner to avoid the possibility of obstruction by snow, leaves or other material. Screen the termination using ¼" x ¼" mesh rodent screen and cover it with a rain/wind proof hood (flex pipe, outside termination, mesh, and hood supplied by others) Contact your dealer for availability.

VENTING COMPONENTS & CONFIGURATION REQUIREMENTS

- **DO NOT CONNECT THIS UNIT TO A CHIMNEY FLUE USED BY ANOTHER APPLIANCE**

- Single wall connector that is at least 24 MSG or 25 MSG blued steel stovepipe.

- Double wall connector (Rear pipe) which is used with a listed, factory-built “Type HT" chimney or with a masonry chimney to reduce clearances, is available from several manufacturers, your dealer can help you choose. Some air insulated connector pipe models available are Simpson Dura Vent DVL and Metalbestos DS. Security, GSW and Ameritec also have acceptable Rear connector pipe.

- When used in a mobile home, a spark arrester is required. (See page 18)

- The chimney connector cannot pass through a floor or ceiling, nor any attic or roof space, closet or similar concealed space. Where venting requires passage through a wall or partition of combustible construction, the installation must conform to NFPA Code 211 or CAN/CSA - B365.

- Be sure to follow the manufacturer’s instructions to maintain an effective vapor barrier at the location where the chimney of other component penetrates the exterior of the structure

- It is very important to follow minimum clearances for chimney connectors to combustibles such as walls and ceilings when installing the stove. Typical chimney connector clearances are outlined below. The single wall clearances are generic; the double wall clearances shown are specifically for Simpson DuraVent DVL and may vary with other brands. ***Check the specifications from the manufacturer of your connector.***

COMPONENTS OF A VENTING SYSTEM

The complete venting system consists of several components: chimney connector, wall thimble, wall pass-through, chimney, and liner. It is *absolutely necessary* that you install all of these components and maintain the clearances to combustibles discussed earlier to ensure a safe stove installation.

To protect against the possibility of a house fire, you *must properly install and constantly maintain the venting system in good condition. Be sure to inspect the chimney and chimney connector and keep it clean.* Upon inspection, immediately replace rusted, cracked, or broken components. Failure to follow these instructions and specified components or using make-shift compromises can result in fire, property damage, bodily injury, and even death.

- The *chimney connector* is the stovepipe from the woodstove to the chimney. The chimney connector stovepipe is 6" (152 mm) diameter, 24 MSG or 25 MSG blued steel connector pipe. *Do not use aluminum or galvanized steel pipe* - they cannot withstand the extreme temperatures of a wood fire.
- The *thimble* is a manufactured (or site-constructed) device installed in combustible walls through which the chimney connector passes to the chimney. It keeps the walls from igniting. You must use a wall thimble when installing a chimney connector through a combustible wall to the chimney.

- A *wall pass-through* (or chimney support package) also keeps the walls from igniting. You must use one when connecting through a wall or ceiling to a prefabricated chimney.

- Only install this stove to a *lined masonry chimney* or an *approved high temperature prefabricated residential* type building heating appliance chimney. *Do not* connect this stove to a chimney serving another appliance; you will compromise the safe operation of both the wood stove and the connected appliance.

- A *liner* is the UL 1777 or ULC S635 (for factory built fireplace or masonry) chimney.

You must connect your stove to a chimney comparable to those recommended in this manual. *Do not use stovepipe as a chimney*. Use stovepipe for freestanding installations only to connect the stove to a proper chimney.

- **WARNING: DO NOT CONNECT THIS APPLIANCE TO ANY AIR DISTRIBUTION DUCT OR SYSTEM.**

INSTALLING A VENTING SYSTEM

Attach stovepipe sections to the flue collar and to each other with the crimped end toward the stove. If creosote builds up, this allows the creosote to run into the stove and not on the outside of the stovepipe or onto the stove.

Secure all joints, including attaching the stovepipe to the stove's flue collar, with three sheet metal screws. Install #10 x 1/2" (3 mm x 13 mm) sheet metal screws into the holes pre-drilled in the flue collar. Disregarding the screws can cause joints to separate from the vibrations that result from a creosote chimney fire.

You can simplify connecting stovepipe by using additional accessories such as telescoping pipes, slip-connectors or clean-out tees. These accessories ease the periodic inspection of your chimney, as well as allow you to dismantle the stovepipe easily (without moving the stove).

Install the stove as close as practical to the chimney, while maintaining all proper clearances. Install stovepipe that is as short and as straight as possible. Horizontal runs of stovepipe must always rise away from the stove at a minimum of 1/4" per foot (21mm/m).

We do not recommend long runs of stovepipe to increase heat dispersal. Longer lengths of stovepipe, or more connecting elbows, than necessary increase the chances of draft resistance and the accumulation of creosote buildup.

In general, you do not need to install a stovepipe damper with the Green Mountain 40. Some installations, however, could benefit from a stovepipe damper, such as a tall chimney which can create a higher than normal draft. In such cases, a damper can help regulate the draft. The Green Mountain 40 requires a draft between 0.06" and 0.1" WC. For drafts above 0.1" WC, install a stovepipe damper. Check the draft at stove installation time.

Remember, the NFPA recommends minimum clearances for chimney connectors to combustibles such as walls and ceilings. Once the stove is installed at safe distances from these combustible surfaces, it is also important to maintain these connector clearances for the remainder of the installation.

CONNECTING THE STOVE TO A CHIMNEY

You can install your Green Mountain 40 to a prefabricated metal chimney, or to a masonry chimney.

This room heater must be connected to (1) a listed Type HT (2100° F) chimney per UL 103 or ULC S629, or (2) a code-approved masonry chimney with a flue liner. The chimney size should not be less than the flue collar, or more than three times greater than the cross-sectional area of the flue collar.

We recommend installing a cleanout tee where possible to simplify chimney cleaning and maintenance.

Connecting to a Prefabricated Metal Chimney

There are two ways to install a prefabricated metal chimney:

- An *interior* installation where the chimney passes inside the residence through the ceiling and roof.
- An *exterior* installation where the chimney passes through the wall behind the stove then up the outside of the residence.

Whenever possible, choose an interior chimney. An interior chimney heats up quickly and retains its heat; thus promotes a better draft and discourages the formation of creosote. An exterior chimney does not benefit from the warmth of the building, so it typically operates at lower flue temperatures than an interior chimney and may experience increased creosote accumulation.

When connecting the Green Mountain 40 to a prefabricated metal chimney, you must follow, precisely, the manufacturer's installation instructions. Use only Type HT (2100° F), prefabricated metal chimneys listed per UL 103 or ULC S629 standards.

Ensure the size of the prefabricated chimney's flue is appropriate for the Green Mountain 40. The Green Mountain 40 requires a 6" (152 mm) inside diameter flue for new installations. A 6" diameter flue provides adequate draft and performance. You can use an 8" (203 mm) diameter existing flue with a reducer. An oversized flue contributes to creosote accumulation. (In this case, bigger is NOT better.)

When purchasing a prefabricated chimney to install with your stove, Ensure you also purchase from the same manufacturer the wall pass-through (or ceiling support package), "T" section package, fire-stops (when needed), insulation shield, roof flashing, chimney cap, and any other required accessories. Follow the manufacturer's instructions when installing the chimney and accessories. In addition, ensure you maintain all manufacturers' recommendations for the proper clearances to the chimney.

Connection to a Masonry Chimney

Consider two primary elements when connecting your stove to a masonry chimney: the chimney itself and the thimble where the stovepipe connects to the chimney. **Use only code approved masonry chimneys containing a proper flue liner.**

Before connecting to a masonry chimney, hire a professional to examine the chimney for cracks, loose mortar, and other signs of deterioration and blockage. If the chimney needs repair, complete them before installing and using your stove. Do not install your stove until the chimney is safe for use.

Ensure the chimney's cleanout is complete and working properly. To avoid a loss of draft, the cleanout door must close completely and provide a tight seal. If the cleanout door leaks, the chimney will cool, your stove will perform poorly, and creosote can form.

Ensure the size of the chimney's flue is appropriate for this stove and that it is not too large. Use a masonry chimney with a maximum 6" Diameter or 8" x 8" (203 mm x 203 mm) tile size for best results. An oversized flue contributes to the accumulation of creosote.

Use the following checklist to ensure that your masonry chimney meets these minimum requirements:

MASONRY CHIMNEY WALL CONSTRUCTION:

- Mortared brick or modular block at least 4" (102 mm) thick – must use liner
- A mortared rubble or stone wall – must use liner

FLUE LINER OPTIONS:

- Tile - minimum wall thickness of 5/8" (16 mm), installed with refractory mortar, and with at least 1" (25 mm) air space around the liner
- Stainless steel - UL listed 6" diameter, insulated filled with vermiculite or suitable material (these keep the liner warmer for better performance)
- Ensure any equivalent flue liner is a listed chimney liner system meeting type HT requirements or other approved material.

INTERIOR CHIMNEY REQUIREMENTS:

- Must have at least 2" (51 mm) clearance to combustible materials
- Must install fire stops at the spaces where the chimney passes through floors and/or ceiling
- Any insulation material must be at least 2" (51 mm) from the chimney

EXTERIOR CHIMNEY REQUIREMENTS:

- At least 1" (25 mm) clearance to combustible materials

CHIMNEY HEIGHT REQUIREMENTS (SEE *FIGURE 9*):

- At least 3 feet (0.9 m) higher than the highest part of the roof opening through which it passes.
- At least 2 feet (0.6 m) higher than any part of the roof within 10 feet (3 m) measured horizontally from the top of the chimney.

The recommended minimum chimney height is 10 feet (3 m) off the floor. The recommended maximum chimney height is 30 feet (9m).The Green Mountain 40 requires a draft between 0.06" and 0.1" water column. Ensure your chimney is long enough to provide the minimum draft, and use a damper if your installation has a required chimney height that provides too much draft.

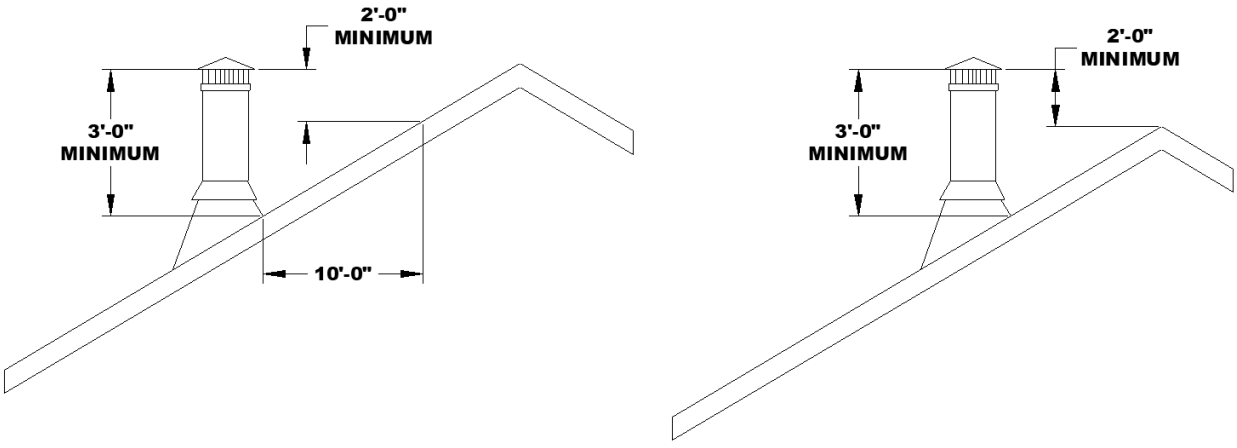

Figure 8 – Chimney Height Requirements

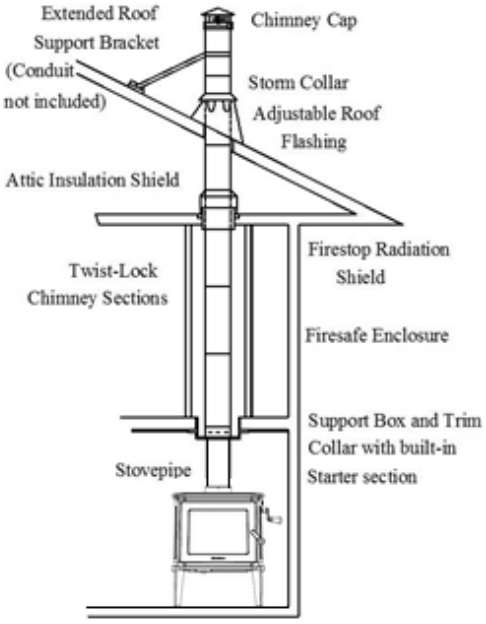

Two story house installation with attic.

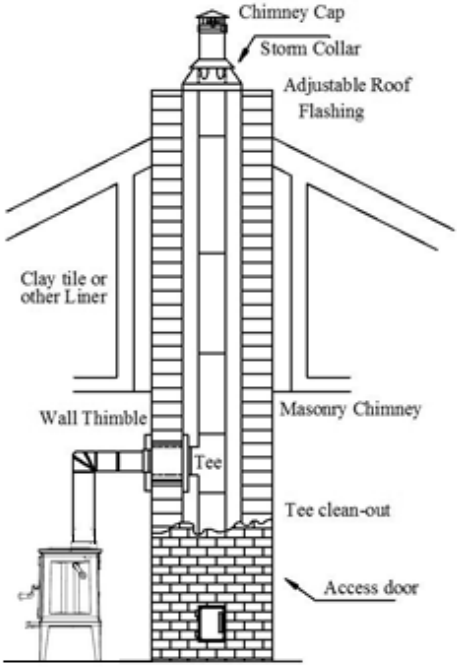

Chimney pipe through Clay tile
or other Lined Masonry Chimney

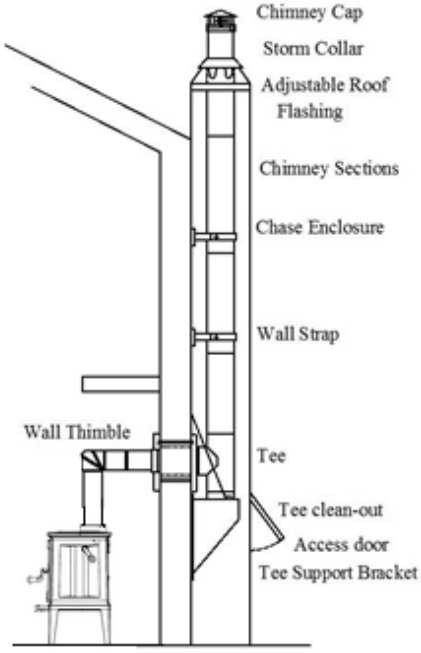

Chimney through outer wall with enclosed chase.
Chimney is supported by Tee Support Bracket.

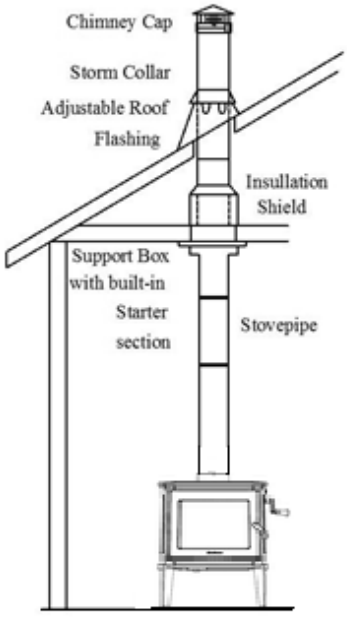

One story house installation with attic.
Chimney is supported by Ceiling.

Figure 9 – Typical Chimney Configurations

INSTALLING IN A MOBILE HOME

Follow these special requirements for installing your stove in a mobile home.

- Install the stove in accordance with 24 CFR, Part 3280 (HUD)
- An outside air kit must be used in all mobile home installations. See page 12 for details.
- Permanently attach the stove to your mobile home's floor. Use the shipping clips that came with the stove and fasteners long enough to attach securely to the subfloor. (The clips and fastener heads may be painted to minimize visibility).

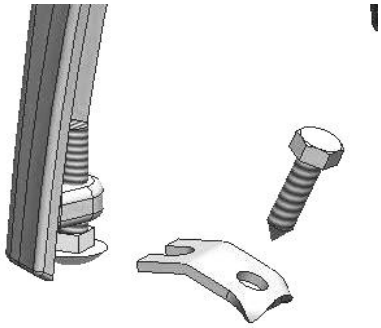

Figure 8 - Lock Down Detail

- Install a Mobile Home Chimney & Connector Kit*.

  Each kit must include:
  Stainless spark arrester cap, storm collar, Adjustable vented flashing – 0/12 – 6/12, Two 24" chimney pipes, 24" support box with built-in starter section and trim.

  * Install a Mobile Home Chimney and Connector Kit conforming to US/UL103 or CAN/ULC-S629, Standard for Factory-Built Chimneys.

- **WARNING: DO NOT INSTALL IN A SLEEPING ROOM IN A MOBILE HOME.**
- **CAUTION: MAINTAIN THE STRUCTURAL INTEGRITY OF THE MOBILE HOME WALLS, FLOOR, CEILING, AND ROOF WHEN INSTALLING AND USING YOUR STOVE**.
- **FAILURE TO FOLLOW THESE INSTRUCTIONS AND SPECIFIED COMPONENTS OR USING MAKE-SHIFT COMPROMISES CAN RESULT IN FIRE, PROPERTY DAMAGE, BODILY INJURY, AND EVEN DEATH.**
- **Burning any fuel other than wood in this unit could generate dangerous levels of carbon monoxide within the living space.**
- **THE FRONT DOOR MUST REMAIN CLOSED WHEN IN OPERATION EXCEPT FOR START UP AND LOADING. Leaving the door open during use could cause any smoke or fire detectors in the home to be set off or a fire could escape the firebox and start the room on fire.**
- **If this unit is installed in a mobile home, care must be taken to ensure adequate air is available. If not enough air is available it could starve the room of all the oxygen. (See page 27 for more details)**
- **The chimney should be attached directly to the stove and must extend at least 3 feet (.9 m) above the part of the roof through which it passes. The top of the chimney is to be at least 2 feet (.6 m) above the highest elevation of any part of the mobile home within 10 feet (3 m) of the chimney.**
- **All roof-chimney terminations should be able to be readily removed / re-installed at or below an elevation of 13-1/2 feet (4.1 m) above ground level without the use of special tools or instructions. The chimney assembly shall be provided with a mechanical securement means to secure the chimney to the ceiling support box.**
- **When a chimney exits the mobile home at a location other than through the roof, and exits at a point 7 feet (2.1 m) or less above the ground level on which the mobile home is positioned, a guard or method of enclosing the chimney shall be provided at the point of exit for a height up to 7 feet.**
- **The chimney guard shall not allow the passage of a ¾ inch (19.1 mm) diameter rod, and a ½" (12.7 mm) diameter rod shall not be able to touch the chimney when inserted through any part of the guard a distance of 4 inches (102 mm).**

- **The chimney shall be provided with a spark arrester secured to the chimney. The net free area of the arrester above the chimney outlet shall not be less than 4 times the net area of the chimney outlet, and the vertical height of the arrester above the chimney outlet shall not be less than ½ the diameter of the chimney flue. Openings shall not permit the passage of a sphere having a diameter of ½ inch (12.7 mm), and shall allow the passage of a sphere of 3/8" (9.6 mm).**

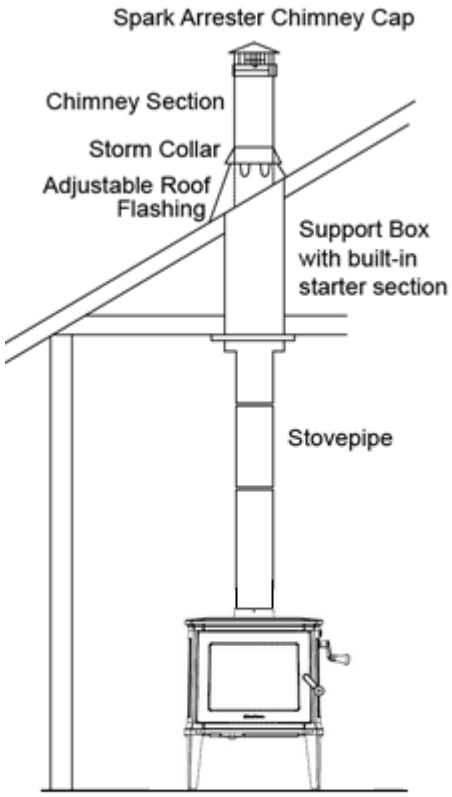

Mobile home installation.
One story house installation with attic.
Chimney is supported by Ceiling.

Figure - 9

- **CAUTION: REMOVE THE CHIMNEY WHEN TRANSPORTING THE MOBILE HOME!**

- Be sure to follow the manufacturer's instructions to maintain an effective vapor barrier at the location where the chimney of other component penetrates the exterior of the structure

OPERATION

Once your Green Mountain 40 is installed, you are ready to light a fire.

Every installation, season's firewood, and operator's technique varies. Learn how to use your stove most efficiently for your installation. We can give you the basic principles, but only you can ensure maximizing the potential of your stove while also operating it safely.

- **WARNING: HOT WHILE IN OPERATION! KEEP CHILDREN, PETS, CLOTHING AND FURNITURE AWAY. CONTACT MAY CAUSE SKIN BURNS.**

Read this entire chapter before lighting your first fire. It explains the controls and features of your wood stove, how to choose firewood, and how to use your stove on a daily basis.

CONTROLS AND FEATURES

Before lighting any fires, become familiar with the location and operation of your stove's controls and features and learn how to use them (*See Figure 10*). For your own safety, do not modify these features in any way. We recommend you use fireplace gloves when the stove is in operation and hot.

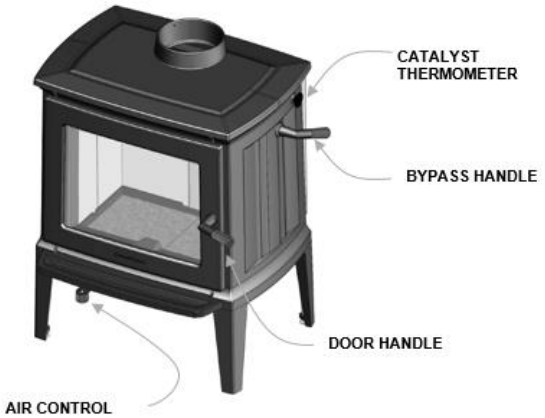

Figure 10 - Controls & Features

***FRONT DOOR HANDLE*:** The firebox door allows you to load wood into your stove; a wood handle operates the door. To open the door, pull up on the handle and swing the door away from the stove. To latch the door, push the door tightly towards the firebox then continue to push the handle in and down until it latches shut. Gently pull on the door handle to make sure it is properly latched.

PRIMARY AIR CONTROL: The primary air control lever is located under the ash lip. The primary air control allows you to regulate the amount of air entering the firebox. Generally, the more air allowed into the firebox, the faster the rate of burn and the higher the heat output; conversely, less air creates a slower burn, with lower heat output. For maximum airflow, pull the lever out as far as possible; move the lever inwards as far as possible for minimum airflow (does not close completely).

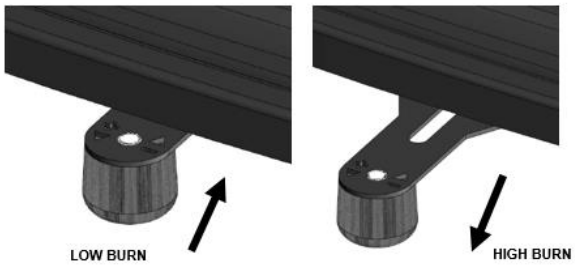

Figure 11 – Air Control

BYPASS HANDLE: The bypass handle controls the bypass door inside the stove. When the handle is pointed towards the front of the stove, the bypass door is open, and when the handle is pointed towards the rear of the stove, the bypass door is closed. The bypass door directs the flow of combustion products through or around the catalytic combustor. When the bypass handle is open, combustion products are directed around the catalytic combustor. The bypass handle should be open when first staring a fire until the catalytic combustor heats up to activation temperature, and whenever opening the front door to load the stove. When the bypass handle is closed, combustion products are directed through the catalytic combustor. The bypass handle should be closed once the catalytic combustor heats up to activation temperature, and remain closed whenever the stove is burning and in the active temperature range.

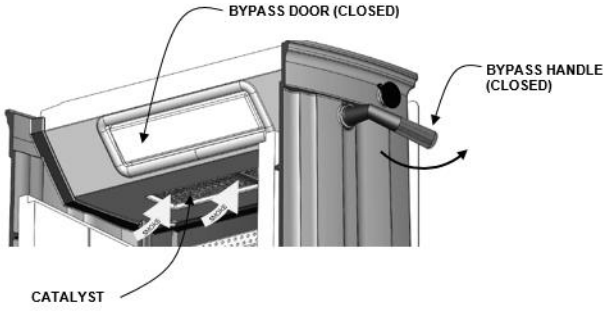

Figure 12 – Bypass Closed

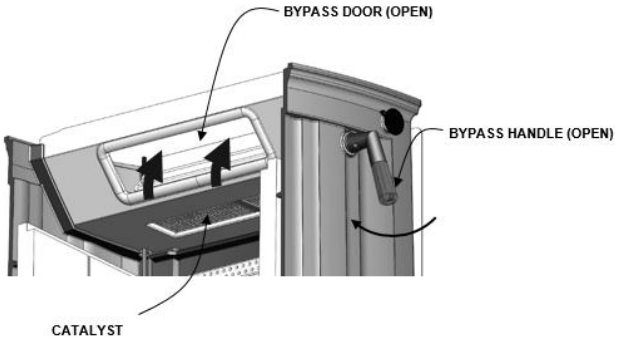

Figure 13 – Bypass Open

CATALYST THERMOMETER: The catalyst thermometer monitors the downstream temperature of the catalysts, and indicates when the stove is in the active range for the catalysts. When the stove is in the "active" range, the bypass handle should be closed. When the stove is in the "Inactive" range, the bypass handle should be opened until the stove heats up. If the thermometer is in the "Too Hot" range, keep the door closed, fully close the air control, and allow the stove to cool down until the thermometer falls into the "Active" Range. Once the catalyst thermometer has reached the active range, heat generated from burning smoke keeps the catalysts warm and active as long as fuel remains in the stove. The Green Mountain 40 typically operates in the 800 ºF to 1300 ºF range.

Figure 14 – Catalyst Thermometer

CHOOSING FIREWOOD

Burn only natural firewood (known as cordwood) in the Green Mountain 40 Model 8640 Wood Heater. This stove is not designed to burn other fuels.

- **CAUTION: DO NOT USE CHEMICALS OR FLAMMABLE FLUIDS TO START THE FIRE. DO NOT USE CHARCOAL, PELLETS, COAL, ARTIFICIAL LOGS OR ANY OTHER MATERIALS AS FUEL; THEY ARE NOT SAFE. DO NOT BURN GARBAGE OR FLAMMABLE FLUIDS.**
- **THE USE OF UNAUTHORIZED FUEL SUCH AS COAL COULD PRODUCE HIGH LEVELS OF CARBON DIOXIDE IN THE LIVING SPACE. AT HIGH LEVELS CARBON DIOXIDE COULD RESULT IN PERSONAL INJURY OR DEATH.**

The quality of your firewood directly affects heat output, duration of burn and performance of your stove. Softwoods generally burn hotter and faster, while hardwoods burn longer and produce better coals. Density and moisture content are two critical factors to consider when purchasing wood.

The following is a list of some wood species and their relative BTU (British Thermal Unit) content. The higher the BTU content, the longer the burn. Firewood with higher BTUs is generally ideal for a wood stove.

Burn untreated wood only. Other materials such as wood preservatives, metal foils, coal, plastic, garbage, sulphur, or oil may damage the catalysts.

Wood Heat Value: Sorted By Btu Content

Common Name	Lb/ cord	MBTU/ cord
High		
Osage Orange (Hedge)	4,728	32.9
Hickory, Shagbark	4,327	27.7
Hop Hornbeam (Ironwood)	4,267	27.3
Beech, Blue (Ironwood)	3,890	26.8
Birch, Black	3,890	26.8
Locust, Black	3,890	26.8
Hickory, Bitternut	3,832	26.7
Locust, Honey	3,832	26.7
Apple	4,100	26.5
Mulberry	3,712	25.8
Oak, White	4,012	25.7
Medium High		
Beech, European	3,757	24
Maple, Sugar	3,757	24
Oak, Red	3,757	24
Ash, White	3,689	23.6
Birch, Yellow	3,689	23.6

Medium		
Juniper, Rocky Mtn	3,150	21.8
Elm, Red	3,112	21.6
Coffee tree, Kentucky	3.112	21.6
Hackberry	3,247	20.8
Tamarack	3,247	20.8
Birch, Gray	3,179	20.3
Birch, White (Paper)	3,179	20.3
Walnut, Black	3,192	20.2
Cherry	3,120	20
Ash, Green	2,880	19.9
Cherry, Black	2,880	19.9
Elm, American	3,052	19.5
Elm, White	3,052	19.5
Sycamore	2,808	19.5
Ash, Black	2,992	19.1
Maple, Red	2,924	18.7
Fir, Douglas	2,900	18.1
Medium Low		
Boxelder	2,797	17.9
Alder, Red	2,710	17.2
Pine, Jack	2,669	17.1
Pine, Norway (Red Pine)	2,669	17.1
Pine, Pitch	2,669	17.1
Catalpa	2,360	16.4
Hemlock	2,482	15.9
Spruce, Black	2,482	15.9
Pine, Ponderosa	2,380	15.2
Low		
Aspen, American	2,290	14.7
Butternut (Walnut, White)	2,100	14.5
Spruce	2,100	14.5
Willow	2,100	14.5
Fir, Balsam	2,236	14.3
Pine, White (Eastern, Western)	2,236	14.3
Fir, Concolor (White)	2,104	14.1
Basswood (Linden)	2,108	13.8
Buckeye, Ohio	1,984	13.8
Cottonwood	2,108	13.5
Cedar, White	1,913	12.2

Moisture content also plays a key role in the performance of your stove. Wood freshly cut from a living tree (green wood) contains a great deal of moisture. As you might expect, green wood burns poorly. You must season green wood before using it in your wood stove. To season green wood properly, split, stack, and allow it to air dry for a period of one year. Green wood may provide less than 2000 Btu per pound, whereas dry wood can provide up to 7000 Btu per pound.

Stack the firewood on skids or blocks to keep it off the ground, cover only the top of the stack. Plastic or tarps that cover the sides of the woodpile trap moisture and prevent the wood from drying. As for stacking, an old Vermonter said, "The spaces between the logs should be large enough for a mouse to get through, but not for the cat that's chasing it."

- **CAUTION: DO NOT STORE FIREWOOD WITHIN THE STOVE'S SPECIFIED CLEARANCES TO COMBUSTIBLE MATERIALS.**

BUILDING A FIRE

Once you understand the controls of your wood stove and have the appropriate firewood, you are ready to start a fire.

- **WARNING: NEVER USE GASOLINE, GASOLINE-TYPE LANTERN FUEL, KEROSENE, CHARCOAL LIGHTER FLUID, OR SIMILAR LIQUIDS TO START OR 'FRESHEN UP' A FIRE IN THIS HEATER. KEEP ALL SUCH LIQUIDS WELL AWAY FROM THE HEATER WHILE IT IS IN USE.**

BREAKING IN YOUR WOOD STOVE

It is imperative that your stove is "broken in" gradually. Soapstone must be "seasoned"; over-firing a new stove may cause soapstone to crack or may damage other stove parts. Natural moisture in the freshly quarried soapstone must be driven out slowly to minimize the “shock” to the stone of its first exposure to high firebox temperatures. In addition, the asbestos-free furnace cement must be cured slowly to ensure adequate sealing and bonding.

When you light your first fires, the woodstove will emit some smoke and fumes. This is normal “off-gassing” of the paints and oils used when manufacturing the woodstove. If you find it necessary, open a few windows to vent your room. The smoke and fumes will usually subside after 10 to 20 minutes of operation. The odor and smoke will end once the stove is “cured”.

The first few fires of the season may produce other odors from impurities that exist in the area immediately surrounding the stove. Some potential impurities are cleaning solvents, paint solvents, cigarette smoke, and soot from scented candles, pet hair, dust, adhesives, a new carpet, and new textiles.

These odors will dissipate over time. You can alleviate these odors by opening a few windows or otherwise creating additional ventilation around your stove. If any odor persists, contact your dealer or an authorized service technician.

If you adhere to the operating procedures in this manual, the steel, cast iron, and soapstone components of your stove will give you many years of trouble-free use. With use, the color of the soapstone may change and small fractures may appear on the surface. These changes do not affect the function of the stove. If a panel breaks completely, it must be replaced

Avoid the following conditions that can cause the glass, soapstone, steel or cast iron pieces to break:

- Do not throw wood into the stove.
- Do not use the door as a lever to force wood into the stove.
- Do not load wood encrusted with ice into a burning stove - the thermal shock can cause damage.
- Do not use a manufactured log grate or otherwise support the fuel. Burn the fire directly on the floor of the firebox.

BUILDING A BREAK IN FIRE

1) Open the bypass handle.Open the front door and place five or six double sheets of tightly twisted newspaper in the center of the firebox. Arrange kindling in a crisscross pattern over the newspaper. Kindling should be approximately ten pieces, 1/2" (13 mm) in diameter and 10" to 16" (254 mm to 457 mm) long.
2) Fully open the primary air control by pulling the control handle towards you, away from the firebox.
3) Light the paper under the kindling. Leave the door slightly ajar momentarily until the kindling has started to burn and draft begins to pull.
4) Close the door and allow the fire to burn. Keep the door closed while the stove is in use.
5) KEEP A WATCHFUL EYE ON YOUR STOVE to maintain a steady, low-heat fire. Your first fire should make the stove warm but **not hot to the touch**. Visible steam, or boiling moisture and hissing indicate the soapstone is too hot. At most, a few small chunks of wood should be added to the fire to reach safe break-in temperatures.
6) Once the stove is warm but **not hot to the touch,** close the primary air control by pushing it fully inward toward the stove to allow the fire to die out completely.
7) Let the stove return to room temperature.

Your first fire and first fire each season thereafter should be built and maintained as outlined above. Your patience will be rewarded by a properly seasoned stove.

- NOTE: The cool flue gas temperatures present during the break-in procedure may cause rapid creosote build-up. The door glass may also get dirty. A good hot fire will clean it. We recommend a visual inspection (and cleaning if necessary) of your stovepipe and chimney once the break-in procedure is completed.

NORMAL OPERATION

BUILDING A FIRE FOR EVERYDAY USE

1) Open the bypass handle. Open the front door and place five or six double sheets of tightly twisted newspaper in the center of the firebox. Arrange kindling in a tee-pee configuration over the newspaper. Use approximately 10 pieces of kindling, 1/2" (13 mm) in diameter and 10" to 16" (254 mm to 406 mm) long.
2) Fully open the primary air control by pulling the lever completely out, away from the firebox.
3) Light the paper under the kindling. Leave the front door slightly ajar momentarily until the kindling begins to burn and draft begins to pull.
4) Close the door and allow the fire to burn.
5) Once the kindling is burning, open the front door and add logs, small at first, to build the fire up. Ensure you keep the logs away from the glass in front in order for the air-wash system to work properly. Keep the front door closed while the stove is in use.

   CAUTION: DO NOT BUILD THE FIRE TOO CLOSE TO THE GLASS. KEEPING THE FIRE TOWARDS THE CENTER OF THE FIRE BOX WILL KEEP COALS FROM BUILDING UP AGAINST THE GLASS DURING RELOADING.
6) Once the fire is burning well, and the catalyst thermometer indicates that the stove is in the active range, close the bypass handle. Now the combustion products are passing through the catalytic combustor, and your stove will be burning at its optimal efficiency.

7) After closing the bypass door, allow the stove to run on a high setting for around 20 minutes to ensure the catalytic combustor stays in the active range. This will also allow the fire to burn off any residue on the door glass from any previous low-burn fires

8) Use the primary air control to regulate the desired rate of burn. Pull the handle towards you for a higher burn rate, and push the handle towards the stove for a lower burn rate. The air control does not close completely.

Note: Always remember to open the bypass handle before opening the front door. When opening the front door to reload or re-arrange logs, it is advisable to open the door just a crack, pause for a moment then open the door completely. This procedure allows the firebox to clear of smoke before the door is open fully. In addition, reloading on a bed of hot, red coals reduces smoking time and brings fresh fuel up to a high temperature rapidly. During the refueling and rekindling of a cool fire, or a fire that has burned down to the charcoal phase, operate the stove at a medium to high firing rate for about 10 minutes to ensure that the catalysts reach approximately 600 °F. Once the catalysts reach operating temperature, the bypass handle can be closed. When reloading the stove, try to keep an open path behind the Lower Primary Air Opening (LPAO). It is helpful to leave a small valley in the coal bed behind the LPAO to insure faster re-lighting.

CATALYTIC COMBUSTOR OPERATION

The Green Mountain 40 uses a catalytic combustor to ensure highly clean and efficient burns. The catalytic combustor is made from a stainless steel corrugation that is coated with a catalytic material. The catalytic combustor becomes active around 500 ºF (260ºC), helping to burn up smoke and any remaining particles that were not fully burned in the firebox. During the startup of a cold stove, a medium to high firing rate must be maintained for about 20 minutes. This ensures that the stove, catalysts, and fuel are all stabilized and at proper operating temperatures. Even though it is possible to have gas temperatures reach 500 °F (260ºC) within 2 to 3 minutes after a fire is started, if the fire is allowed to die down immediately, it may go out or the combustor may stop working. Once the stove and catalytic combustor heat up, heat generated from burning smoke keeps the catalysts warm and active as long as fuel remains in the stove. You stove will burn the cleanest and most efficiently when the catalysts are in the active range. There should be little to no visible smoke from your chimney when the catalysts are in the active zone and fully functional.

BURN RATE

This wood heater has a manufacturer-set minimum low burn rate that must not be altered. It is against federal regulations to alter this setting or otherwise operate this wood heater in a manner inconsistent with operating instructions in this manual

LOW BURN: Move the air control lever all the way inward toward the stove. (*See figure 13*). This closes the air shutter to its minimum opening. A low burn rate over extended periods is not advisable as it can promote the accumulation of creosote. Inspect the venting system frequently if using low burn rates consistently.

MEDIUM LOW BURN: With the primary air control in the low position, pull the air control forward (a little less than 1/4”). A medium-low burn rate is the typical setting and is preferable if the stove is unattended. At this burn rate, a little goes a long way.

MEDIUM HIGH BURN: With the primary air control in the low position, pull the air control forward (a little less than 3/8”)

HIGH BURN: Completely open the primary air control by moving it all the way outward toward the operator. Fully load the firebox with wood on a bed of hot coals or on an actively flaming fire. To minimize creosote accumulation, run the stove on high once or twice daily for 35 to 45 minutes to fully heat the stovepipe and chimney.

CAUTION: Do not burn fuel other than cordwood in your stove.

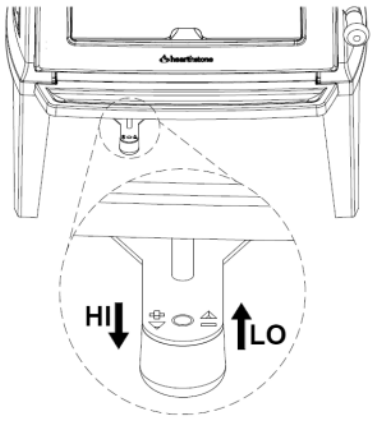

Figure 15 – Air Control Position

OVER-FIRE CAUTION

Over-firing means the stove is operating at temperatures above normal temperatures reached during High Burns outlined in the *BURN RATE* section. Carefully avoid over-firing, as it will damage the stove. Symptoms of chronic over-firing can include warped components, short burn times, a roaring sound in the stove or stovepipe, and discoloration of the stovepipe. A properly installed stove using fuel and following operating procedures as outlined in this manual should not over-fire.

Excessive draft, inappropriate fuel, and operator error can cause over-firing. Correct an over-fire situation as follows:

- **EXCESSIVE DRAFT:** Contact your local dealer to have a draft reading taken. Any draft in excess of 0.1 WC requires a damper in the stovepipe. Some installations may require more than one damper.
- **INAPPROPRIATE FUEL:** Do not burn coal; kiln dried lumber, wax logs, compressed wood, highly volatile fuels or combustibles, or anything other than natural cordwood.
- **OPERATOR ERROR:** Ensure all the gaskets are in good condition. Replace worn out or compressed gaskets. Only burn the stove with the firing and ash doors in the closed position.

If you suspect your stove is over-firing, discontinue use and contact your dealer immediately. **Damage caused by over-firing is not covered by your warranty**. Results of over-firing can include warped or burned out internal parts, cracked refractory panels, discolored or warped external parts, and damaged finish.

- **ANY SIGNS OF OVER-FIRING WILL VOID YOUR WARRANTY!**
- **THE FRONT DOOR MUST REMAIN CLOSED WHEN IN OPERATION**

REMOVAL AND DISPOSAL OF ASHES

You can leave a thin layer of ashes in the firebox if preferred. Allow fire to die down or go out completely.

It is important to prevent ashes from building up around the front door opening or they will spill out, or they can pack into the gasket channel and prevent proper sealing. To remove ashes, use a fireplace shovel. Avoid removing large live coals by pushing them to the side and removing only the finer ash with a shovel.

Disposal of ashes - Ashes should be placed directly into a **metal** container with a tight fitting lid. Do not place any other items or trash into the metal container. Do not pour water into the container. Replace the container's lid and allow the ashes to cool. Never place the ash disposal container on a combustible surface or vinyl flooring, as the container could be **hot!**

Pending disposal, place the closed ash container on a noncombustible floor or on the ground outside, well away from all combustible materials, liquid fuels, or vehicles. Retain ashes in the closed container until all coals thoroughly cool.

If the ashes are disposed of by burial in soil or otherwise locally dispersed, they should be retained in the closed container until all cinders have thoroughly cooled.

NEVER place ashes in wooden or plastic containers, in trashcans with other trash, or in paper or plastic bags, no matter how long the fire has been out. Coals within a bed of ashes can remain hot for several days once removed from the firebox.

MAINTENANCE

CATALYTIC COMBUSTOR INSPECTION AND REPLACEMENT PROCEDURES

- **WARNING: THIS WOOD HEATER CONTAINS A CATALYTIC COMBUSTOR, WHICH NEEDS PERIODIC INSPECTION AND REPLACEMENT FOR PROPER OPERATION. IT IS AGAINST FEDERAL REGULATIONS TO OPERATE THIS WOOD HEATER IN A MANNER INCONSISTENT WITH OPERATING INSTRUCTIONS IN THIS MANUAL, OR IF THE CATALYTIC ELEMENT IS DEACTIVATED OR REMOVED**

It is important to periodically monitor the operation of the catalytic combustor to ensure that it is functioning properly and to determine when it needs to be replaced. A non-functioning combustor will result in a loss of heating efficiency, and an increase in creosote and emissions. Following is a list of items that should be checked on a periodic basis

-Combustors should be visually inspected at least three times during the heating season to determine if physical degradation has occurred. Actual removal of the combustor is not recommended unless more detailed inspection is warranted because of decreased performance. If any of these conditions exists, refer to Catalyst Troubleshooting section of this owner's manual.

-This catalytic (or hybrid) heater is equipped with a thermometer to monitor catalyst operation. Properly functioning combustors typically maintain temperatures in excess of 500 °F, and often reach temperatures in excess of 1,000 °F. If catalyst temperatures are not in excess of 500 °F, refer to the Catalyst Troubleshooting section of this owner's manual.

-You can get an indication of whether the catalysts are working by comparing the amount of smoke leaving the chimney when the smoke is going through the combustor and catalysts light-off has been achieved, to the amount of smoke leaving the chimney when the smoke is not routed through the combustor (bypass mode).

1. Light stove in accordance with operator's instructions
2. With smoke routed through the catalysts, go outside and observe the emissions leaving the chimney.
3. Engage the bypass mechanism and again observe the emissions leaving the chimney. Significantly more smoke will be seen when the exhaust is not routed through the combustor (bypass mode)

INSPECTING THE CATALYSTS AND REMOVING/REPLACING THE BAFFLE

1. Allow the stove and ashes to fully cool.
2. Remove the metal baffle protector by sliding it to the left or right, and then rotating it towards you.
3. Lift up on the right side baffle, and gently pull the left side baffle down and out of the stove

CAUTION - Do not force the baffle pieces. Gently adjust the baffle orientation until each side can be removed freely from the stove.

Figure 16 - Removing/Replacing the Baffle for Inspection

Figure 16 (cont.) - Removing/Replacing the Baffle for Inspection

4. Use a small vacuum nozzle or soft bristled brush to remove any accumulated ash or stoot on the face of the catalysts.
5. Inspect the catalysts for any unusual warping, corrosion, or plugged openings.
6. If any unusual conditions are found, remove the catalyst blocks – See replacing the catalysts.
7. Replace the baffles and baffle protector. Installation is the opposite of removal.
8. Ensure that the baffle pieces are pushed together at the center joint.

REMOVING OR REPLACING THE CATALYSTS

Refer to the Catalytic combustor warranty on page 35 for catalyst replacement information. DO NOT OPERATE UNIT WHITOUT CATALYSTS. Only remove the catalysts if required. In general, the less you handle the catalysts, the better. If any unusual conditions are found, remove the catalyst blocks

1. Allow the stove and ashes to fully cool.
2. Loosen, but do not remove the screws securing the rear heatshield. (If stove is so equipped).

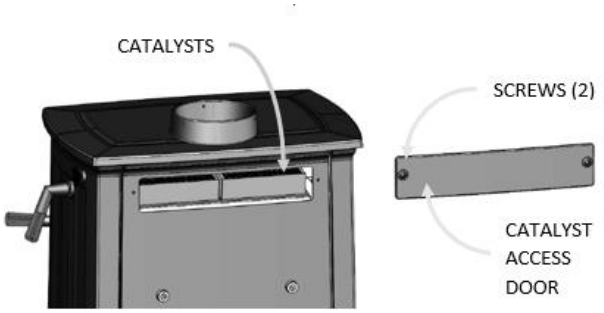

Figure 17 – Catalyst Access Door

3. Remove the heat shield by sliding the screw heads through the slots in the heatshield.
4. Remove the 2 bolts securing the cast iron catalyst access cover, and remove the cover.
5. Inspect the catalysts for visible damage or fly ash. If fly ash exists, gently brush the catalysts off with a narrow soft-bristle brush, or vacuum with a crevice tool.
6. If fly ash exists, or if there are suspected catalyst performance issues, fully remove the catalysts by gently pulling upwards from the ribs in the cast iron, and then pulling outwards through the catalyst access opening.
7. Remove any remaining gasket material from the opening and from the catalysts.
8. Inspect the catalysts for any fly ash or clogging, and remove with a soft bristled brush or vacuum crevice tool. If extra cleaning is needed, follow the guidelines below:
   -You may use compressed air under 35 psi, air only, no chemicals.
   -You may soak the catalysts in a hot water mix (not boiling), 4 parts water, 1 part vinegar. Rinse with cold water until vinegar smell is mostly gone.
   -No metal tools such as gun cleaners should be used.
   -No detergents or chemicals.

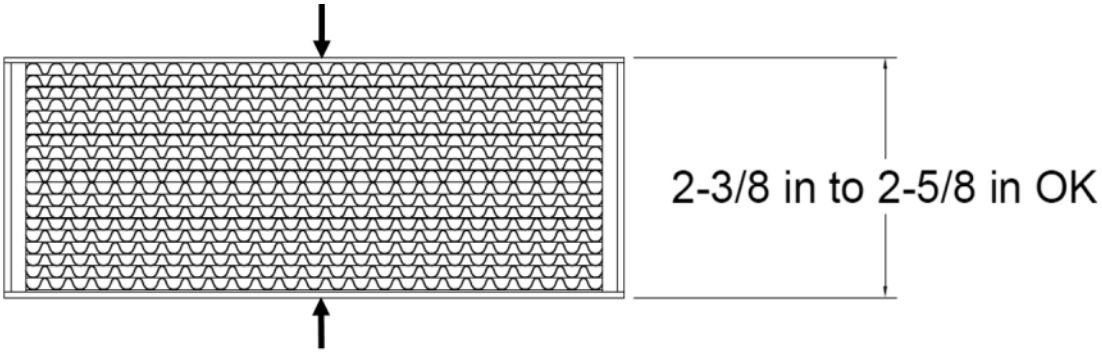

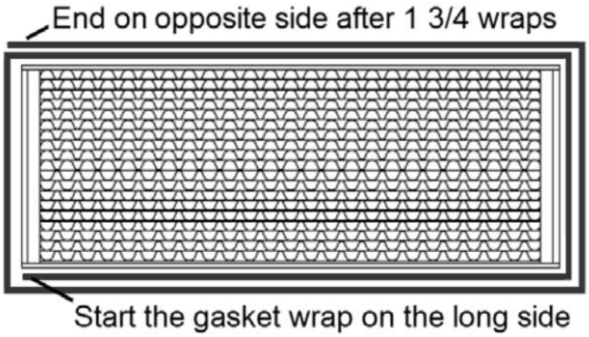

Figure 18 - Acceptable Ca

9. Some warping or bowing of the catalysts over time is acceptable, as long as the catalyst gasket continues to seal. Measure the catalysts in the middle section – if the dimensions are outside the range shown in Figure 18, replace the catalysts.
10. Beginning at one corner, re-install fiberglass gasket material on the catalysts.

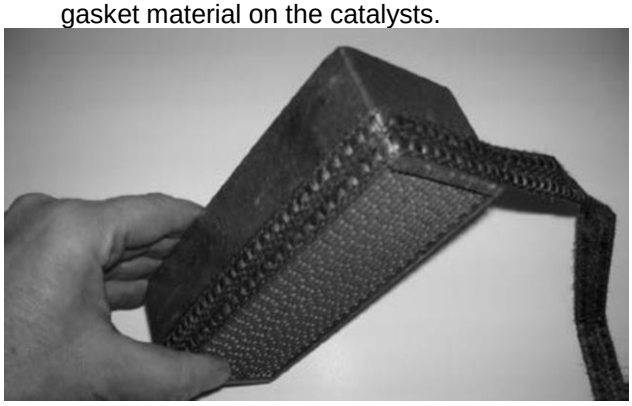

11. Wrap the gasket tape around the catalysts so it is reasonably tight. Double layer the material on three sides of the individual catalyst cartridges as shown in the following picture.

12. Once the gasket is installed on the catalysts, gently push the catalysts into the catalyst opening until the catalysts hit against the back wall of the cavity. Take care to ensure the gasket is not damaged and position the two cartridges so that the single layer gasket edges touch one another in the center. Replace the catalyst access door.

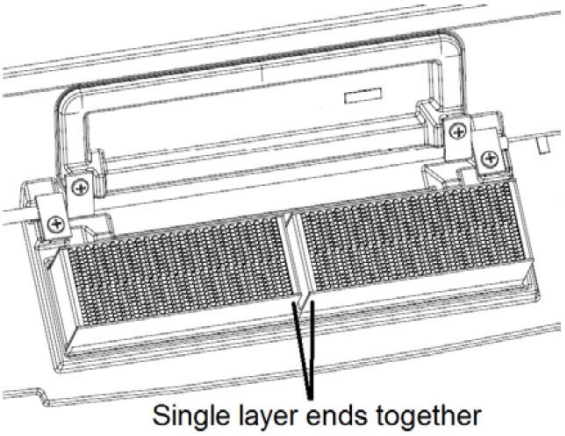

13. Replace catalyst access door.
14. Heat the stove slowly during your next fire to allow the Interam gasket to fully expand and seal the catalysts.

REPLACING THE REFRACTORY STONE AND SECONDARY RISER ASSEMBLY

1. Allow the stove and ashes to fully cool.
2. Open the front door of the stove and fully clean any ash in the firebox
3. Remove the baffle following the instructions in “Inspecting the Catalysts and Removing/Replacing the baffle.
4. Remove the side stones one at a time by tipping them towards the inside of the firebox from the top.
5. With side stones and baffle removed, the secondary riser assembly and rear stones can be lifted up and out of the stove.
6. Installation is the reverse of disassembly. Make sure that the secondary riser tube is seated in the pocket at the rear of the bottom casting.

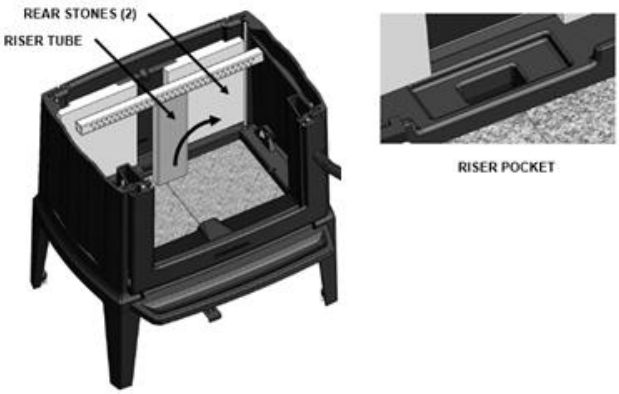

Figure 19 - Removing Riser and Rear Stones

GLASS REPLACEMENT PROCEDURES

- **WARNING: DO NOT OPERATE THIS APPLIANCE WITH THE GLASS PANEL REMOVED, CRACKED, OR BROKEN. DO NOT SUBJECT THE DOOR TO ABUSE, SUCH AS STRIKING OR SLAMMING SHUT. ONLY A QUALIFIED SERVICE PERSON SHOULD REPLACE THE GLASS PANEL.**

1. Follow the instructions included with the replacement glass kit.
2. Remove the door.
3. Remove the screws from the glass clips (use penetrating oil if necessary) – Set aside for reinstallation.
4. Carefully lift the damaged glass off the door and discard.
5. Remove any remaining glass and old gasket material.
6. Clean the screw holes and place a small amount of anti-seize compound in each one.
7. Install a new glass gasket in the glass gasket groove.
8. Place the new glass onto the door.
9. **Important! Center the glass** and ensure that the edges of the glass are parallel with the edges of the opening.
10. Check glass position again (centered, and parallel), then screw the glass retainer clips with the glass pads back on the door using a crisscross pattern. Tighten the screws no more than 1/8th of a turn after they seat. The glass will break at this point if not positioned correctly.
11. Apply a light film of anti-seize lubricant on the door’s hinge pins if needed.
12. Install the door.
13. After 5 or 6 fires, check the glass retainer screws, and retighten if necessary.

Required Glass Kit: Part Number: 96-58405. Use only 4mm x 329mm x 395mm Ceramic, or Neoceram glass. Contact your Hearthstone dealer.

of the secondary combustion system that minimizes

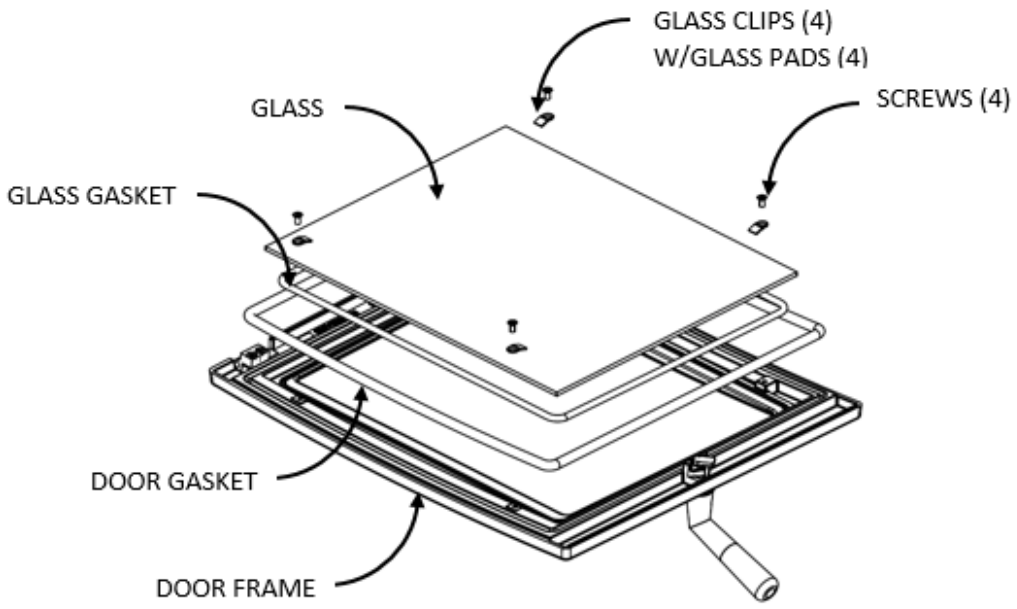

Figure 20: Front Door assembly

CREOSOTE FORMATION & REMOVAL

When wood burns slowly at low temperatures, it may produce tar and other organic vapors, which combine with expelled moisture to form creosote. These creosote vapors condense in the relatively cool chimney flue of a slow-burning fire. As a result, creosote residue accumulates on the flue lining. When ignited, this creosote makes an extremely hot fire, which may damage the chimney or even destroy the house. When burning wood, inspect the chimney connector and chimney at least once every two months during the heating season to determine if there is a creosote buildup.
If a creosote build-up occurs, inspect the stovepipe connector and chimney more often, at least monthly during the heating season to monitor the accumulation. If a creosote residue greater that 1/4" (6 mm) accumulates, remove it to reduce the risk of a chimney fire.

PREVENTION

Burn the stove with the primary air control fully open for 35 - 45 minutes daily to burn out creosote deposits from within the stove and the venting system.

After reloading with wood, burn the stove with the primary air control fully open for 15 to 20 minutes. This manner of operation ensures early engagement creosote buildup in the chimney.

If your glass always remains dirty, your operating temperatures are too low or your wood is wet; therefore, there is a higher risk of creosote buildup.

Inspect the venting system at the stove connection *and* at the chimney top. Cooler surfaces tend to build creosote deposits faster, so it is important to check the chimney at the top (where it is coolest) as well as from the bottom near the stove.

CLEANING

Remove accumulated creosote with a cleaning brush specifically designed for the type of chimney in use. We recommend you use a certified chimney sweep to perform this service. Contact your dealer for the name of a certified chimney sweep in your area (your dealer may be a certified sweep!).

We recommend that before each heating season you have the entire system professionally inspected, cleaned and repaired, if necessary.

GASKETS

Replace door gasket material every two to three seasons, or whenever it becomes deteriorated or loose, depending on stove use. If the door seal leaks, a new gasket will ensure a tight seal and improve stove performance.

We recommend you only use Hearthstone replacement gaskets when you need to replace your door gasket. Contact your dealer for a gasket kit that includes instructions, and the gasket for your stove.

GLASS

The glass used in our stoves is actually not plain glass, but a tough, clear ceramic material capable of operating at temperatures up to 2300° F. Do not operate the stove with a broken door glass. Do not abuse the front door by striking or slamming.

When necessary, clean the glass. For the inside surface of the glass, we recommend using a damp paper towel dipped in gray ash. Rub the inside of the glass with a circular motion. When all the deposits are removed, clean up with window cleaner or with commercial stove glass cleaners, which are available from your local dealer. Use this type of cleaner for the outside surface as well. Never attempt to clean the glass while the fire is burning or while the glass is hot. Remove deposits by following the instructions provided with the cleaner. Wipe the cleaner off with a soft cloth, or black & white newsprint.

> **Important:** scratching or etching the glass will weaken the integrity of the glass. Do not use a razor blade, steel wool, or any other abrasive material to clean the glass. Use a cleaner specifically manufactured for woodstoves only.

The front door glass is a ceramic, thermal shock-resistant glass, made specifically for use in woodstoves. Do not use any replacement glass other than the ceramic glass manufactured and supplied for use in this woodstove. Replacement glass is available through your local dealer.

Replace the door glass immediately if broken or chipped. Contact your local dealer for replacement glass. The glass kit includes instructions and everything needed for the repair. If you replace the glass yourself, wear work gloves and safety glasses.

Required Glass Kit: PN: 96-58405.

TROUBLESHOOTING

COMMON ISSUES

Virtually all woodstove operators experience basic common problems at one time or another. Most are correctable and generally require only a minor adjustment of the stove, installation, or operating technique. In cases where weather conditions dramatically affect stove performance, the problems are typically temporary and solve themselves once the weather changes.

If you question whether your stove is producing adequate heat, the best way to troubleshoot the problem is to monitor the temperature of the stack no more than 12 inches (30 cm) above the flue collar. A 400° F (200° C) stovepipe confirms the stove is supplying sufficient heat. Keep in mind that your house itself will regulate room/house temperatures. How well the walls, floors and ceilings are insulated, the number and size of windows, the tightness of outside doors, and the construction or style of your house (vaulted ceilings or other open spaces which collect large percentages of heat, ceiling fans, etc.) all are determining factors of room temperature.

Your stove's performance is also dependent on its installation. One common cause of poor performance is an oversized chimney flue. Oversized chimney flues result in decreased draft, which prevents the smoke from rising out the chimney. Oversized flues are also more difficult to heat effectively, especially when burning a high efficiency stove. Cool flue temperatures inhibit the establishment of a strong draft (and encourage the accumulation of creosote). The lack of a strong draft will cause the fire to die down and may even force smoke to pour into the room.

If your chimney is the proper size and a strong draft is not easily established, there is the possibility that the chimney is too cold. Again, hot chimneys promote stronger drafts. Opening a window briefly in the room while lighting the stove may help.

Other draft guidelines are as follows:

An **"AIRTIGHT" HOUSE:** The air supply (infiltration) to the interior of the house may be inadequate if your home is super-insulated or especially well sealed. This phenomenon of air starvation within the building is exacerbated if exhaust fans, such as clothes dryers, bathroom fans or cook stove exhaust fans, are in operation within the home. Outfitting your stove with the optional outside air adaptor connected to an air duct, which leads to the outside of the building, can correct this problem.

Tall Trees or Buildings: These obstructions, when located close to the top of the chimney can cause chronic or occasional downdrafts. When selecting a site for a new chimney, consider the placement of other objects near the proposed chimney location.

Wind Velocity: Generally, the stronger and steadier a wind, the stronger (better) the draft. However, "gusty" wind conditions can cause erratic downdrafts. For consistent problems, consider a high wind cap, such as the Vacu-Stack.

Barometric Pressure: Chimney drafts are typically sluggish on balmy, wet or muggy days (low barometric pressure). This is a weather-related phenomenon, which generally is self-correcting as the weather changes.

Briskness of Fire: The hotter the fire in your stove, the hotter your chimney and, therefore, the stronger the draft.

Breaks in the Venting System: An unsealed clean-out door at the bottom of the chimney, leaky stovepipe joints, a poor stovepipe-to-thimble connection, missing caps, or a leaky chimney all can cause inadequate draft.

Seasonal Factors: Early fall and late spring are generally difficult seasons in which to establish proper drafts. The colder the outside air is relative to room temperature, the stronger the draft.

OPERATING THE STOVE

As outlined above, there are days when a good draft is just not easy to establish. The causes are usually seasonal factors or a cold chimney. Try starting the fire by using small kindling and fuel to obtain a quick, hot fire. Tend the fire frequently with small fuel until the chimney is hot and the draft is well established. Sometimes, partially opening a first floor window briefly will help quickly get draft established.

TROUBLESHOOTING GUIDE

PROBLEM	POSSIBLE CAUSE	SOLUTIONS
STOVE SMOKES	Operating Technique	Fully open the primary air control one minute before opening doors, and ensure the bypass is open before opening door.
	Cold Chimney or reverse draft	Preheat the chimney when first starting a fire. Briefly open a window in the room containing the stove.
	Blocked Chimney	Examine the chimney and stovepipe for blockage or creosote accumulations.
	Oversized Chimney	Reline the chimney to the appropriate diameter
	Undersized Chimney	Install a draft inducer or replace the chimney.
	Chimney Too Short	Lengthen the chimney.
	Air Infiltration Into The Chimney	Seal chimney connections and openings. Check clean-out doors.
	Bypass not closed	Ensure that the bypass door is closed when the catalysts are in the active range.
	Catalysts not functioning	Inspect catalysts for damage, ash build-up, or plugging. Brush catalysts with a soft-bristled brush, or vacuum lightly. Replace if required. Follow instructions to ensure catalyst light-off.
	Not burning proper fuel	Ensure cordwood is seasoned and dry.
	More Than One Appliance Connected to the Flue	Disconnect all other appliances and seal openings.
BACK-PUFFING OR GAS EXPLOSIONS	Operating Technique	Fully open the primary air control one minute before opening the door and keep it fully open for a few minutes after reloading. Ensure the bypass door is open before opening the door
	Extra Low Burn Rate	Burn the stove at a higher burn rate.
	Chimney Down-draft	Install a chimney cap.
	Excessive Ash Build-up	Empty the ash pan more frequently. Increase efficiency of burns, and avoid using poor quality or green wood.
UNCONTROLL-ED OR SHORT BURN	Unsealed or Open Door	Close the door tightly or replace the gaskets. Air leakage around glass gasket – replace gasket
	Excessive Draft	Check the installation. Operate at LOW BURN. Install stovepipe damper. Draft in excess of 0.1 wc should be corrected with a stovepipe damper(s)
	Extra Long Chimney	Shorten the chimney. Install stovepipe damper(s).
	Oversized Chimney	Reline the chimney to the proper diameter.
	High Winds or Hilltop Location:	Install a chimney cap.
INSUFFICIENT HEAT	Poor Quality, low Btu content, or Green Wood	Use only air-dried wood, preferably dried at least one year. Use a wood with a high Btu content if available.
	Low Burn Rate	Operate the stove at a higher burn rate.
	Cold Exterior Chimney	Reline or insulate the chimney.
	Leaky Stovepipe or Chimney	Check the installation. Replace with a pre-fabricated insulated chimney system or a properly sized masonry chimney.
	Too Much Heat Loss From House	Add insulation, use energy efficient windows, or caulk windows, and seal openings in home.
	Excessive Ash Build-up	Empty the ash pan more frequently. Increase efficiency of burns, and avoid using poor quality or green wood.
BLISTERING OF FINISH	Operating Technique	Do not over-fire the stove. Monitor stove temperatures. Use seasoned wood only.
	Excessive Draft	Check the DRAFT. A damper may be required. Operate the stove at a LOW BURN range.

ADDITIONAL CATALYST TROUBLESHOOTING GUIDE

PROBLEM	POSSIBLE CAUSE	SOLUTIONS
FLY ASH BUILD UP ON CATALYSTS	Catalysts have not maintained light-off temperature	Brush cold combustor with soft-bristled brush or vacuum lightly. Follow instructions in the manual for a proper catalyst light-off
	Burning materials that cause a lot of char and fly-ash	Don't burn cardboard, gift wrap paper, or garbage. Burn only dry, seasoned wood, per the owner's manual.
	Bypass closed too soon	Follow instructions in the manual for a proper catalyst light-off
CATALYSTS PLUGGING OR MASKING (SOOT/CRESO-TE)	Burning wet, pitchy woods, or burning large loads of small diameter wood with the combustor in the operating position without catalyst light off occurring	Burn dry seasoned wood. Follow instructions in the manual for a proper catalyst light-off, and ensure catalyst light-off as occurred before closing bypass damper. It may be possible to burn the soot or creosote off by building a hot fire, and allowing the stove to run until the catalysts are well within the operating range before closing the bypass. Continue to run the stove at a high temperature for one hour, while ensuring the catalysts stay in the upper operating range, but not too hot.
WARPING OR BOWING OF THE CATALYSTS	Excessive catalyst temperatures for long periods of time.	Ensure that the catalysts remain in the operating zone, and does not get to hot. Reduce air control settings for a lower burn rate to ensure catalyst temperatures do not exceed the operating range.

REPLACEMENT PARTS & OPTIONAL ACCESSORIES

PART #	DESCRIPTION
	REPLACEMENT PARTS
5640-002	BOTTOM HEAT SHIELD
5640-008	HINGE PIN
5640-009	HINGE BLOCK
5640-010	SECONDARY AIR RISER ASSEMBLY
5640-012	TIE ROD
5640-016	BAFFLE GUARD
5640-018	BYPASS ROD RETAINER
5640-020	LATCH STRIKER PLATE
5640-022	DOOR LATCH
5640-024	REAR SHIELD (INCLUDED)
7200-520	CATALYST THERMOMETER
	REPLACEMENT KITS AND ACCESSORIES
96-53400	OUTSIDE AIR KIT
96-58400	GASKET KIT
96-58405	GLASS KIT
96-71400	HANDLE KIT
96-73400	FRONT DOOR LATCH KIT
96-75400	CATALYST REPLACEMENT KIT
96-76400	BAFFLE KIT
96-57400	BLOWER KIT

Refer to the Illustrated Parts list for further detail about stove components, available online at www.hearthstonestoves.com.

SAFETY LABEL

CONTACT YOUR LOCAL BUILDING OFFICIALS ABOUT
RESTRICTIONS AND INSTALLATION INSPECTION IN YOUR AREA

Listed Room Heater, Solid Fuel Type
Also Suitable for Mobile Home Installation Pursuant to (UM)84-HUD

Conforms to UL STD 1482
Certified to ULC STD S627

Manufactured by:
LOGO.PNG
317 Stafford Ave.
Morrisville, VT 05661

MODEL NAME:
GREEN MOUNTAIN 40
MODEL NUMBER: 8640
SERIAL NUMBER:
[redacted]

CAUTION: HOT WHILE IN OPERATION. DO NOT TOUCH. KEEP CHILDREN, CLOTHING, AND FURNITURE AWAY. CONTACT MAY CAUSE SKIN BURNS. SEE NAMEPLATE AND INSTRUCTIONS. INSPECT AND CLEAN CHIMNEY AND CONNECTOR FREQUENTLY. UNDER CERTAIN CONDITIONS OF USE, CREOSOTE BUILDUP MAY OCCUR RAPIDLY.

WARNINGS

Do not use grate or elevate fire. Build wood fire directly on hearth. Do not overfire. If the heater or chimney connector glows, you are overfiring. (See Operator's Manual)

OPERATE ONLY WITH DOORS CLOSED. DO NOT OBSTRUCT SPACE UNDER HEATER.
TYPE OF FUEL: CORD WOOD ONLY - BURNING FUELS OTHER THAN CORDWOOD MAY DAMAGE THE APPLIANCE

"PREVENT HOUSE FIRES"

Install and use only in accordance with manufacturer's installation instructions and your local building codes.

CAUTION: Special methods are required when passing chimney through a wall or ceiling, refer to local building codes. Do not connect this unit to a chimney flue serving another appliance.

NOTE: Replace glass only with 4mm ceramic glass.

This wood heater needs periodic inspection and repair for proper operation. Consult the owner's manual for further information.
It is against federal regulations to operate this wood heater in a manner inconsistent with the operating instructions in the owner's manual.

WARNING: (Mobile Home) An outside air inlet must be provided for combustion and be unrestricted while the unit is in use.

THIS APPLIANCE USES A CATALYTIC COMBUSTOR (P/N WP-4150001076)
The performance of the catalytic device or its durability has not been evaluated as part of the certification
CAUTION: Burning materials other than the specified fuels may make the catalyst inactive

Minimum Clearance to Combustible Materials*

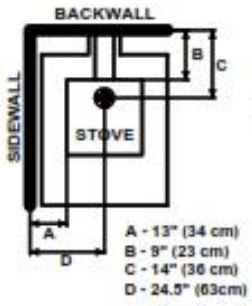

A - 13" (34 cm)
B - 9" (23 cm)
C - 14" (36 cm)
D - 24.5" (63cm)

Floor Protection*

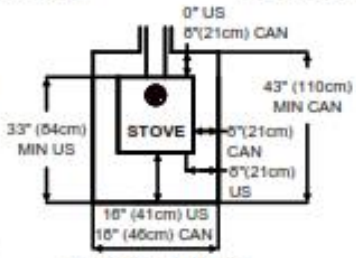

When installed on a combustible floor, non-combustible floor protection is required to cover the area beneath the heater, and extend at least 16"(41cm) [18" (46cm) CAN] to the front and 6"(21cm) beyond each side of the fuel loading and ash removal openings [side of stove in CAN], the floor protection must extend under the flue connector and extend 2" beyond each side of pipe.

VENT REQUIREMENTS: 6" diameter, single wall, minimum 24 MSG blue steel connector with listed factory-built Type HT chimney or masonry chimney.

OPTIONAL COMPONENTS:
Outside Air Kit Part # 96-53400
Blower Kit Part # 96-57400

*Refer to the installation Manual for additional clearance information, installation instructions, and operating instructions.

U.S. ENVIRONMENTAL PROTECTION AGENCY
Particulate Emissions: 1.07 g/hr. Tested to: EPA Method 28R
Certified to comply with 2020 crib wood particulate emission standards.

Date of Manufacture

DO NOT REMOVE OR COVER THIS LABEL MADE IN USA 3389-750

LIMITED WARRANTY

These warranties give you specific legal rights. You may also have other rights, which vary from State to State.

Hearthstone Quality Home Heating Products, Inc. (Hearthstone) warrants to the original retail purchaser only (the "Original Purchaser") the new appliance manufactured by Hearthstone, purchased by the Original Purchaser and installed by an authorized Hearthstone dealer or their designated representative against any of the occurrences listed in this document that result from defects in material or workmanship. This warranty is not transferrable. All obligations of Hearthstone under this document commence on the date of the Original Invoice (the "Purchase Date"). The term "Limited Lifetime" is defined as 10 years from the beginning of warranty coverage.
Hearthstone appliances are designed to be operated only with the fuels listed in your owner's manual.

Catalytic combustor LIMITED LIFETIME WARRANTY: The catalytic combustors are covered directly by the combustor manufacturer, Applied Ceramics. Included with your stove you will find the LIMITED LIFETIME WARRANTY for the catalysts, as well as a warranty card.

Catalyst Model Number: ACI-6M2 Catalyst Manufacturer: APPLIED CERAMICS

APPLIED CERAMICS warrants to the consumer who purchases a FIRECAT STEEL COMBUSTOR as a component in an EPA certified solid fuel appliance, to replace at no charge to the consumer the FIRECAT STEEL COMBUSTOR that ceases to function with two (2) years from the date of purchase by the original consumer, provided that the following conditions are met:

(1) A copy of the original bill of sale that includes place and date of purchase must be submitted with the warranty claim.
(2) The original FIRECAT STEEL COMBUSTOR must be returned to APPLIED CERAMICS
(3) The FIRECAT STEEL COMBUSTOR must not have been mechanically abused, nor must the wrong fuels have been used in the appliance.

If after two years the FIRECAT STEEL COMBUSTOR fails to function, the prorated warranty will allow replacement at the following special price schedule:

Year 3	$130.00
Year 4	$140.00
Year 5	$150.00
Year 6	$160.00
Year 7	and after at current retail price

Conditions 1, 2, and 3 also apply to the Prorated portion of the warranty. Any EPA certified solid fuel appliance will receive one replacement catalyst for each defective catalyst returned during the three year period. The consumer will be responsible for any removal, any servicing, and return of any items required for filing the warranty claim. This warranty is APPLIED CERAMIC'S exclusive warranty, and APPLIED CERAMICS, disclaims any other express or implied warranty for the FIRECAT STEEL COMBUSTOR, including any warranty or merchantability fitness for a particular use.

Ensure the catalyst is well wrapped and padded for shipment in bubble wrap, or similar material. Ship the catalyst with padding inside of a cardboard box.

All warranty claims must include $12.50 for postage and handling within the continental U.S. Alaska and Canada claims must include $35.00.

Please allow 2-3 weeks for delivery. Order online @ www.firecatcombustors.com

Please read and understand the full warranty. Please return the completed warranty card promptly to Applied Ceramics. The warranty card, and any warranty claims can be shipped to:
Applied Ceramics
55555 Pleasantdale Road
Doraville, GA, 30340

Stove components Limited Warranty

Warranty Period	Wood	Gas	Pellet	Covered Components
Limited Lifetime	X	X	X	Stone
	X	X	X	Cast iron not listed elsewhere
	X			Clean burning air supply system*
5 Year	X	X	X	Door handles and latches
	X	X	X	Steel Components and Firebox
		X		Burner and logs
3 Year			X	Burn Pot and Baffles
2 Year	X	X	X	Appliance Electrical and Gas Components
	X	X		Refractory, Vermiculite Panels, Baffles
1 Year	X	X	X	Enamel finish against peeling or fading
	X	X	X	Accessories
	X	X	X	Glass
	X			Ash Grate
	X	X	X	All components not listed elsewhere

Any parts repaired or replaced during the limited warranty period will be warranted under the terms of the limited warranty for a period not to exceed the remaining term of the original limited warranty or one year, whichever is longer.
Parts: Hearthstone will replace through an authorized dealer, defective parts covered by the foregoing warranty at no charge.
Labor: Within the first (1st) year after the Purchase Date, Hearthstone will pay for warranty labor performed by an authorized Dealer at Hearthstone's published labor rates in effect at the time the labor is performed only if the appliance is installed by an authorized dealer or their designated representative. Otherwise or thereafter, the Original Purchaser is responsible for the cost of labor.
Shipping cost for parts: Within the first ninety (90) days after the Purchase Date, Hearthstone will pay for the shipping of appliance parts covered by any of the foregoing warranties to and from Hearthstone or an authorized Dealer, as the case may be. Thereafter, the Original Purchaser is responsible for all shipping costs related to shipping appliance parts to and from Hearthstone or an authorized Dealer, as the case may be.
Shipping cost for the appliance: Within the first (1st) year after the Purchase Date, if the Original Purchaser is instructed to return the appliance to Hearthstone or an authorized Dealer for repair, Hearthstone will pay fifty percent (50%) and the Original Purchaser will pay fifty percent (50%) of the shipping costs related to shipping the appliance to and from Hearthstone or an authorized Dealer, as the case may be. Thereafter, the Original Purchaser is responsible for one hundred percent (100%) of all of the shipping costs related to shipping the appliance to and from Hearthstone or an authorized Dealer, as the case may be. Notwithstanding any other provision of this document, in no event will Hearthstone pay for any Dealer fees or other fees for pick up or delivery of the appliance returned for repair; the Original Purchaser shall be responsible for any such fees.

EXCLUSIONS & CONDITIONS
The warranties contained in this document do not cover, nor is Hearthstone responsible for:

1. Damages resulting from:
    a. Failure to install, operate, or maintain the appliance in accordance with the owner's manual, operating instructions, installation instructions, or safety rating label provided with the appliance.
    b. Over-firing the appliance. Over-firing can be identified by, but not limited to, warped cast iron or steel, rust colored cast iron, bubbling, cracking and discoloration of steel or enamel finishes.
    c. Failure to install the appliance in accordance with all national or local building codes.
    d. Shipping or improper handling.
    e. Improper operation, abuse, misuse, continued operation with damaged, corroded, or failed components, accident, or improper/incorrect service or repairs.
    f. Environmental conditions, inadequate ventilation, negative pressure, or improper drafting caused by tightly sealed constructions, insufficient make-up air supply, or air handling devices such as exhaust fans, forced air furnaces, or other such causes.
    g. Damage caused by direct exposure to water.
    h. Use of fuels other than those specified in the owner's manual.
    I. Installation or use of components not supplied with the appliance, or any other components not expressly authorized and approved by Hearthstone.
    J. Modifications of the appliance not expressly authorized and approved by Hearthstone in writing
    K. Interruptions or fluctuations of electrical power supplied to the appliance.
2. All stones are warranted against cracking or breakage due to thermal stress, excluding surface and hairline cracks and scratches that do not affect the operation, or safety of the appliance.
3. Repair or replacement of wear parts. Such parts that are subject to normal wear and tear during the warranty period such as paint, gaskets, baffles, refractory materials, ash grates, and glass.
4. Damage resulting from installation, modification, alteration, repair or service of the appliance by any party other than an authorized Hearthstone dealer (a "Dealer") or their designated representative, or Hearthstone.
5. Damage due to water or condensation due to installation of the appliance in a high moisture area.
6. Damage due to installation of the appliance in an atmosphere contaminated by damaging chemicals, including but not limited to chlorine, fluorine or salts.
7. Scratches on glass, enameled surfaces or stones due to mechanical abrasion.
8. Noise caused by expansion or contraction caused by the heating and cooling of the appliance.
9. Odors caused by the heating of the appliance, or surrounding materials
10. Consequential damage caused by leaking of condensate during startup
11. A defect in any part of the appliance if the Original Purchaser fails to comply with Hearthstone's or a Dealer's request to ship the part or the appliance to Hearthstone or a Dealer, as the case may be.
12. Replacement stones and enameled parts are taken from current stock, and may not match originals in color, grain, or pattern. Hearthstone will supply replacement parts for discontinued parts in finishes or colors as available, or at their discretion.
13. Hearthstone's obligation under this warranty does not extend to the appliance's ability to heat the desired space. Information is provided to assist the customer and the dealer in selecting the appropriate appliance for the application. Consideration must be given to appliance location and configuration, environmental conditions, insulation and air tightness of the structure.

THE WARRANTIES CONTAINED IN THIS DOCUMENT ARE EXCLUSIVE AND ARE GIVEN BY HEARTHSTONE AND ACCEPTED BY THE ORIGINAL PURCHASER IN LIEU OF ALL OTHER EXPRESS WARRANTIES AND ANY OBLIGATIONS, LIABILITIES, RIGHTS, CLAIMS, OR REMEDIES IN CONTRACT OR TORT, WHETHER OR NOT ARISING FROM HEARTHSTONE'S NEGLIGENCE, ACTUAL OR IMPUTED. ALL IMPLIED WARRANTIES, INCLUDING THE WARRANTIES OF MERCHANTABILITY AND FITNESS FOR A PARTICULAR PURPOSE, ARE GIVEN ONLY TO THE EXTENT REQUIRED BY FEDERAL OR STATE LAW. EXCEPT AS OTHERWISE REQUIRED BY STATE LAW, UPON THE EXPIRATION OF THE EXPRESS LIMITED WARRANTIES CONTAINED HEREIN, NO IMPLIED WARRANTIES, INCLUDING THE IMPLIED WARRANTIES OF MERCHANTABILITY OR FITNESS FOR A PARTICULAR PURPOSE, SHALL APPLY TO THE SUBJECT APPLIANCE. SOME STATES DO NOT ALLOW LIMITATIONS ON HOW LONG AN IMPLIED WARRANTY LASTS, SO THE ABOVE LIMITATION MAY NOT APPLY TO YOU.

THE WARRANTIES CONTAINED IN THIS DOCUMENT EXTEND ONLY TO THE ORIGINAL PURCHASER OF THE APPLIANCE WARRANTED HEREUNDER. THEY ARE NOT TRANSFERRABLE AND DO NOT EXTEND TO ANY SUBSEQUENT OWNERS.

UNDER NO CIRCUMSTANCES SHALL HEARTHSTONE BE LIABLE TO THE ORIGINAL PURCHASER OR ANY OTHER PERSON FOR ANY INCIDENTAL OR CONSEQUENTIAL DAMAGES, INCLUDING BUT NOT LIMITED TO DAMAGE TO PROPERTY OR PERSONAL INJURIES, WHETHER ARISING OUT OF LOSS OF USE, BREACH OF WARRANTY, TORT, OR OTHERWISE, EVEN IF HEARTHSTONE HAS BEEN APPRAISED OF THE POSSIBILITY OF SUCH DAMAGES. SOME STATES DO NOT ALLOW THE EXCLUSION OR LIMITATION OF INCIDENTAL OR CONSEQUENTIAL DAMAGES, SO THE ABOVE LIMITATION OR EXCLUSION MAY NOT APPLY TO YOU.

QUALIFYING FOR WARRANTY COVERAGE

To obtain performance of any obligation under this document, the Original Purchaser must, within the applicable warranty time period, contact their original Hearthstone dealer, or the current responsible local Hearthstone dealer, for instructions regarding the return of defective parts for repair, the return of the appliance for repair, or to schedule a Dealer service call. The Original Purchaser should refer to the Dealer Network search engine contained on Hearthstone's Web site (www.hearthstonestoves.com) if the original dealer is not available, to find a Hearthstone dealer nearest to the Original Purchaser's location.

REMEDY

The remedy for any breach of the foregoing warranties will consist of repair or replacement, at Hearthstone's option, of any covered defect in the appliance. When the Original Purchaser contacts a Hearthstone Dealer, the Dealer on behalf of Hearthstone, as the case may be, will instruct the Original Purchaser to either return the defective part, or the entire appliance (if requested), to the Dealer or Hearthstone or allow a Dealer to make a service call at the place where the appliance is located. Hearthstone may require that a digital picture be provided to support the claim. Notwithstanding any other provision of this document, the Original Purchaser shall pay for any fees and service charges related to a Dealer's service call or the shipping charges associated with the return.

WARRANTY REGISTRATION

The Original Purchaser can complete their warranty registration on our website at www.hearthstonestoves.com, or send a completed and signed Warranty Registration Form, which is enclosed in the appliance document packet, to the following address:

Hearthstone Quality Home Heating Products, Inc.
Warranty Department
317 Stafford Avenue
Morrisville, VT 05661

NOTE: SENDING IN THE SIGNED WARRANTY REGISTRATION FORM IS *NOT REQUIRED* AS A CONDITION OF WARRANTY COVERAGE OR HEARTHSTONE'S PERFORMANCE.

CONTACT YOUR LOCAL BUILDING OFFICIALS ABOUT RESTRICTIONS AND INSTALLATION INSPECTION IN YOUR AREA

Listed Room Heater, Solid Fuel Type
Also Suitable for Mobile Home Installation Pursuant to (UM)84-HUD

8pfs-cu copy.png

Conforms to UL STD 1482
Certified to ULC STD S627

Manufactured by:
LOGO.PNG
317 Stafford Ave.
Morrisville, VT 05661

MODEL NAME: **GREEN MOUNTAIN 40**
MODEL NUMBER: **8640**
SERIAL NUMBER: [redacted]

CAUTION: HOT WHILE IN OPERATION. DO NOT TOUCH. KEEP CHILDREN, CLOTHING, AND FURNITURE AWAY. CONTACT MAY CAUSE SKIN BURNS. SEE NAMEPLATE AND INSTRUCTIONS. INSPECT AND CLEAN CHIMNEY AND CONNECTOR FREQUENTLY. UNDER CERTAIN CONDITIONS OF USE, CREOSOTE BUILDUP MAY OCCUR RAPIDLY.

WARNINGS

Do not use grate or elevate fire. Build wood fire directly on hearth. Do not overfire. If the heater or chimney connector glows, you are overfiring. (See Operator's Manual)

OPERATE ONLY WITH DOORS CLOSED. DO NOT OBSTRUCT SPACE UNDER HEATER.
TYPE OF FUEL: CORD WOOD ONLY - BURNING FUELS OTHER THAN CORDWOOD MAY DAMAGE THE APPLIANCE

"PREVENT HOUSE FIRES"

Install and use only in accordance with manufacturer's installation instructions and your local building codes.

CAUTION: Special methods are required when passing chimney through a wall or ceiling, refer to local building codes. Do not connect this unit to a chimney flue serving another appliance.

NOTE: Replace glass only with 4mm ceramic glass.

This wood heater needs periodic inspection and repair for proper operation. Consult the owner's manual for further information. It is against federal regulations to operate this wood heater in a manner inconsistent with the operating instructions in the owner's manual.

WARNING: (Mobile Home) An outside air inlet must be provided for combustion and be unrestricted while the unit is in use.

THIS APPLIANCE USES A CATALYTIC COMBUSTOR (P/N WF-4150001076)
The performance of the catalytic device or its durability has not been evaluated as part of the certification
CAUTION: Burning materials other than the specified fuels may make the catalyst inactive

Minimum Clearance to Combustible Materials*

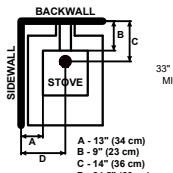

A - 13" (34 cm)
B - 9" (23 cm)
C - 14" (36 cm)
D - 24.5" (63cm)

Floor Protection*

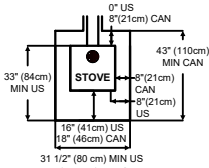

When installed on a combustible floor, non-combustible floor protection is required to cover the area beneath the heater, and extend at least 16"(41cm) [18" (46cm) CAN] to the front and 8"(21cm) beyond each side of the fuel loading and ash removal openings [side of stove in CAN], the floor protection must extend under the flue connector and extend 2" beyond each side of pipe.

VENT REQUIREMENTS: 6" diameter, single wall, minimum 24 MSG blue steel connector with listed factory-built Type HT chimney or masonry chimney.

OPTIONAL COMPONENTS:
Outside Air Kit **Part # 96-53400**
Blower Kit **Part # 96-57400**

***Refer to the installation Manual for additional clearance information, installation instructions, and operating instructions.**

U.S. ENVIRONMENTAL PROTECTION AGENCY
Particulate Emissions: 1.07 g/hr. Tested to: EPA Method 28R
Certified to comply with 2020 crib wood particulate emission standards.

Date of Manufacture

2017	2018	2019	2020	JAN	FEB	MAR	APR	MAY	JUN	JUL	AUG	SEP	OCT	NOV	DEC
■		■	■	■	■	■	■	■	■	■	■	■	■	■	■

DO NOT REMOVE OR COVER THIS LABEL **MADE IN USA** **3300-750**

CONTACTEZ LES AUTORITÉS RESTRICTIONS ET L'INSPECTION LOCALES DES VOTRE INSTALLATION

Poêle à bois recommandé pour chauffage de pièce, utilisant un combustible solide
Convient aussi pour maisons mobiles conformes à la norme (UM)84 HUD

8pfs-cu copy.png

Conforme à UL STD 1482
Certifié selon ULC STD S627

Fabrique par:
LOGO.PNG
317 Stafford Ave.
Morrisville, VT 05661

NOM DU MODELE: GREEN MOUNTAIN 40
NUMÉRO DE MODÈLE: 8640
NUMÉRO DO SÉRIE: [redacted]

ATTENTION: CHAUD QUAND IL EST EN MARCHE. NE PAS TOUCHER. TENIR LES ENFANTS, LES VETEMENTS ET MEUBLES ÉLOIGNÉS. LE CONTACT PEUT CAUSER DES BRULURES. VOIR LA PLAQUE SIGNALÉTIGUE ET INSTRUCTIONS. INSPECTER ET NETTOYER FRÉQUEMMENT LA CHEMINÉE ET LE CONDUIT DE RACCORDEMENT. DANS CERTAINES CONDITIONS D'UTILISATION, LE CRÉOSOTE PEUT SE FORMER RAPIDEMENT.

ADVERTISSEMENTS

N'utilisez pas de grille surelevée pour alimenter le feu. Faites le feu directement dans l'âtre. Ne surchauffez pas le poêle. Si le poêle ou la cheminée devient rouge, vous surchauffez. (Voir le manuel de l'opérattieur)

UTILISER SEULEMENT LES PORTES CLOSES. NE PAS OBSTRUER L'ESPACE SOUS LE POÊLE.
COMBUSTIBLE: BÛCHES DE BOIS SEULEMENT - LES COMBUSTIBLES ARTIFICIELS AUTRES QUE CORDWOOD PEUVENT ENDOMMAGER L'APPAREIL

"PRÉVENTION DES INCENDIES"

Installer et utiliser seulement en accord avec les instructions d'installation du manufacturierer les codes locaux du bâtiment.

ATTENTION: Des méthodes spécifiques sont nécessaires pour faire passer la cheminée à travers un mur ou un toit. Référer aux codes locaux du bâtiment. Ne pas brancher cette unité à un conduit de cheminée desservant déjà un autre appareil.

NOTE: Remplacer la vitre seulement avec une vitre de CÉRAMIQUE de 4 mm.

Ce chauffe-bois nécessite une inspection et des réparations périodiques pour un bon fonctionnement. Consultez le manuel du propriétaire pour plus d'informations. Il est contraire aux règlements fédéraux d'utilisation ce chauffeur-bois d'une manière incompatible avec les instructions d'utilisation du manuel du propriétaire.

AVERTISSEMENT (MAISON MOBILE): Une prise d'air extérieur est nécessaire à la combustion et doit être effective sans restriction pendant que l'unité fonctionne.

CET APPAREIL UTILISE UN COMBUSTE CATALYTIQUE (Part # WF-4150001076)
La performance du dispositif catalytique ou sa durabilité n'a pas été évaluée dans le cadre de la certification
ATTENTION: les matériaux brûlants autres que les carburants spécifiés peuvent rendre le catalyseur inactif

Dégagements minimum aux matériaux combustibles*

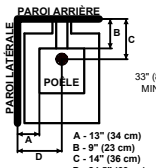

A - 13" (34 cm)
B - 9" (23 cm)
C - 14" (36 cm)
D - 24.5" (63cm)

Protection du sol*

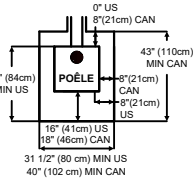

Quand le poêle est installé sur un plancher combustible, une protection de plancher non combustible doit être installée pour couvrir la surface sous la poêle. Elle doit dépasser d'au moins 16"(41cm) [18"(46cm) CAN] le devant du poêle, et 8" (21cm) au-delà du dos et des côtés du poêle [côté du poêle en CAN], et déborder de 2" (5 cm) de chaque côté du tuyau de raccordement de la cheminée.

PIÈCES DE VENTILATION REQUISES:
Diamètre de 6" (15,2 cm), tuyau simple, minimum 24 MSG, tuyau de raccord en acier noir pour cheminée homologuée préfabriquée de type HT ou pour cheminée de maçonnerie.

COMPOSANTES OPTIONNELLES:
Prise d'air extérieur **Part # 96-53400**
Soufflerie **Part # 96-57400**

*** Référer au Manuel**

AGENCE AMÉRICAINE DE PROTECTION DE L'ENVIRONNEMENT
D'emissions des particulates: 1,07 g/hr. Testé à: Méthode EPA 28R
Certifié pour se conformer aux normes d'émission de particules de bois structuré 2020

NE PAS ENLEVER OU NE PAS COUVRIR CETTE ÉTIQUETTE **FABRIQUÉ AUX ÉTATS-UNIS** **3300-750**

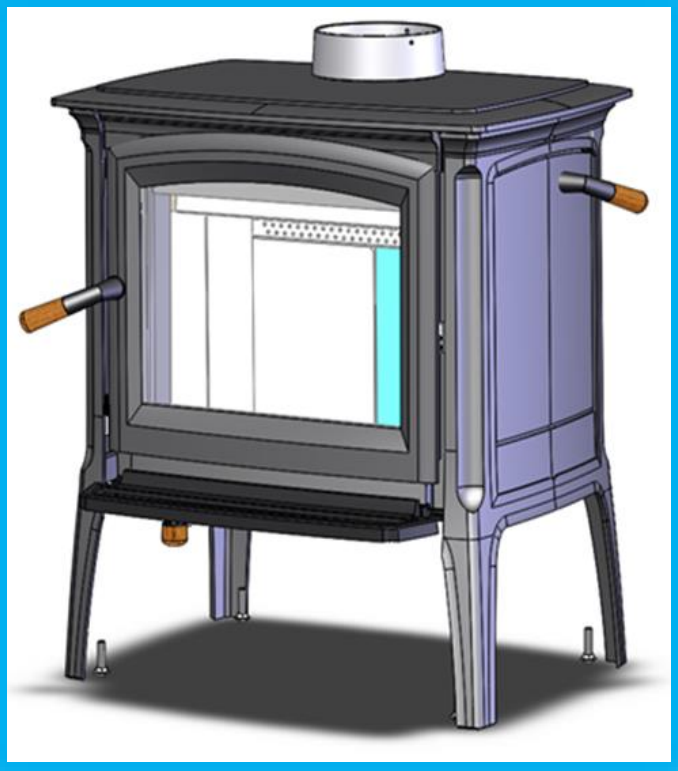

Craftsbury

(Model 8392)

Woodstove

OWNER'S MANUAL

Installation And Operating Instructions

We recommend that our products be installed and serviced by professionals who are certified in the U.S. by NFI (National Fireplace Institute).
www.nficertified.org

SAVE THIS OWNER'S MANUAL
FOR FUTURE REFERENCE

PLEASE READ THIS ENTIRE OWNER'S MANUAL BEFORE YOU INSTALL AND USE YOUR NEW CRAFTSBURY WOOD STOVE.

If this room heater is not properly installed, a house fire may result.
To reduce the risk of fire, follow the installation instructions.
Failure to follow these instructions can result in property damage, bodily injury, or even death.
Conforms to UL Std. 1482
Certified to ULC Std. S627

CONTACT LOCAL AUTHORITIES WITH JURISDICTION (BUILDING DEPARTMENT or FIRE OFFICIALS), ABOUT PERMITS REQUIRED, RESTRICTIONS AND INSTALLATION INSPECTION IN YOUR AREA.

California Prop 65

⚠ WARNING: This product can expose you to chemicals including glass wool fiber and carbon monoxide which are known to the State of California to cause cancer, birth defects or other reproductive harm. For more information go to www.P65Warnings.ca.gov

Notes on Stove Operation and Efficiency

Rating:

You have purchased a Hearthstone Craftsbury tested to EPA Method 28R 40 CFR Part 60 where applicable. This stove is certified to comply with the U.S. Environmental Protection Agency 2020 particulate emissions standard using crib wood. It is certified at 1.07 gr/hr. emission rate and under specific test conditions has been shown to deliver heat at rates ranging from 13,900 to 31,600 Btu (output).

This wood heater has a manufacturer-set minimum allowable low burn rate that must not be altered. It is against federal regulations to alter this setting or otherwise operate this wood heater in a manner inconsistent with operating instructions in this manual.

Please refer to the Warranty section of this manual for registration instructions. In case of warranty claims, please contact the point of original sale or the nearest authorized Hearthstone dealer. Our dealer network processes all warranty claims. Authorized Hearthstone dealers can be located at www.hearthstonestoves.com.

This heater is designed to burn natural wood only. Higher efficiencies and lower emissions generally result when burning air-dried seasoned hardwoods, as compared to softwoods or to green or freshly cut hardwoods. **DO NOT BURN:** *Garbage, lawn clippings, material containing rubber (including tires), materials containing plastic, waste petroleum products paints or paint thinners, asphalt products, materials containing asbestos, construction or demolition debris, railroad ties, pressure treated wood, manure or animal remains, salt water driftwood or other previously salt water saturated materials, unseasoned wood, paper products, cardboard, plywood or particleboard.* This prohibition against burning these materials does not prohibit the use of fire starters made from paper, cardboard, sawdust, wax and similar substances for the purpose of starting a fire in an affected wood heater. Burning these materials may result in a release toxic fumes or render the heater ineffective and cause smoke.

Following the maintenance guidelines set forth in this manual will help insure the efficient use of your wood heater and minimize visible emissions. Having your stove inspected by a trained professional on a regular basis will greatly increase the potential for recognizing potential impacts to efficiency.

Proper draft is important to the efficient operation of your heater. Refer to the Normal Operation section of this manual for information regarding adequate draft. Both excessive and sub-minimum draft can affect the efficiency of your wood heater. Excessive draft can lead to over-consumption of fuel, lower overall heating capacity of the stove and potential over firing. Low draft can result in inefficient burns, low heat output, expulsion of smoke into the living area when stove doors are opened and an increased potential for build-up of flammable materials in the flue.

Efficiency:

Efficiency was measured and weighted using EPA Method 28R and CSA B415-10 methodology. A weighted average was used to calculate the overall efficiency across all of the 4 burn rate categories using the higher heating value (HHV). The weighted average efficiency is 79% (HHV).

To maximize the efficiency of your wood stove make sure it is sized properly for the space you plan to heat. An oversized stove will often be forced to burn at a lower and dirtier burn rate. Consult with your dealer for sizing and correctly placing the stove in your home. An incorrectly placed stove can greatly reduce efficiency. Maximizing the efficiency of your stove will heat your house quickly, burn cleaner and use less wood.

Refer to the Choosing Firewood section of this manual for appropriate fuel selection. Seasoned firewood is typically at or near 20% moisture content. This can be measured with any number of hand-held moisture meters available through your local hearth shop. Follow instructions included in the meter you purchase to measure fuel wood moisture content. Burn only dry, seasoned wood as using wet wood will greatly reduce your efficiency.

CO Emissions:

The Craftsbury has the following CO emission rates by burn level: Category 1 (low) –40.7 g/hr., Category 2 (med. low) – 16.3 g/hr., Category 3 (med. high) – 8.6 g/hr. and Category 4 – 60.0 g/hr. Wet wood or unapproved fuel described above can greatly affect the emissions of a wood burning stove.

Smoke/Fire/CO Detectors:

It is highly recommended that smoke and CO detectors be installed throughout the heated space when a wood burning heater is installed. Be certain to install these devices not only in the area where the wood appliance is located, but also in bedrooms, hallways leading to other areas of the house and all common areas of the heated space. Check the batteries in these devices and assure operation by performing whatever test operations are recommended by the manufacturer.

TABLE OF CONTENTS

INTRODUCTION 4

CODES 5
SAFETY INFORMATION 5
PERIODIC CHECKLIST 6
EMERGENCY PROCEDURES 6

SPECIFICATIONS 7

INSTALLATION 8

UNPACKING 8
PACK LIST 8
INSTALLING YOUR STOVE 8
HEARTH REQUIREMENTS & FLOOR PROTECTION 9
COMBUSTIBLE SURFACE REQUIRED CLEARANCES 10
CHIMNEY CONNECTOR SYSTEMS AND CLEARANCES FROM COMBUSTIBLE WALLS 12
OUTSIDE AIR SUPPLY 13
VENTING COMPONENTS & CONFIGURATION REQUIREMENTS 14
INSTALLING IN A MOBILE HOME 18

OPERATION 19

CONTROLS AND FEATURES 20
BUILDING A FIRE 22
BREAKING IN YOUR WOOD STOVE 23
NORMAL OPERATION 23
CATALYTIC COMBUSTOR OPERATION 24

MAINTENANCE 26

CATALYTIC COMBUSTOR INSPECTION AND REPLACEMENT PROCEDURES 26
INSPECTING THE CATALYSTS 26
REPLACING THE CATALYSTS 27
REPLACING THE BAFFLE 26
REPLACING THE REFRACTORY STONE AND SECONDARY RISER ASSEMBLY 26
GLASS REPLACEMENT PROCEDURES 26
CREOSOTE FORMATION & REMOVAL 29
GASKETS 29
GLASS 29

TROUBLESHOOTING 30

TROUBLESHOOTING GUIDE 31
REPLACEMENT PARTS & OPTIONAL ACCESSORIES 33

SAFETY LABEL 34

WARRANTY 35

INTRODUCTION

Thank you for purchasing a Craftsbury woodstove from Hearthstone Quality Home Heating Products. This stove will provide years of comfortable heat. This stove combines the warmth and comfort of soapstone and cast iron with the efficiency of advanced catalytic technology. The Craftsbury blends modern technology with the unique beauty and qualities of cast iron. We trust that you will appreciate the quality of this handcrafted product.

Your Craftsbury woodstove burns very efficiently, and produces a large amount of heat. However, you should not consider your Craftsbury the primary heat source for your home. The Craftsbury's large glass window allows you to enjoy the fire from a variety of locations in the room.

Please read this manual in its entirety. Its purpose is to familiarize you with your stove's safe installation, proper break-in, operation and maintenance. It contains extremely important information so keep it handy and refer to it often.

A qualified heating technician may need this owner's manual as a reference when installing this stove in your home. There are national, state, and local building codes that direct the technician on how to install your stove. These codes stipulate the dimension of stovepipe and clearances to walls, ceilings, hearth, and other combustible surfaces. The codes exist to reduce the risk of fire. Failure to follow these instructions can result in fire, property damage, bodily injury, and even death.

Install the stove in a safe, open area, away from traffic flow, doors, and hallways. If possible, try to install the stove near an existing chimney and chimney connector. It is extremely important to install this stove with the proper clearance from combustible surfaces. You can purchase specific connector pipe and special wall coverings as specified by this manual and the NFPA 211 code to protect combustible surfaces. As a general rule, keep furniture, drapes, curtains, wood, paper, and other combustibles at least 36 inches (92 cm) away from the stove. Never install the stove in or near a storage location for gasoline, kerosene, charcoal lighter fluid or any other flammable liquids.

Install the stove in your central living area to allow heat to radiate naturally to distant rooms. Do not install your stove in a poorly insulated area. This is inefficient and would likely result in higher fuel usage.

- **SAFETY NOTICE:**

  AN IMPROPERLY INSTALLED STOVE CAN RESULT IN A HOUSE FIRE. FOR YOUR SAFETY, CAREFULLY FOLLOW THE INSTALLATION DIRECTIONS. CONTACT LOCAL BUILDING OR FIRE OFFICIALS ABOUT RESTRICTIONS AND INSTALLATION INSPECTION IN YOUR AREA.

The safety of your stove will depend on many factors, some of which include: distance to combustible objects, correct venting, and adequate chimney maintenance. Should you have any questions, do not hesitate to contact your dealer for additional information.

Contact your dealer for any necessary warranty service.

This Craftsbury Model 8640 stove is warranted by:

Hearthstone ***Quality Home Heating Products, Inc***®
317 Stafford Ave.
Morrisville, Vermont 05661, USA
www.Hearthstonestoves.com

CODES

When you install your Craftsbury woodstove, it is imperative that you adhere to all Federal and local codes. Obtain these codes from either of the following sources:

American National Standards Institute, Inc. (ANSI)
1430 Broadway
New York, NY 10018
www.ansi.org

National Fire Protection Association, Inc. (NFPA)
Battery March Park
Quincy, MA 02269
www.nfpa.org

If you are installing your Craftsbury in a mobile or manufactured home, follow the guidelines described in the Manufactured Home Construction and Safety Standard, Title 24 CFR, Part 3280 (United States).

SAFETY INFORMATION

Read and understand this Owner's Manual thoroughly before installing and using this stove.

Make sure to install your stove:

- According to the manufacturer's recommendations
- In accordance with all applicable codes
- With the proper sized chimney

When using your stove, follow these safety precautions:

- **Never** modify this stove in any way.
- **Never** burn kiln dried, painted or treated wood in this stove.
- **DO NOT BURN GARBAGE. Never** burn garbage or trash, colored or glossy paper, solvents, plywood, artificial logs, cardboard, or driftwood, in this stove.
- **Never** burn coal in this stove.
- **DO NOT BURN FLAMMABLE FLUIDS.**
- **DO NOT USE CHEMICALS OR FLUIDS TO START THE FIRE. Never** use gasoline, kerosene, charcoal lighter fluid, or other flammable fluids to start or invigorate the fire. These fuels will cause dangerous burning conditions in the stove. Keep all such materials away from the stove.
- **Never** use a wood grate or other device to elevate the fire.
- **Never** allow logs in the firebox to hit the glass when the door is closed.
- **Never** slam the door or use the door to force wood in to the stove.
- **Never** over-fire your stove. (See page 25)
- **Never** put articles of clothing or candles on a hot stove.
- **Never** connect the stove to a flue used by another appliance.

Other safety guidelines:

- Keep all combustible items such as furniture, drapes, clothing, and other items, at least 36" (0.92 m) from the stove (See page 9)
- Install a smoke detector, preferably in an area away from your wood stove.
- Keep a fire extinguisher handy. We recommend the type rated "A B C."
- Dispose of ashes properly. (See page 23)
- Keep children and pets away from the stove when it is burning; they could be seriously injured by touching a hot stove.
- Clean your chimney system as needed. (See page 30)
- Outside combustion air may be required if:
  1. This solid-fuel-fired appliance does not draw steadily, smoke rollout occurs, fuel burns poorly, or back-drafts occur whether or not there is combustion present.
  2. Existing fuel-fired equipment in the house, such as fireplaces or other heating appliances, smell, do not operate properly, suffer smoke roll-out when opened, or back-draft whether or not there is combustion present.
  3. Opening a window slightly on a calm (windless) day alleviates any of the above symptoms.
  4. The house is equipped with a well-sealed vapor barrier and tight fitting windows and/or has any powered devices that exhaust house air.
  5. There is excessive condensation on windows in the winter.
  6. A ventilation system is installed in the house.

If these or other indications suggest that infiltration air is inadequate, additional combustion air should be

provided from the outdoors. Outside combustion air can be provided to the appliance by using the optional outside air kit #96-53400

PERIODIC CHECKLIST

Perform each of these tasks at the specified intervals.

At the End of Every Week:

- Empty ashes from the firebox, sooner if the firebox is full.

At the Beginning of Every Other Month:

- Depending upon your use of the stove, visually inspect the chimney connector and chimney for creosote. (see page 30)
- Check door seals using the "dollar bill test." - When the stove is cool, shut the door on a dollar bill. If the bill pulls out without any resistance, then your stove's door is not sealing properly. To tighten the seal, adjust the door latch mechanism or change the door gasket. (Refer to page 30.)
- Inspect the face of the catalytic combustor for fly ash and soot. Use a soft-bristled brush to remove if present. It is recommended to visually inspect the catalytic combustor at least 3 times during the heating season, or every 2-3 months.

At the End of Every Season:

- Dismantle the chimney connector and clean it thoroughly. Replace any pieces that show signs of rust or deterioration.
- Inspect and, if necessary, clean your chimney.
- Clean out the inside of the stove thoroughly.
- Check and clean the catalytic combustor, if necessary
- Inspect all door gasket material and replace if worn, frayed, cracked or extremely hard.

EMERGENCY PROCEDURES

If you have a stovepipe or chimney fire, follow these instructions:

1. If the fire is too threatening, leave the area and call the fire department immediately! If not, perform the next three steps.
2. Close the primary air control.
3. Close the stovepipe damper (if present).
4. Close the bypass damper
5. Keep the stove front door closed!

- **WARNING: DO NOT ATTEMPT TO PUT OUT A STOVEPIPE OR CHIMNEY FIRE BY THROWING WATER ONTO THE STOVE, STOVEPIPE, OR CHIMNEY. THE EXTREMELY HIGH TEMPERATURE OF SUCH FIRES CAN CAUSE INSTANTANEOUS STEAM AND SERIOUS BODILY HARM.**

Once the chimney fire expires, leave the primary air control and bypass handle closed and let the fire in the stove die out completely. Inspect the stove, stovepipe, and chimney thoroughly for any sign of damage before firing the stove again. You must correct any damage before using your stove again.

Establish a routine for the fuel, wood burner and firing technique. Check daily for creosote build-up until experience shows how often you need to clean to be safe. Be aware that the hotter the fire the less creosote is deposited, and weekly cleaning may be necessary in mild weather even though monthly cleaning may be enough in the coldest months. Contact your local municipal or provincial fire authority for information on how to handle a chimney fire. Have a clearly understood plan to handle a chimney fire.

SPECIFICATIONS

Maximum Heat Output:
40,000 BTUs per hour of cordwood (based on independent laboratory test results).

Floor Size of Heated Area:
Up to a maximum of 1,400 square feet. Factors unique to your home can reduce the square footage the stove will heat. Home insulation value, number and efficiency of windows, floor plan, stove placement, quality of the fuel and other conditions may limit the heating ability of the stove.

Firebox Capacity:
1.32 cubic feet.

Maximum Log Length: Up To 16” (40.6cm).

Emissions: 1.07 g/hr.

Burn Time: Up to 16+ hrs. (*Heat Life*™: Up to 20 hours) Note: The amount and weight of wood contained per cubic foot of firebox volume can vary from 10 to 25 lbs. per cubic foot depending on type of wood, moisture content, packing density and other factors.

Stove Dimensions:

Height:	30 3/8” (77.2cm)
Width:	23 1/4" (59.1cm)
Depth:	19 3/8" (49.2cm)
Weight:	464 lbs. (210 kg)

Connector Size:	6" (152 mm) diameter
Metal Chimney:	6" (152 mm) inside diameter
Masonry Chimney:	6” (152 mm) inside diameter (round flue), 8” x 8” (203 x 203 mm) (square flue)

Crate Dimensions: H-40” W-29” L-36” or 102x74x 92cm

Optional Equipment:

Outside Air Kit	96-53400
Blower Kit	96-57400

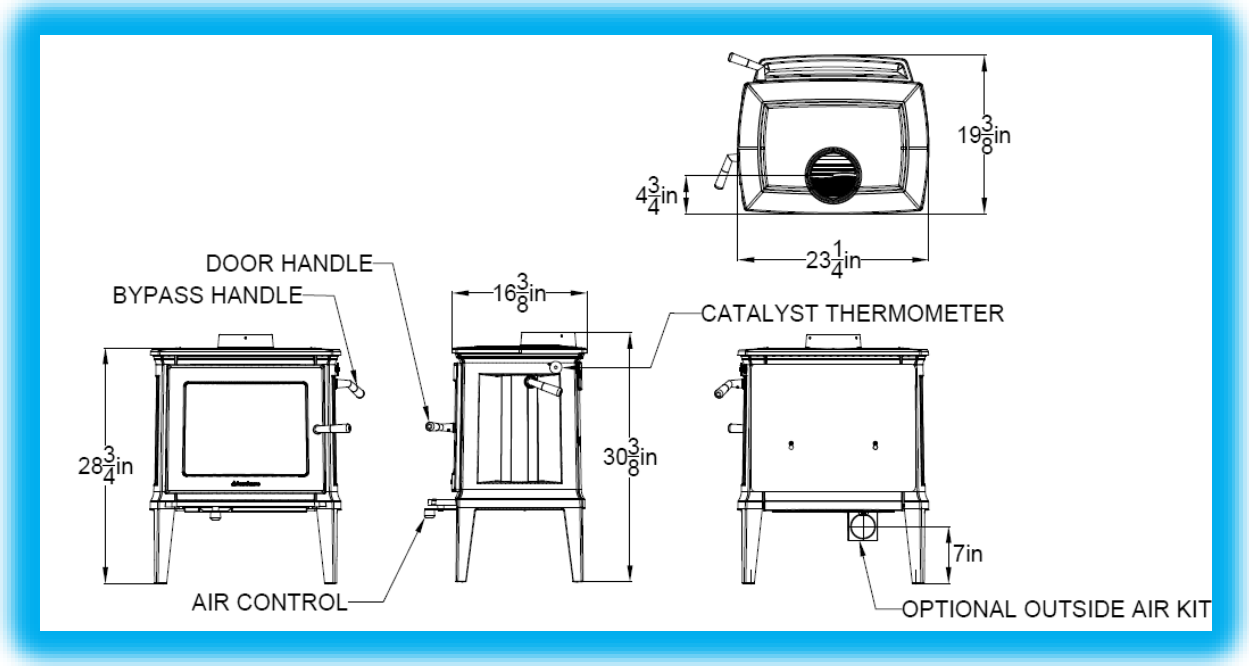

Figure 1 – Craftsbury Dimensions

INSTALLATION

UNPACKING

Hearthstone packages your Craftsbury woodstove with the greatest care so that it ships safely. Under certain circumstances, however, damage may occur during transit and handling. When you receive the Craftsbury, carefully unpack and inspect the stove and all accompanying parts. Ensure that all parts are included inside the stove. If any parts are damaged or missing, please contact your authorized Hearthstone dealer immediately.

Be sure to remove the packaging material in the flue collar and above the baffle before installing the chimney.

PACK LIST

Craftsbury Model 8640 Woodstove
Owner's Manual

The label is attached by a cable to the bottom of the stove. Take care when lifting the stove not to damage the label or cable. After final positioning of the stove, the label may be stored in the holding clip on the bottom shield of the stove.

Figure 2 - Label Location

INSTALLING YOUR STOVE

Choose a place to install your Craftsbury woodstove. Consider the location of your stove for optimum heating efficiency. In general, it is better to place your stove in a main living area, rather than in a basement or other confined space.

Inspect this location to make sure that the stove and stovepipes will have the required clearance from combustible materials that are near the stove. Combustibles include walls, floor, ceiling, and chimney chase. You must carefully consider the clearances to all of these combustibles before actually connecting your stove.

If the floor is made of combustible material, then a non-combustible floor protector is required between the floor and the stove. An example of a non-combustible floor protector is a hearth constructed with a continuous layer of tile, brick, slate, glass or another non-combustible facing. There is no R-value requirement.

If you use a rear connector pipe, ensure it is listed with Underwriter's Laboratories. Check the listing of your pipe with UL for the correct clearances.

The diagrams in this manual represent typical installations, but are specific to the Simpson Dura-Vent DVL brand.

Clearances to NFPA Code 211 Protected Surfaces

You can reduce the clearances to combustible surfaces by using any National Fire Protection Agency (NFPA) approved wall protection system with additional approval of the regulatory authority having jurisdiction in your area. Please refer to NFPA Code 211 for specifications and complete details. You can obtain this information directly from the NFPA.

National Fire Protection Agency
Batterymarch Park
Quincy, MA 02269
1-800-344-3555
1-617-770-3000
www.nfpa.org

HEARTH REQUIREMENTS & FLOOR PROTECTION

Ensure you protect combustible flooring with a covering of noncombustible material. The Craftsbury does not require an insulated hearth pad. The minimum floor protection must be met under the stove and extend beyond the stove as follows:

The minimum floor protection for US installations is 33in x 31-1/2in.
The minimum floor protection for installations in Canada is 43in x 40in.

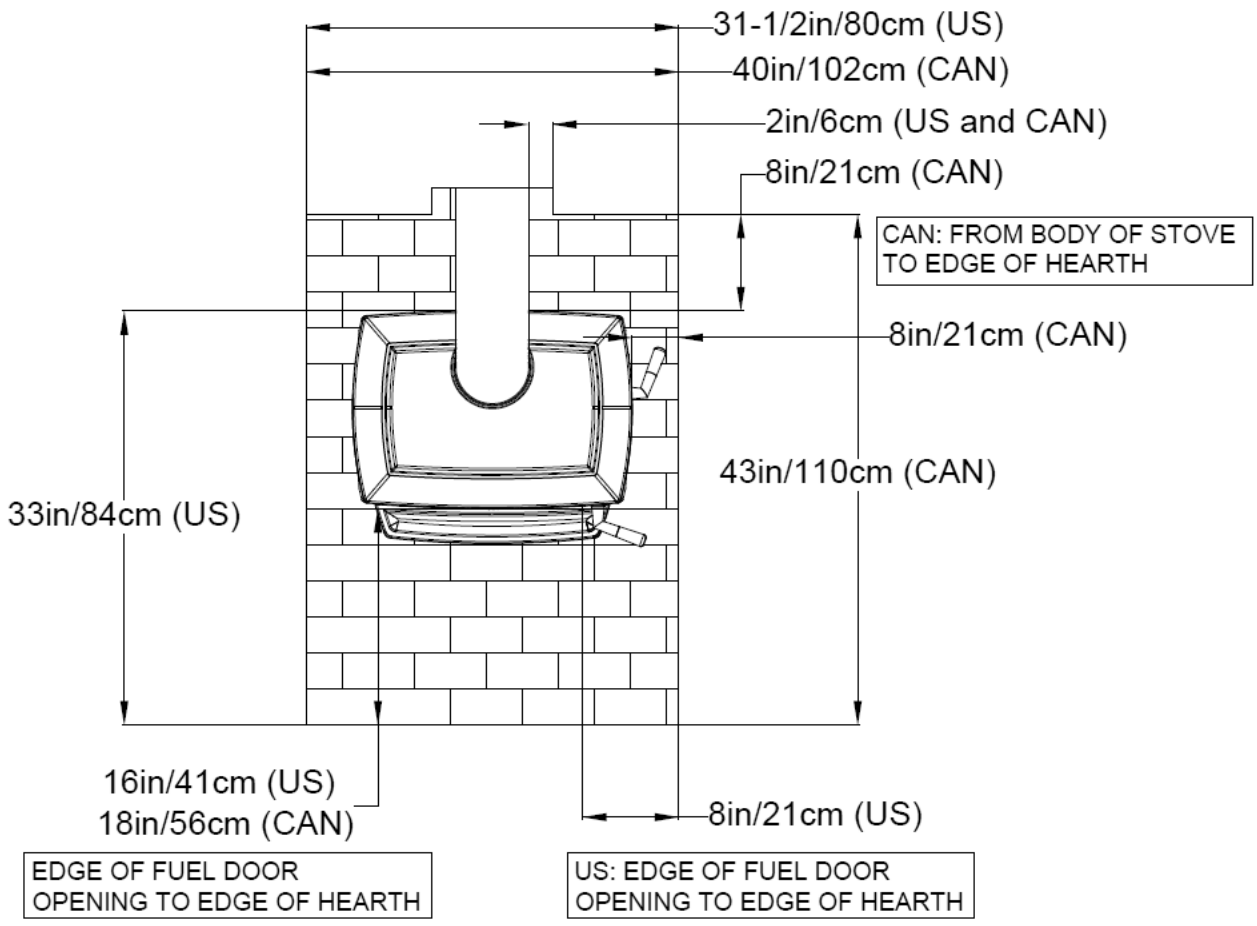

Figure 3 – Hearth Dimensions

COMBUSTIBLE SURFACE REQUIRED CLEARANCES

Note: *Dimensions shown in the following figures are from the body of the stove unless otherwise indicated.*

It is very important to follow minimum clearances for chimney connectors to combustibles such as walls and ceilings when installing the stove near combustible surfaces.

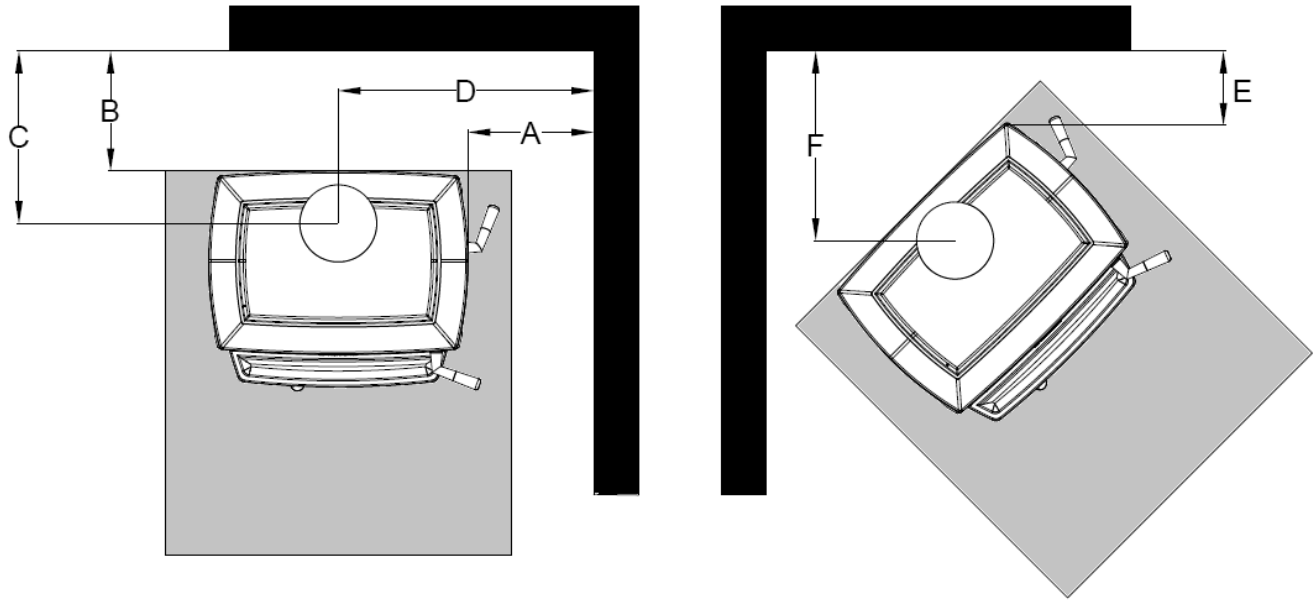

Figure 4 – Clearance to Combustibles

	Parallel				Corner	Corner
Clearances	A	B	C	D	E	F
Single wall Connector – Inc. Rear Heat Shield	13”-33cm	9”-23cm	14”-36cm	24.5”-63cm	6”-16cm	16.5”-42cm
Single Wall Connector – With Blower Kit Shield	13”-33cm	9”-23cm	14”-36cm	24.5”-63cm	6”-16cm	16.5”-42cm
Double Wall Connector – Inc. Rear Heat Shield	13”-33cm	7”-18cm	12”-32cm	24.5”-64cm	6”-16cm	16.5”-42cm
Double Wall Connector – With Blower Kit Shield	13”-33cm	7”-18cm	12”-32cm	24.5”-64cm	6”-16cm	16.5”-42cm
Alcove W/Single Wall Conn – Inc. Rear Heat Shield	13”-33cm	9”-23cm	14”-36cm	24.5”-63cm	6”-16cm	16.5”-42cm
Alcove W/Single Wall Conn – With Blower Kit Shield	13”-33cm	9”-23cm	14”-36cm	24.5”-63cm	6”-16cm	16.5”-42cm
Alcove W/Dbl Wall Conn – Inc. Rear Heat Shield	13”-33cm	9”-23cm	14”-35cm	24.5”-61cm	6”-16cm	16.5”-42cm
Alcove W/Dbl Wall Conn – With Blower Kit Shield	13”-33cm	9”-23cm	14”-35cm	24.5”-61cm	6”-16cm	16.5”-42cm

Alcove Clearances (inches)	Unprotected Surfaces	Protected Surfaces (NFPA-211)
Minimum alcove width	50” – 157.5cm	See NFPA-211
Min. Alcove ceiling from floor with single wall connector	56” – 142.3cm	See NFPA-211
Min. Alcove ceiling from floor with double wall connector	56” – 142.3cm	See NFPA-211

FOR BLOWER KIT, USE KIT #96-57400

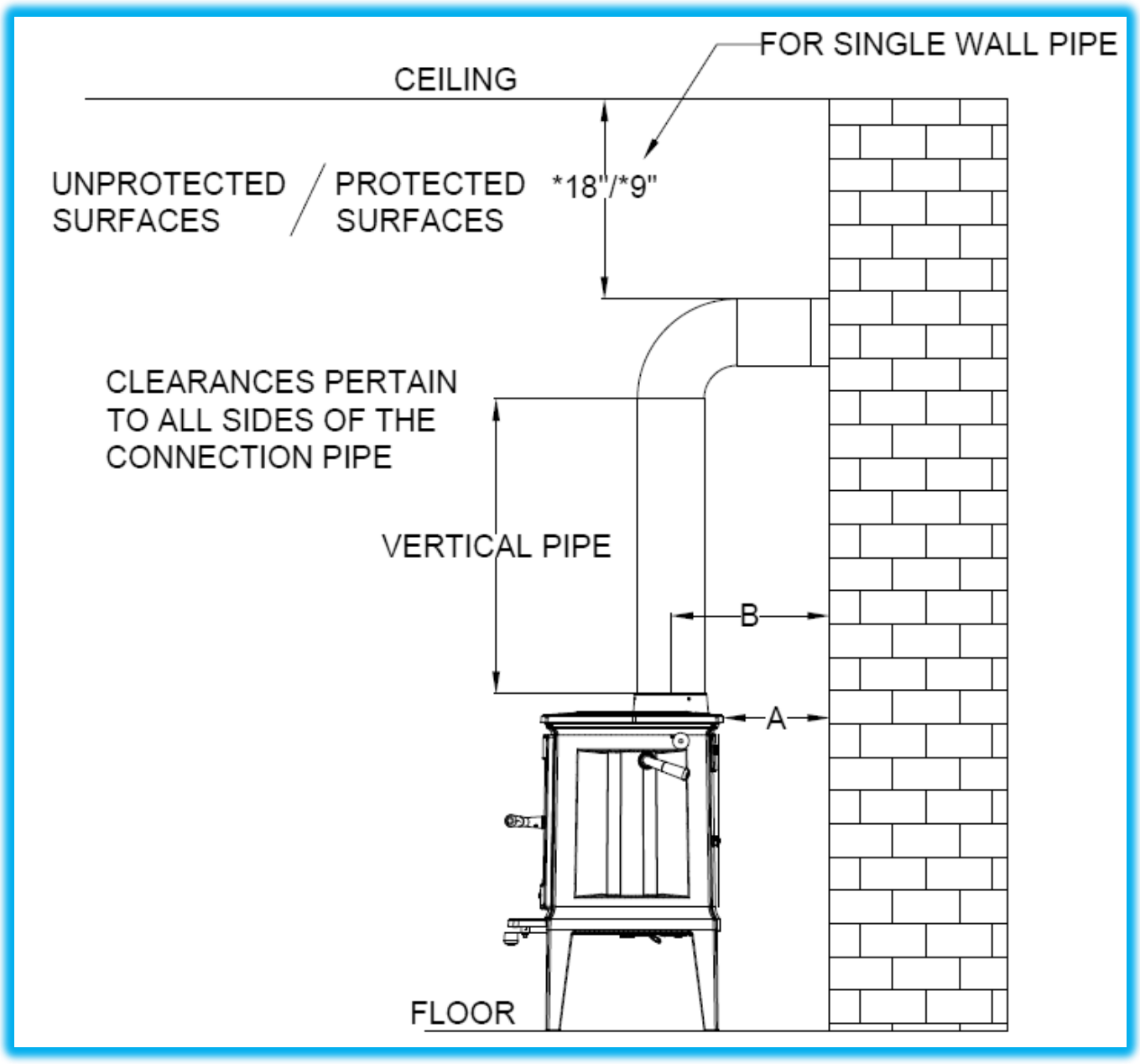

Figure 5 Chimney Connector Clearances

	Single Wall Pipe		Double Wall Pipe	
Through the wall top flue exit	**With Blower Kit Shield****	**Inc. Rear Heat Shield**	**With Blower Kit Shield****	**Inc. Rear Heat Shield**
A	9” (23cm)	9” (23cm)	7” (18 cm)	7” (18 cm)
B	14” (36 cm)	14” (36 cm)	12” (32cm)	12” (32cm)

***For double wall pipe clearance to ceiling, refer to pipe manufacturer specifications.**

See Parallel Clearance to Combustibles for clearances to the sides of the stove.

**** FOR BLOWER KIT, USE KIT #96-57400**

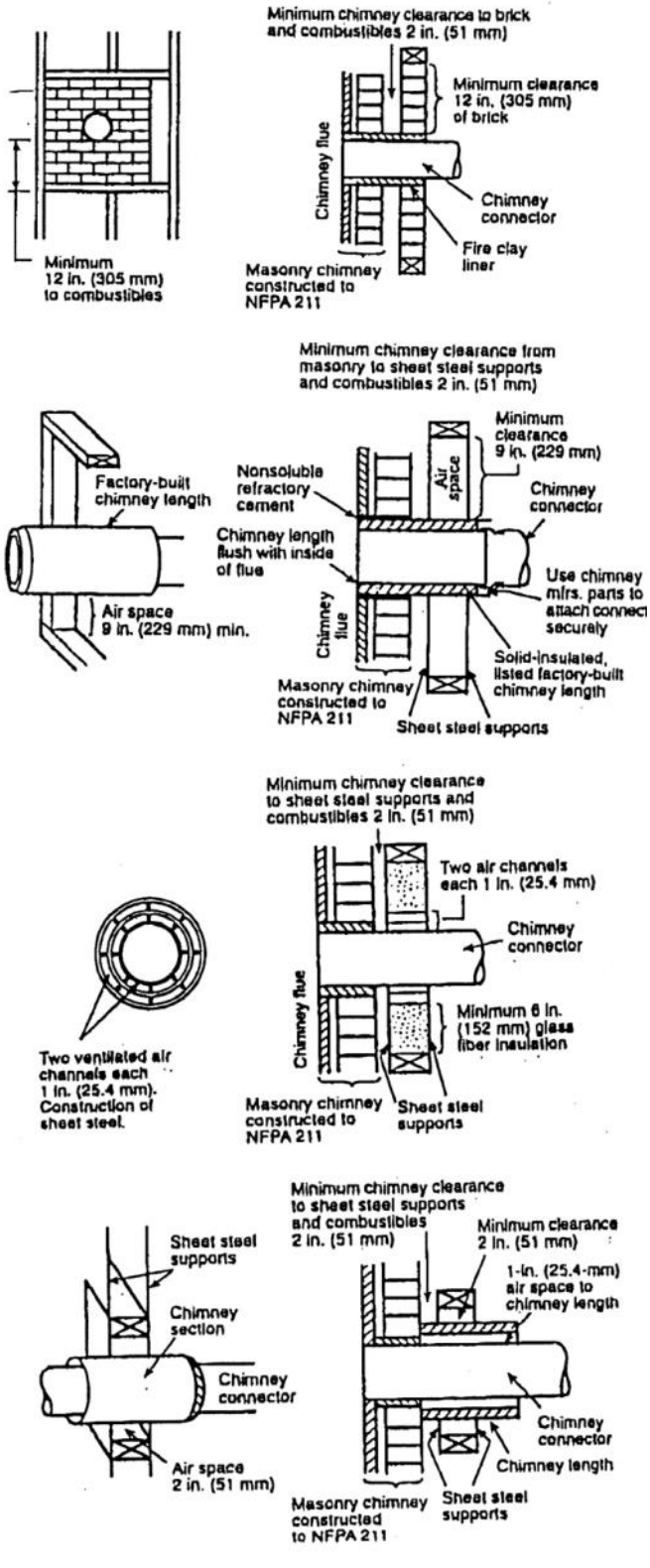

CHIMNEY CONNECTOR SYSTEMS AND CLEARANCES FROM COMBUSTIBLE WALLS FOR RESIDENTIAL HEATING APPLIANCES

A. Minimum 3.5in thick brick masonry all framed into combustible wall with a minimum of 12in. brick separation from clay liner to combustibles. The fire clay liner shall run from outer surface of brick wall to, but not beyond, the inner surface of chimney flue liner and shall be firmly cemented in place.

B. Solid-insulated, listed factory-built chimney length of the same inside diameter as the chimney connector and having 1in. or more of insulation with a minimum 9in. air space between the outer wall of the chimney length and combustibles.

C. Sheet steel chimney connector, minimum 24 gauge in thickness, with a ventilated thimble, minimum 24 gauge in thickness, having two 1in. air channels, separated from combustibles by a minimum of 6in of glass fiber insulation. Opening shall be covered, and thimble supported with a sheet steel support, minimum 24 gauge in thickness.

D. Solid insulated, listed factory-built chimney length with an inside diameter 2in. larger than the chimney connector and having 1in. or more of insulation, serving as a pass-through for a single wall sheet steel chimney connector of minimum 24 gauge thickness, with a minimum 2in. air space between the outer wall of chimney section and combustibles. Minimum length of chimney section shall be 12in. chimney section spaced 1in. away from connector using sheet steel support plates on both ends of chimney section. Opening shall be covered, and chimney section supported on both sides with sheet steel supports securely fastened to wall surfaces of minimum 24-gauge thickness. Fasteners used to secure chimney section shall not penetrate chimney flue liner.

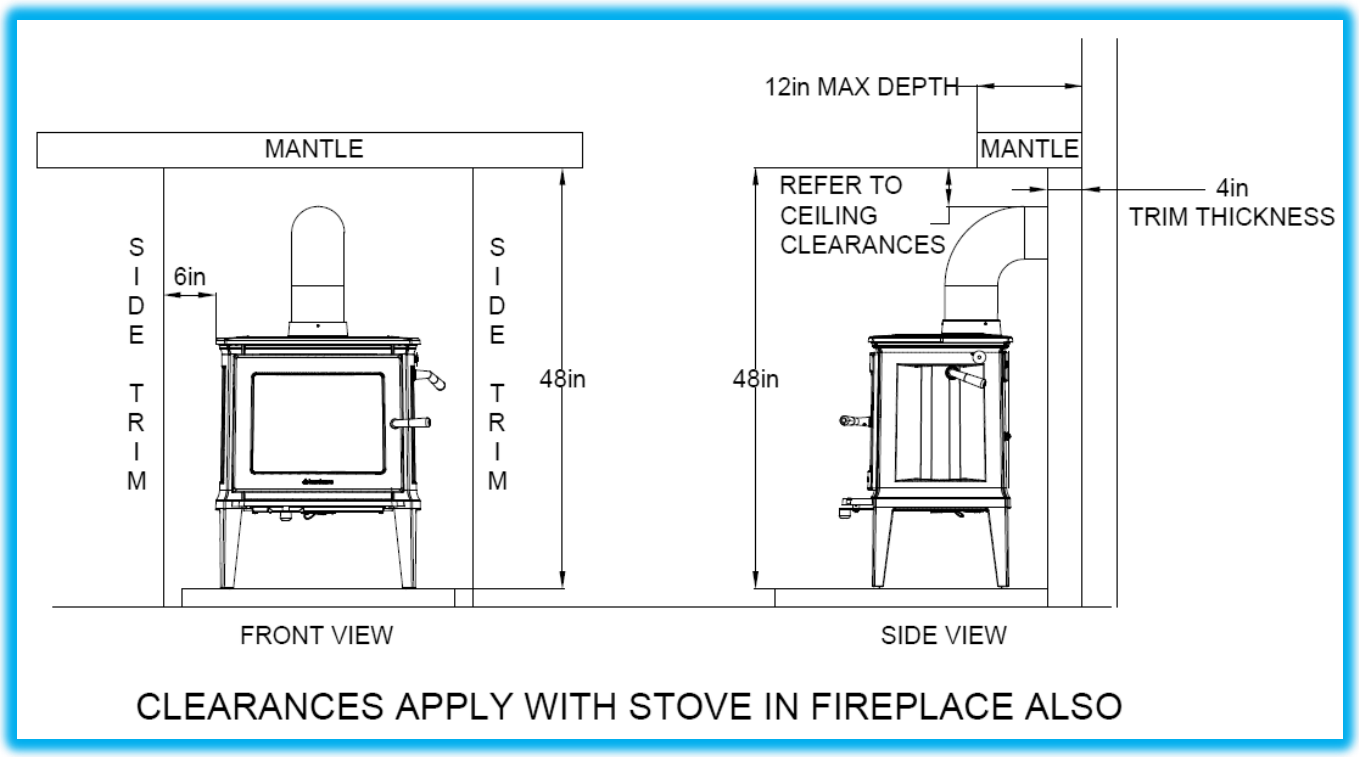

Figure 6 Trim and Mantle Clearances

OUTSIDE AIR SUPPLY

(Optional Kit #96-53400)

You can connect an outside air source directly to this stove using an optional outside air kit. The advantage of providing outside air directly to the stove is that the air used by the stove for combustion is taken from outside the residence rather than from within the room where the stove is located.

The outside air kit for this stove allows for the direct connection of the stove's air intake to a minimum 3" (76 mm) diameter duct (supplied by others)* which leads to the outside of the house. When considering placement of the duct from the outside of the house to the hearth, keep in mind the need to avoid structural members of the house. The outside air kit attaches to the underside of the stove. Refer to the instructions provided with the kit for installation.

*An adaptor for 4" duct is available if needed. KIT #90-53308

When using an outside air kit in Canada, the stove must be attached to your home's floor. Use the shipping clips that came with the stove and fasteners long enough to attach securely to the subfloor. (The clips and fastener heads may be painted to minimize visibility).

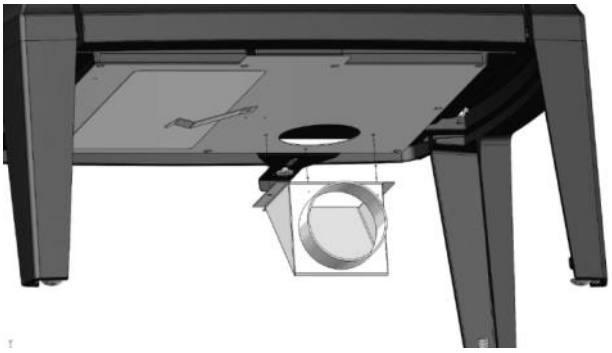

Figure 7 – Outside Air Kit Detail

The International Residential Code (IRC) does not allow the outside air duct to terminate higher than the appliance. Some building officials restrict vertical rise in the duct's termination. Hearthstone recommends the termination be at the same level, or lower than the air intake on the stove. When using an outside air kit in Canada, a damper allowing 100% closure shall be provided.

Locate the termination of the duct on the outside wall of the home in such a manner to avoid the possibility of obstruction by snow, leaves or other material.

Screen the termination using ¼" x ¼" mesh rodent screen and cover it with a rain/wind proof hood (flex pipe, outside termination, mesh, and hood supplied by others) Contact your dealer for availability.

VENTING COMPONENTS & CONFIGURATION REQUIREMENTS

- **DO NOT CONNECT THIS UNIT TO A CHIMNEY FLUE USED BY ANOTHER APPLIANCE**

- Single wall connector that is at least 24 MSG or 25 MSG blued steel stovepipe.

- Double wall connector (Rear pipe) which is used with a listed, factory-built "Type HT" chimney or with a masonry chimney to reduce clearances, is available from several manufacturers, your dealer can help you choose. Some air insulated connector pipe models available are Simpson Dura Vent DVL and Metalbestos DS. Security, GSW and Ameritec also have acceptable Rear connector pipe.

- When used in a mobile home, a spark arrester is required. (See page 18)

- The chimney connector cannot pass through a floor or ceiling, nor any attic or roof space, closet or similar concealed space. Where venting requires passage through a wall or partition of combustible construction, the installation must conform to NFPA Code 211 or CAN/CSA - B365.

- Be sure to follow the manufacturer's instructions to maintain an effective vapor barrier at the location where the chimney of other component penetrates the exterior of the structure

- It is very important to follow minimum clearances for chimney connectors to combustibles such as walls and ceilings when installing the stove. Typical chimney connector clearances are outlined below. The single wall clearances are generic; the double wall clearances shown are specifically for Simpson DuraVent DVL and may vary with other brands. ***Check the specifications from the manufacturer of your connector.***

COMPONENTS OF A VENTING SYSTEM

The complete venting system consists of several components: chimney connector, wall thimble, wall pass-through, chimney, and liner. It is *absolutely necessary* that you install all of these components and maintain the clearances to combustibles discussed earlier to ensure a safe stove installation.

To protect against the possibility of a house fire, you *must properly install and constantly maintain the venting system in good condition. Be sure to inspect the chimney and chimney connector and keep it clean.* Upon inspection, immediately replace rusted, cracked, or broken components. Failure to follow these instructions and specified components or using make-shift compromises can result in fire, property damage, bodily injury, and even death.

- The *chimney connector* is the stovepipe from the woodstove to the chimney. The chimney connector stovepipe is 6" (152 mm) diameter, 24 MSG or 25 MSG blued steel connector pipe. *Do not use aluminum or galvanized steel pipe* - they cannot withstand the extreme temperatures of a wood fire.
- The *thimble* is a manufactured (or site-constructed) device installed in combustible walls through which the chimney connector passes to the chimney. It keeps the walls from igniting. You must use a wall thimble when installing a chimney connector through a combustible wall to the chimney.

- A *wall pass-through* (or chimney support package) also keeps the walls from igniting. You must use one when connecting through a wall or ceiling to a prefabricated chimney.

- Only install this stove to a *lined masonry chimney* or an *approved high temperature prefabricated residential* type building heating appliance chimney. *Do not* connect this stove to a chimney serving another appliance; you will compromise the safe operation of both the wood stove and the connected appliance.

- A *liner* is the UL 1777 or ULC S635 (for factory built fireplace or masonry) chimney.

You must connect your stove to a chimney comparable to those recommended in this manual. *Do not use stovepipe as a chimney*. Use stovepipe for freestanding installations only to connect the stove to a proper chimney.

- **WARNING: DO NOT CONNECT THIS APPLIANCE TO ANY AIR DISTRIBUTION DUCT OR SYSTEM.**

INSTALLING A VENTING SYSTEM

Attach stovepipe sections to the flue collar and to each other with the crimped end toward the stove. If creosote builds up, this allows the creosote to run into the stove and not on the outside of the stovepipe or onto the stove.

Secure all joints, including attaching the stovepipe to the stove's flue collar, with three sheet metal screws. Install #10 x 1/2" (3 mm x 13 mm) sheet metal screws into the holes pre-drilled in the flue collar. Disregarding the screws can cause joints to separate from the vibrations that result from a creosote chimney fire.

You can simplify connecting stovepipe by using additional accessories such as telescoping pipes, slip-connectors or clean-out tees. These accessories ease the periodic inspection of your chimney, as well as allow you to dismantle the stovepipe easily (without moving the stove).

Install the stove as close as practical to the chimney, while maintaining all proper clearances. Install stovepipe that is as short and as straight as possible. Horizontal runs of stovepipe must always rise away from the stove at a minimum of 1/4" per foot (21mm/m).

We do not recommend long runs of stovepipe to increase heat dispersal. Longer lengths of stovepipe, or more connecting elbows, than necessary increase the chances of draft resistance and the accumulation of creosote buildup.

In general, you do not need to install a stovepipe damper with the Craftsbury. Some installations, however, could benefit from a stovepipe damper, such as a tall chimney which can create a higher than normal draft. In such cases, a damper can help regulate the draft. The Craftsbury requires a draft between 0.06" and 0.1" WC. For drafts above 0.1" WC, install a stovepipe damper. Check the draft at stove installation time.

Remember, the NFPA recommends minimum clearances for chimney connectors to combustibles such as walls and ceilings. Once the stove is installed at safe distances from these combustible surfaces, it is also important to maintain these connector clearances for the remainder of the installation.

CONNECTING THE STOVE TO A CHIMNEY

You can install your Craftsbury to a prefabricated metal chimney, or to a masonry chimney.

This room heater must be connected to (1) a listed Type HT (2100° F) chimney per UL 103 or ULC S629, or (2) a code-approved masonry chimney with a flue liner. The chimney size should not be less than the flue collar, or more than three times greater than the cross-sectional area of the flue collar.

We recommend installing a cleanout tee where possible to simplify chimney cleaning and maintenance.

Connecting to a Prefabricated Metal Chimney

There are two ways to install a prefabricated metal chimney:

- An *interior* installation where the chimney passes inside the residence through the ceiling and roof.
- An *exterior* installation where the chimney passes through the wall behind the stove then up the outside of the residence.

Whenever possible, choose an interior chimney. An interior chimney heats up quickly and retains its heat; thus promotes a better draft and discourages the formation of creosote. An exterior chimney does not benefit from the warmth of the building, so it typically operates at lower flue temperatures than an interior chimney and may experience increased creosote accumulation.

When connecting the Craftsbury to a prefabricated metal chimney, you must follow, precisely, the manufacturer's installation instructions. Use only Type HT (2100° F), prefabricated metal chimneys listed per UL 103 or ULC S629 standards.

Ensure the size of the prefabricated chimney's flue is appropriate for the Craftsbury. The Craftsbury requires a 6" (152 mm) inside diameter flue for new installations. A 6" diameter flue provides adequate draft and performance. You can use an 8" (203 mm) diameter existing flue with a reducer. An oversized flue contributes to creosote accumulation. (In this case, bigger is NOT better.)

When purchasing a prefabricated chimney to install with your stove, Ensure you also purchase from the same manufacturer the wall pass-through (or ceiling support package), "T" section package, fire-stops (when needed), insulation shield, roof flashing, chimney cap, and any other required accessories. Follow the manufacturer's instructions when installing the chimney and accessories. In addition, ensure you maintain all manufacturers' recommendations for the proper clearances to the chimney.

Connection to a Masonry Chimney

Consider two primary elements when connecting your stove to a masonry chimney: the chimney itself and

the thimble where the stovepipe connects to the chimney. **Use only code approved masonry chimneys containing a proper flue liner.**

Before connecting to a masonry chimney, hire a professional to examine the chimney for cracks, loose mortar, and other signs of deterioration and blockage. If the chimney needs repair, complete them before installing and using your stove. Do not install your stove until the chimney is safe for use.

Ensure the chimney's cleanout is complete and working properly. To avoid a loss of draft, the cleanout door must close completely and provide a tight seal. If the cleanout door leaks, the chimney will cool, your stove will perform poorly, and creosote can form.

Ensure the size of the chimney's flue is appropriate for this stove and that it is not too large. Use a masonry chimney with a maximum 6" Diameter or 8" x 8" (203 mm x 203 mm) tile size for best results. An oversized flue contributes to the accumulation of creosote.

Use the following checklist to ensure that your masonry chimney meets these minimum requirements:

MASONRY CHIMNEY WALL CONSTRUCTION:

- Mortared brick or modular block at least 4" (102 mm) thick – must use liner
- A mortared rubble or stone wall – must use liner

FLUE LINER OPTIONS:

- Tile - minimum wall thickness of 5/8" (16 mm), installed with refractory mortar, and with at least 1" (25 mm) air space around the liner
- Stainless steel - UL listed 6" diameter, insulated or wrapped liner, or the space around the liner filled with vermiculite or suitable material (these keep the liner warmer for better performance)
- Ensure any equivalent flue liner is a listed chimney liner system meeting type HT requirements or other approved material.

INTERIOR CHIMNEY REQUIREMENTS:

- Must have at least 2" (51 mm) clearance to combustible materials
- Must install fire stops at the spaces where the chimney passes through floors and/or ceiling
- Any insulation material must be at least 2" (51 mm) from the chimney

EXTERIOR CHIMNEY REQUIREMENTS:

- At least 1" (25 mm) clearance to combustible materials

CHIMNEY HEIGHT REQUIREMENTS (SEE *FIGURE 9*):

- At least 3 feet (0.9 m) higher than the highest part of the roof opening through which it passes.
- At least 2 feet (0.6 m) higher than any part of the roof within 10 feet (3 m) measured horizontally from the top of the chimney.

The recommended minimum chimney height is 10 feet (3 m) off the floor. The recommended maximum chimney height is 30 feet (9m).The Craftsbury requires a draft between 0.06" and 0.1" water column. Ensure your chimney is long enough to provide the minimum draft, and use a damper if your installation has a required chimney height that provides too much draft.

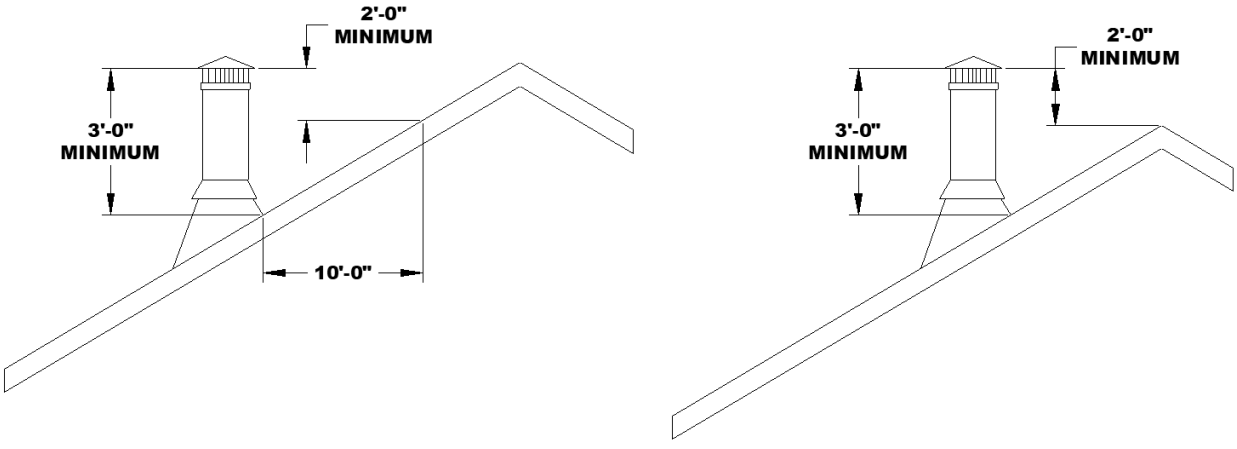

Figure 8 – Chimney Height Requirements

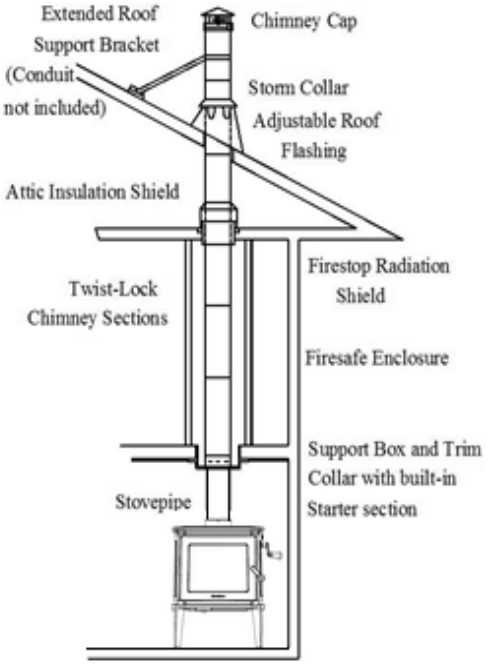

Two story house installation with attic.

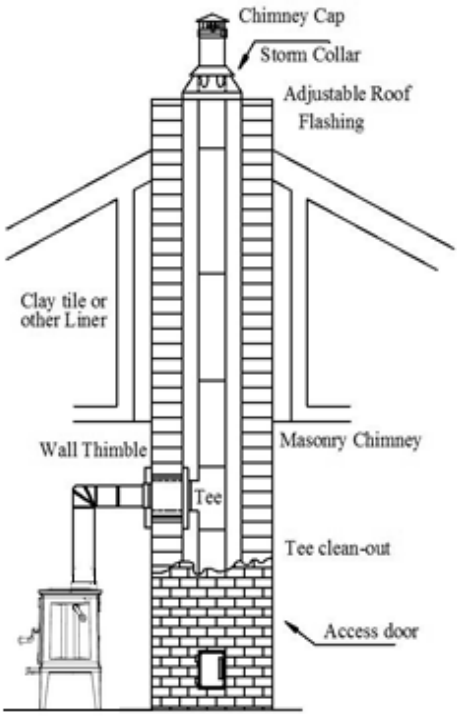

Chimney pipe through Clay tile
or other Lined Masonry Chimney

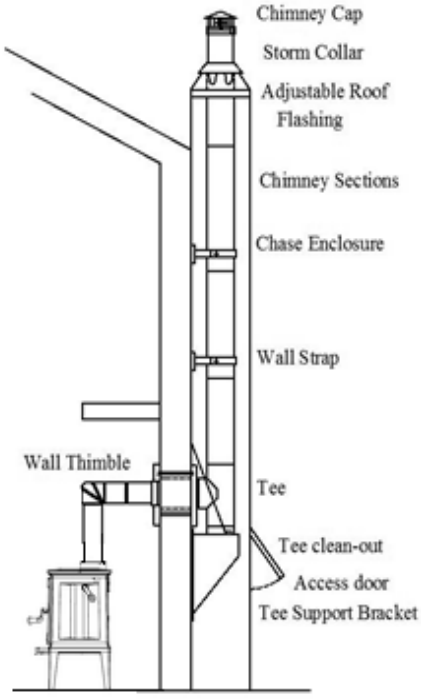

Chimney through outer wall with enclosed chase.
Chimney is supported by Tee Support Bracket.

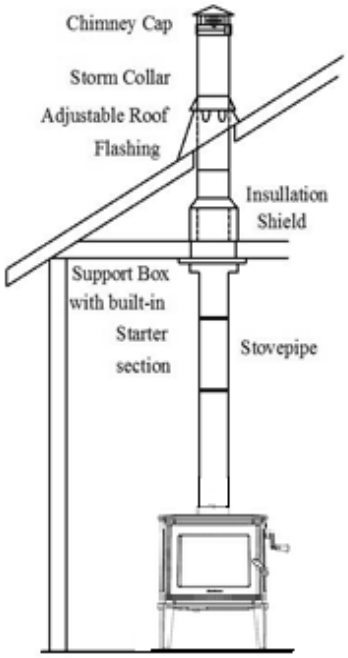

One story house installation with attic.
Chimney is supported by Ceiling.

Figure 9 – Typical Chimney Configurations

INSTALLING IN A MOBILE HOME

Follow these special requirements for installing your stove in a mobile home.

- Install the stove in accordance with 24 CFR, Part 3280 (HUD)
- An outside air kit must be used in all mobile home installations. See page 12 for details.
- Permanently attach the stove to your mobile home's floor. Use the shipping clips that came with the stove and fasteners long enough to attach securely to the subfloor. (The clips and fastener heads may be painted to minimize visibility).

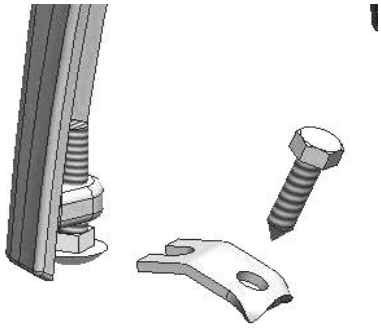

Figure 8 - Lock Down Detail

- Install a Mobile Home Chimney & Connector Kit*.

  Each kit must include:
  Stainless spark arrester cap, storm collar, Adjustable vented flashing – 0/12 – 6/12, Two 24" chimney pipes, 24" support box with built-in starter section and trim.

  * Install a Mobile Home Chimney and Connector Kit conforming to US/UL103 or CAN/ULC-S629, Standard for Factory-Built Chimneys.

- **WARNING: DO NOT INSTALL IN A SLEEPING ROOM IN A MOBILE HOME.**
- **CAUTION: MAINTAIN THE STRUCTURAL INTEGRITY OF THE MOBILE HOME WALLS, FLOOR, CEILING, AND ROOF WHEN INSTALLING AND USING YOUR STOVE**.
- **FAILURE TO FOLLOW THESE INSTRUCTIONS AND SPECIFIED COMPONENTS OR USING MAKE-SHIFT COMPROMISES CAN RESULT IN FIRE, PROPERTY DAMAGE, BODILY INJURY, AND EVEN DEATH.**
- **Burning any fuel other than wood in this unit could generate dangerous levels of carbon monoxide within the living space.**
- **THE FRONT DOOR MUST REMAIN CLOSED WHEN IN OPERATION EXCEPT FOR START UP AND LOADING. Leaving the door open during use could cause any smoke or fire detectors in the home to be set off or a fire could escape the firebox and start the room on fire.**
- **If this unit is installed in a mobile home, care must be taken to ensure adequate air is available. If not enough air is available it could starve the room of all the oxygen. (See page 27 for more details)**
- **The chimney should be attached directly to the stove and must extend at least 3 feet (.9 m) above the part of the roof through which it passes. The top of the chimney is to be at least 2 feet (.6 m) above the highest elevation of any part of the mobile home within 10 feet (3 m) of the chimney.**
- **All roof-chimney terminations should be able to be readily removed / re-installed at or below an elevation of 13-1/2 feet (4.1 m) above ground level without the use of special tools or instructions. The chimney assembly shall be provided with a mechanical securement means to secure the chimney to the ceiling support box.**
- **When a chimney exits the mobile home at a location other than through the roof, and exits at a point 7 feet (2.1 m) or less above the ground level on which the mobile home is positioned, a guard or method of enclosing the chimney shall be provided at the point of exit for a height up to 7 feet.**
- **The chimney guard shall not allow the passage of a ¾ inch (19.1 mm) diameter rod, and a ½" (12.7 mm) diameter rod shall not be able to touch the chimney when inserted through any part of the guard a distance of 4 inches (102 mm).**

- **The chimney shall be provided with a spark arrester secured to the chimney. The net free area of the arrester above the chimney outlet shall not be less than 4 times the net area of the chimney outlet, and the vertical height of the arrester above the chimney outlet shall not be less than ½ the diameter of the chimney flue. Openings shall not permit the passage of a sphere having a diameter of ½ inch (12.7 mm), and shall allow the passage of a sphere of 3/8" (9.6 mm).**

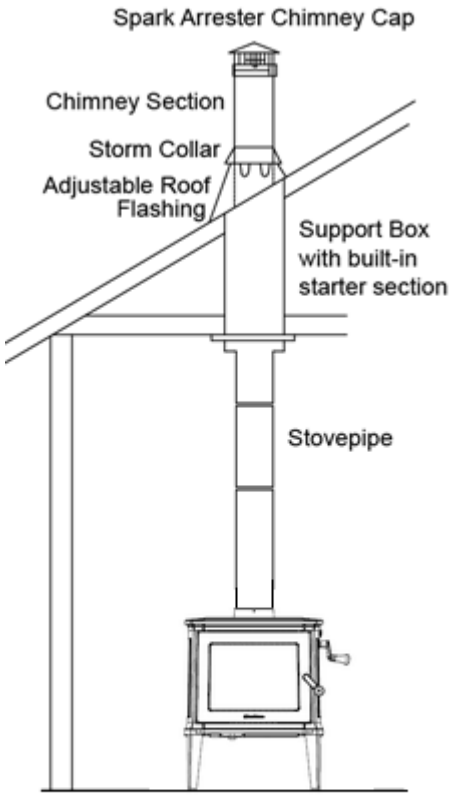

Mobile home installation.
One story house installation with attic.
Chimney is supported by Ceiling.

Figure - 9

- **CAUTION: REMOVE THE CHIMNEY WHEN TRANSPORTING THE MOBILE HOME!**

- Be sure to follow the manufacturer's instructions to maintain an effective vapor barrier at the location where the chimney of other component penetrates the exterior of the structure

OPERATION

Once your Craftsbury is installed, you are ready to light a fire.

Every installation, season's firewood, and operator's technique varies. Learn how to use your stove most efficiently for your installation. We can give you the basic principles, but only you can ensure maximizing the potential of your stove while also operating it safely.

- **WARNING: HOT WHILE IN OPERATION! KEEP CHILDREN, PETS, CLOTHING AND FURNITURE AWAY. CONTACT MAY CAUSE SKIN BURNS.**

Read this entire chapter before lighting your first fire. It explains the controls and features of your wood stove, how to choose firewood, and how to use your stove on a daily basis.

CONTROLS AND FEATURES

Before lighting any fires, become familiar with the location and operation of your stove's controls and features and learn how to use them (*See Figure 10*). For your own safety, do not modify these features in any way. We recommend you use fireplace gloves when the stove is in operation and hot.

Figure 10 - Controls & Features

***FRONT DOOR HANDLE*:** The firebox door allows you to load wood into your stove; a wood handle operates the door. To open the door, pull up on the handle and swing the door away from the stove. To latch the door, push the door tightly towards the firebox then continue to push the handle in and down until it latches shut. Gently pull on the door handle to make sure it is properly latched.

PRIMARY AIR CONTROL: The primary air control lever is located under the ash lip. The primary air control allows you to regulate the amount of air entering the firebox. Generally, the more air allowed into the firebox, the faster the rate of burn and the higher the heat output; conversely, less air creates a slower burn, with lower heat output. For maximum airflow, pull the lever out as far as possible; move the lever inwards as far as possible for minimum airflow (does not close completely).

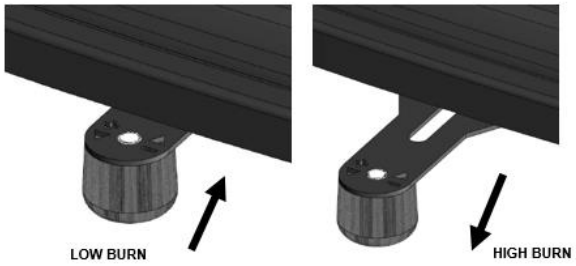

Figure 11 – Air Control

BYPASS HANDLE: The bypass handle controls the bypass door inside the stove. When the handle is pointed towards the front of the stove, the bypass door is open, and when the handle is pointed towards the rear of the stove, the bypass door is closed. The bypass door directs the flow of combustion products through or around the catalytic combustor. When the bypass handle is open, combustion products are directed around the catalytic combustor. The bypass handle should be open when first staring a fire until the catalytic combustor heats up to activation temperature, and whenever opening the front door to load the stove. When the bypass handle is closed, combustion products are directed through the catalytic combustor. The bypass handle should be closed once the catalytic combustor heats up to activation temperature, and remain closed whenever the stove is burning and in the active temperature range.

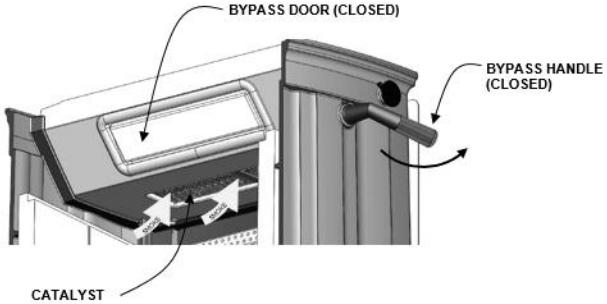

Figure 12 – Bypass Closed

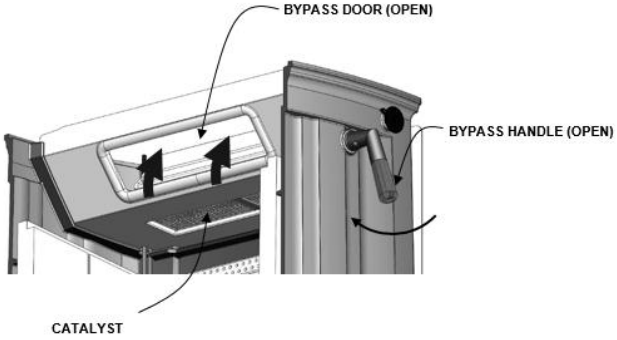

Figure 13 – Bypass Open

CATALYST THERMOMETER: The catalyst thermometer monitors the downstream temperature of the catalysts, and indicates when the stove is in the active range for the catalysts. When the stove is in the "active" range, the bypass handle should be closed. When the stove is in the "Inactive" range, the bypass handle should be opened until the stove heats up. If the thermometer is in the "Too Hot" range, keep the door closed, fully close the air control, and allow the stove to cool down until the thermometer falls into the "Active" Range. Once the catalyst thermometer has reached the active range, heat generated from burning smoke keeps the catalysts warm and active as long as fuel remains in the stove. The Craftsbury typically operates in the 800 ºF to 1300 ºF range.

Figure 14 – Catalyst Thermometer

CHOOSING FIREWOOD

Burn only natural firewood (known as cordwood) in the Craftsbury Model 8640 Wood Heater. This stove is not designed to burn other fuels.

- **CAUTION: DO NOT USE CHEMICALS OR FLAMMABLE FLUIDS TO START THE FIRE. DO NOT USE CHARCOAL, PELLETS, COAL, ARTIFICIAL LOGS OR ANY OTHER MATERIALS AS FUEL; THEY ARE NOT SAFE. DO NOT BURN GARBAGE OR FLAMMABLE FLUIDS.**
- **THE USE OF UNAUTHORIZED FUEL SUCH AS COAL COULD PRODUCE HIGH LEVELS OF CARBON DIOXIDE IN THE LIVING SPACE. AT HIGH LEVELS CARBON DIOXIDE COULD RESULT IN PERSONAL INJURY OR DEATH.**

The quality of your firewood directly affects heat output, duration of burn and performance of your stove. Softwoods generally burn hotter and faster, while hardwoods burn longer and produce better coals. Density and moisture content are two critical factors to consider when purchasing wood.

The following is a list of some wood species and their relative BTU (British Thermal Unit) content. The higher the BTU content, the longer the burn. Firewood with higher BTUs is generally ideal for a wood stove.

Burn untreated wood only. Other materials such as wood preservatives, metal foils, coal, plastic, garbage, sulphur, or oil may damage the catalysts.

Wood Heat Value: Sorted By Btu Content		
Common Name	**Lb/ cord**	**MBTU/ cord**
High		
Osage Orange (Hedge)	4,728	32.9
Hickory, Shagbark	4,327	27.7
Hop Hornbeam (Ironwood)	4,267	27.3
Beech, Blue (Ironwood)	3,890	26.8
Birch, Black	3,890	26.8
Locust, Black	3,890	26.8
Hickory, Bitternut	3,832	26.7
Locust, Honey	3,832	26.7
Apple	4,100	26.5
Mulberry	3,712	25.8
Oak, White	4,012	25.7
Medium High		
Beech, European	3,757	24
Maple, Sugar	3,757	24
Oak, Red	3,757	24
Ash, White	3,689	23.6
Birch, Yellow	3,689	23.6
Medium		
Juniper, Rocky Mtn	3,150	21.8
Elm, Red	3,112	21.6
Coffee tree, Kentucky	3.112	21.6
Hackberry	3,247	20.8
Tamarack	3,247	20.8
Birch, Gray	3,179	20.3
Birch, White (Paper)	3,179	20.3
Walnut, Black	3,192	20.2
Cherry	3,120	20
Ash, Green	2,880	19.9
Cherry, Black	2,880	19.9
Elm, American	3,052	19.5
Elm, White	3,052	19.5
Sycamore	2,808	19.5
Ash, Black	2,992	19.1
Maple, Red	2,924	18.7
Fir, Douglas	2,900	18.1
Medium Low		
Boxelder	2,797	17.9
Alder, Red	2,710	17.2
Pine, Jack	2,669	17.1
Pine, Norway (Red Pine)	2,669	17.1
Pine, Pitch	2,669	17.1
Catalpa	2,360	16.4
Hemlock	2,482	15.9
Spruce, Black	2,482	15.9
Pine, Ponderosa	2,380	15.2
Low		
Aspen, American	2,290	14.7
Butternut (Walnut, White)	2,100	14.5
Spruce	2,100	14.5
Willow	2,100	14.5
Fir, Balsam	2,236	14.3
Pine, White (Eastern, Western)	2,236	14.3
Fir, Concolor (White)	2,104	14.1
Basswood (Linden)	2,108	13.8
Buckeye, Ohio	1,984	13.8
Cottonwood	2,108	13.5
Cedar, White	1,913	12.2

Moisture content also plays a key role in the performance of your stove. Wood freshly cut from a living tree (green wood) contains a great deal of moisture. As you might expect, green wood burns poorly. You must season green wood before using it in your wood stove. To season green wood properly, split, stack, and allow it to air dry for a period of one year. Green wood may provide less than 2000 Btu per pound, whereas dry wood can provide up to 7000 Btu per pound.

Stack the firewood on skids or blocks to keep it off the ground, cover only the top of the stack. Plastic or tarps that cover the sides of the woodpile trap moisture and prevent the wood from drying. As for stacking, an old Vermonter said, "The spaces between the logs should be large enough for a mouse to get through, but not for the cat that's chasing it."

- **CAUTION: DO NOT STORE FIREWOOD WITHIN THE STOVE'S SPECIFIED CLEARANCES TO COMBUSTIBLE MATERIALS.**

BUILDING A FIRE

Once you understand the controls of your wood stove and have the appropriate firewood, you are ready to start a fire.

- **WARNING: NEVER USE GASOLINE, GASOLINE-TYPE LANTERN FUEL, KEROSENE, CHARCOAL LIGHTER FLUID, OR SIMILAR LIQUIDS TO START OR 'FRESHEN UP' A FIRE IN THIS HEATER. KEEP ALL SUCH LIQUIDS WELL AWAY FROM THE HEATER WHILE IT IS IN USE.**

BREAKING IN YOUR WOOD STOVE

It is imperative that your stove is "broken in" gradually. Soapstone must be "seasoned"; over-firing a new stove may cause soapstone to crack or may damage other stove parts. Natural moisture in the freshly quarried soapstone must be driven out slowly to minimize the “shock” to the stone of its first exposure to high firebox temperatures. In addition, the asbestos-free furnace cement must be cured slowly to ensure adequate sealing and bonding.

When you light your first fires, the woodstove will emit some smoke and fumes. This is normal “off-gassing” of the paints and oils used when manufacturing the woodstove. If you find it necessary, open a few windows to vent your room. The smoke and fumes will usually subside after 10 to 20 minutes of operation. The odor and smoke will end once the stove is “cured”.

The first few fires of the season may produce other odors from impurities that exist in the area immediately surrounding the stove. Some potential impurities are cleaning solvents, paint solvents, cigarette smoke, and soot from scented candles, pet hair, dust, adhesives, a new carpet, and new textiles. These odors will dissipate over time. You can alleviate these odors by opening a few windows or otherwise creating additional ventilation around your stove. If any odor persists, contact your dealer or an authorized service technician.

If you adhere to the operating procedures in this manual, the steel, cast iron, and soapstone components of your stove will give you many years of trouble-free use. With use, the color of the soapstone may change and small fractures may appear on the surface. These changes do not affect the function of the stove. If a panel breaks completely, it must be replaced

Avoid the following conditions that can cause the glass, soapstone, steel or cast iron pieces to break:

- Do not throw wood into the stove.
- Do not use the door as a lever to force wood into the stove.
- Do not load wood encrusted with ice into a burning stove - the thermal shock can cause damage.
- Do not use a manufactured log grate or otherwise support the fuel. Burn the fire directly on the floor of the firebox.

BUILDING A BREAK IN FIRE

1) Open the bypass handle.Open the front door and place five or six double sheets of tightly twisted newspaper in the center of the firebox. Arrange kindling in a crisscross pattern over the newspaper. Kindling should be approximately ten pieces, 1/2" (13 mm) in diameter and 10" to 16" (254 mm to 457 mm) long.
2) Fully open the primary air control by pulling the control handle towards you, away from the firebox.
3) Light the paper under the kindling. Leave the door slightly ajar momentarily until the kindling has started to burn and draft begins to pull.
4) Close the door and allow the fire to burn. Keep the door closed while the stove is in use.
5) KEEP A WATCHFUL EYE ON YOUR STOVE to maintain a steady, low-heat fire. Your first fire should make the stove warm but **not hot to the touch**. Visible steam, or boiling moisture and hissing indicate the soapstone is too hot. At most, a few small chunks of wood should be added to the fire to reach safe break-in temperatures.
6) Once the stove is warm but **not hot to the touch,** close the primary air control by pushing it fully inward toward the stove to allow the fire to die out completely.
7) Let the stove return to room temperature.

Your first fire and first fire each season thereafter should be built and maintained as outlined above. Your patience will be rewarded by a properly seasoned stove.

- NOTE: The cool flue gas temperatures present during the break-in procedure may cause rapid creosote build-up. The door glass may also get dirty. A good hot fire will clean it. We recommend a visual inspection (and cleaning if necessary) of your stovepipe and chimney once the break-in procedure is completed.

NORMAL OPERATION

BUILDING A FIRE FOR EVERYDAY USE

1) Open the bypass handle. Open the front door and place five or six double sheets of tightly twisted newspaper in the center of the firebox. Arrange kindling in a tee-pee configuration over the newspaper. Use approximately 10 pieces of

kindling, 1/2" (13 mm) in diameter and 10" to 16" (254 mm to 406 mm) long.

2) Fully open the primary air control by pulling the lever completely out, away from the firebox.

3) Light the paper under the kindling. Leave the front door slightly ajar momentarily until the kindling begins to burn and draft begins to pull.

4) Close the door and allow the fire to burn.

5) Once the kindling is burning, open the front door and add logs, small at first, to build the fire up. Ensure you keep the logs away from the glass in front in order for the air-wash system to work properly. Keep the front door closed while the stove is in use.

   CAUTION: DO NOT BUILD THE FIRE TOO CLOSE TO THE GLASS. KEEPING THE FIRE TOWARDS THE CENTER OF THE FIRE BOX WILL KEEP COALS FROM BUILDING UP AGAINST THE GLASS DURING RELOADING.

6) Once the fire is burning well, and the catalyst thermometer indicates that the stove is in the active range, close the bypass handle. Now the combustion products are passing through the catalytic combustor, and your stove will be burning at its optimal efficiency.

7) After closing the bypass door, allow the stove to run on a high setting for around 20 minutes to ensure the catalytic combustor stays in the active range. This will also allow the fire to burn off any residue on the door glass from any previous low-burn fires

8) Use the primary air control to regulate the desired rate of burn. Pull the handle towards you for a higher burn rate, and push the handle towards the stove for a lower burn rate. The air control does not close completely.

Note: Always remember to open the bypass handle before opening the front door. When opening the front door to reload or re-arrange logs, it is advisable to open the door just a crack, pause for a moment then open the door completely. This procedure allows the firebox to clear of smoke before the door is open fully. In addition, reloading on a bed of hot, red coals reduces smoking time and brings fresh fuel up to a high temperature rapidly. During the refueling and rekindling of a cool fire, or a fire that has burned down to the charcoal phase, operate the stove at a medium to high firing rate for about 10 minutes to ensure that the catalysts reach approximately 600 °F. Once the catalysts reach operating temperature, the bypass handle can be closed. When reloading the stove, try to keep an open path behind the Lower Primary Air Opening (LPAO). It is helpful to leave a small valley in the coal bed behind the LPAO to insure faster re-lighting.

CATALYTIC COMBUSTOR OPERATION

The Craftsbury uses a catalytic combustor to ensure highly clean and efficient burns. The catalytic combustor is made from a stainless steel corrugation that is coated with a catalytic material. The catalytic

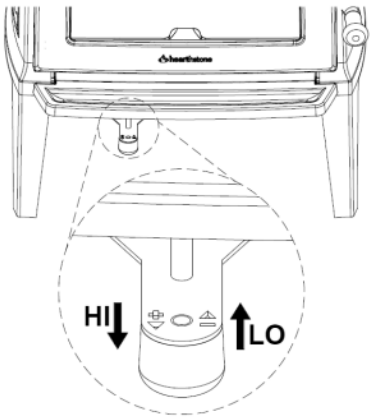

combustor becomes active around 500 ºF (260ºC), helping to burn up smoke and any remaining particles that were not fully burned in the firebox. During the startup of a cold stove, a medium to high firing rate must be maintained for about 20 minutes. This ensures that the stove, catalysts, and fuel are all stabilized and at proper operating temperatures. Even though it is possible to have gas temperatures reach 500 °F (260ºC) within 2 to 3 minutes after a fire is started, if the fire is allowed to die down immediately, it may go out or the combustor may stop working. Once the stove and catalytic combustor heat up, heat generated from burning smoke keeps the catalysts warm and active as long as fuel remains in the stove. You stove will burn the cleanest and most efficiently when the catalysts are in the active range. There should be little to no visible smoke from your chimney when the catalysts are in the active zone and fully functional.

BURN RATE

This wood heater has a manufacturer-set minimum low burn rate that must not be altered. It is against federal regulations to alter this setting or otherwise operate this wood heater in a manner inconsistent with operating instructions in this manual

LOW BURN: Move the air control lever all the way inward toward the stove. (*See figure 13*). This closes

the air shutter to its minimum opening. A low burn rate over extended periods is not advisable as it can promote the accumulation of creosote. Inspect the venting system frequently if using low burn rates consistently.

MEDIUM LOW BURN: With the primary air control in the low position, pull the air control forward (a little less than 1/4"). A medium-low burn rate is the typical setting and is preferable if the stove is unattended. At this burn rate, a little goes a long way.

MEDIUM HIGH BURN: With the primary air control in the low position, pull the air control forward (a little less than 3/8")

HIGH BURN: Completely open the primary air control by moving it all the way outward toward the operator. Fully load the firebox with wood on a bed of hot coals or on an actively flaming fire. To minimize creosote accumulation, run the stove on high once or twice daily for 35 to 45 minutes to fully heat the stovepipe and chimney.

CAUTION: Do not burn fuel other than cordwood in your stove.

OVER-FIRE CAUTION

Over-firing means the stove is operating at temperatures above normal temperatures reached during High Burns outlined in the *BURN RATE* section. Carefully avoid over-firing, as it will damage the stove. Symptoms of chronic over-firing can include warped components, short burn times, a roaring sound in the stove or stovepipe, and discoloration of the stovepipe. A properly installed stove using fuel and following operating procedures as outlined in this manual should not over-fire.

Excessive draft, inappropriate fuel, and operator error can cause over-firing. Correct an over-fire situation as follows:

- **EXCESSIVE DRAFT:** Contact your local dealer to have a draft reading taken. Any draft in excess of 0.1 WC requires a damper in the stovepipe. Some installations may require more than one damper.
- **INAPPROPRIATE FUEL:** Do not burn coal; kiln dried lumber, wax logs, compressed wood, highly volatile fuels or combustibles, or anything other than natural cordwood.
- **OPERATOR ERROR:** Ensure all the gaskets are in good condition. Replace worn out or compressed gaskets. Only burn the stove with the firing and ash doors in the closed position.

If you suspect your stove is over-firing, discontinue use and contact your dealer immediately. **Damage caused by over-firing is not covered by your warranty**. Results of over-firing can include warped or burned out internal parts, cracked refractory panels, discolored or warped external parts, and damaged finish.

- **ANY SIGNS OF OVER-FIRING WILL VOID YOUR WARRANTY!**
- **THE FRONT DOOR MUST REMAIN CLOSED WHEN IN OPERATION**

REMOVAL AND DISPOSAL OF ASHES

You can leave a thin layer of ashes in the firebox if preferred. Allow fire to die down or go out completely. It is important to prevent ashes from building up around the front door opening or they will spill out, or they can pack into the gasket channel and prevent proper sealing. To remove ashes, use a fireplace shovel. Avoid removing large live coals by pushing them to the side and removing only the finer ash with a shovel.

Disposal of ashes - Ashes should be placed directly into a **metal** container with a tight fitting lid. Do not place any other items or trash into the metal container. Do not pour water into the container. Replace the container's lid and allow the ashes to cool. Never place the ash disposal container on a combustible surface or vinyl flooring, as the container could be **hot!**

Pending disposal, place the closed ash container on a noncombustible floor or on the ground outside, well away from all combustible materials, liquid fuels, or vehicles. Retain ashes in the closed container until all coals thoroughly cool.

If the ashes are disposed of by burial in soil or otherwise locally dispersed, they should be retained in the closed container until all cinders have thoroughly cooled.

NEVER place ashes in wooden or plastic containers, in trashcans with other trash, or in paper or plastic bags, no matter how long the fire has been out. Coals within a bed of ashes can remain hot for several days once removed from the firebox.

MAINTENANCE

CATALYTIC COMBUSTOR INSPECTION AND REPLACEMENT PROCEDURES

- **WARNING: THIS WOOD HEATER CONTAINS A CATALYTIC COMBUSTOR, WHICH NEEDS PERIODIC INSPECTION AND REPLACEMENT FOR PROPER OPERATION. IT IS AGAINST FEDERAL REGULATIONS TO OPERATE THIS WOOD HEATER IN A MANNER INCONSISTENT WITH OPERATING INSTRUCTIONS IN THIS MANUAL, OR IF THE CATALYTIC ELEMENT IS DEACTIVATED OR REMOVED**

It is important to periodically monitor the operation of the catalytic combustor to ensure that it is functioning properly and to determine when it needs to be replaced. A non-functioning combustor will result in a loss of heating efficiency, and an increase in creosote and emissions. Following is a list of items that should be checked on a periodic basis

-Combustors should be visually inspected at least three times during the heating season to determine if physical degradation has occurred. Actual removal of the combustor is not recommended unless more detailed inspection is warranted because of decreased performance. If any of these conditions exists, refer to Catalyst Troubleshooting section of this owner's manual.

-This catalytic (or hybrid) heater is equipped with a thermometer to monitor catalyst operation. Properly functioning combustors typically maintain temperatures in excess of 500 °F, and often reach temperatures in excess of 1,000 °F. If catalyst temperatures are not in excess of 500 °F, refer to the Catalyst Troubleshooting section of this owner's manual.

-You can get an indication of whether the catalysts are working by comparing the amount of smoke leaving the chimney when the smoke is going through the combustor and catalysts light-off has been achieved, to the amount of smoke leaving the chimney when the smoke is not routed through the combustor (bypass mode).

1. Light stove in accordance with operator's instructions
2. With smoke routed through the catalysts, go outside and observe the emissions leaving the chimney.
3. Engage the bypass mechanism and again observe the emissions leaving the chimney. Significantly more smoke will be seen when the exhaust is not routed through the combustor (bypass mode)

INSPECTING THE CATALYSTS AND REMOVING/REPLACING THE BAFFLE

1. Allow the stove and ashes to fully cool.
2. Remove the metal baffle protector by sliding it to the left or right, and then rotating it towards you.
3. Lift up on the right side baffle, and gently pull the left side baffle down and out of the stove

CAUTION - Do not force the baffle pieces. Gently adjust the baffle orientation until each side can be removed freely from the stove.

Figure 16 - Removing/Replacing the Baffle for Inspection

Figure 16 (cont.) - Removing/Replacing the Baffle for Inspection

4. Use a small vacuum nozzle or soft bristled brush to remove any accumulated ash or stoot on the face of the catalysts.
5. Inspect the catalysts for any unusual warping, corrosion, or plugged openings.
6. If any unusual conditions are found, remove the catalyst blocks – See replacing the catalysts.
7. Replace the baffles and baffle protector. Installation is the opposite of removal.
8. Ensure that the baffle pieces are pushed together at the center joint.

REMOVING OR REPLACING THE CATALYSTS

Refer to the Catalytic combustor warranty on page 35 for catalyst replacement information. DO NOT OPERATE UNIT WHITOUT CATALYSTS. Only remove the catalysts if required. In general, the less you handle the catalysts, the better. If any unusual conditions are found, remove the catalyst blocks

1. Allow the stove and ashes to fully cool.
2. Loosen, but do not remove the screws securing the rear heatshield. (If stove is so equipped).

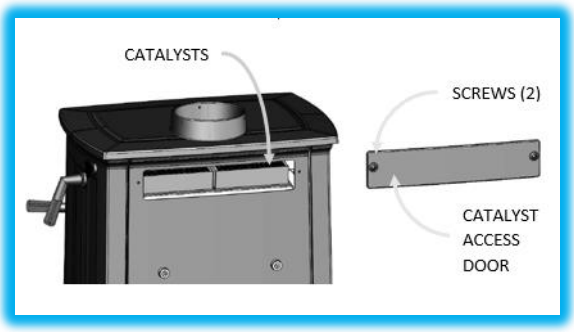

Figure 17 – Catalyst Access Door

3. Remove the heat shield by sliding the screw heads through the slots in the heatshield.
4. Remove the 2 bolts securing the cast iron catalyst access cover, and remove the cover.
5. Inspect the catalysts for visible damage or fly ash. If fly ash exists, gently brush the catalysts off with a narrow soft-bristle brush, or vacuum with a crevice tool.
6. If fly ash exists, or if there are suspected catalyst performance issues, fully remove the catalysts by gently pulling upwards from the ribs in the cast iron, and then pulling outwards through the catalyst access opening.
7. Remove any remaining gasket material from the opening and from the catalysts.
8. Inspect the catalysts for any fly ash or clogging, and remove with a soft bristled brush or vacuum crevice tool. If extra cleaning is needed, follow the guidelines below:
   - -You may use compressed air under 35 psi, air only, no chemicals.
   - -You may soak the catalysts in a hot water mix (not boiling), 4 parts water, 1 part vinegar. Rinse with cold water until vinegar smell is mostly gone.
   - -No metal tools such as gun cleaners should be used.
   - -No detergents or chemicals.

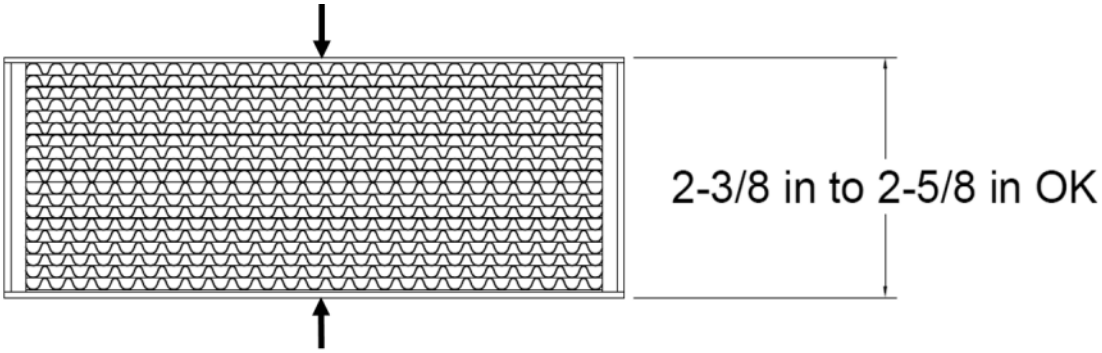

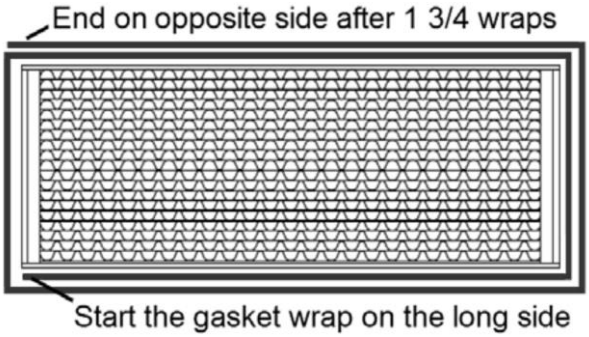

Figure 18 - Acceptable Ca

9. Some warping or bowing of the catalysts over time is acceptable, as long as the catalyst gasket continues to seal. Measure the catalysts in the middle section – if the dimensions are outside the range shown in Figure 18, replace the catalysts.
10. Beginning at one corner, re-install fiberglass gasket material on the catalysts.

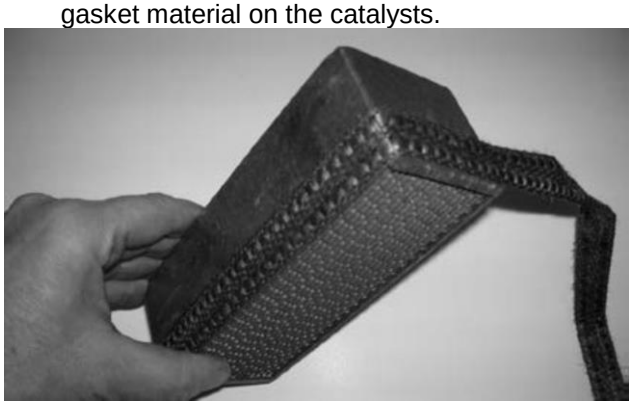

11. Wrap the gasket tape around the catalysts so it is reasonably tight. Double layer the material on three sides of the individual catalyst cartridges as shown in the following picture.

12. Once the gasket is installed on the catalysts, gently push the catalysts into the catalyst opening until the catalysts hit against the back wall of the cavity. Take care to ensure the gasket is not damaged and position the two cartridges so that the single layer gasket edges touch one another in the center. Replace the catalyst access door.

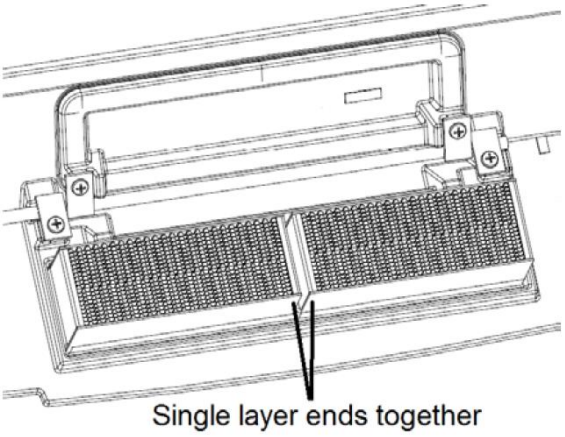

13. Replace catalyst access door.
14. Heat the stove slowly during your next fire to allow the Interam gasket to fully expand and seal the catalysts.

REPLACING THE REFRACTORY STONE AND SECONDARY RISER ASSEMBLY

1. Allow the stove and ashes to fully cool.
2. Open the front door of the stove and fully clean any ash in the firebox
3. Remove the baffle following the instructions in “Inspecting the Catalysts and Removing/Replacing the baffle.
4. Remove the side stones one at a time by tipping them towards the inside of the firebox from the top.
5. With side stones and baffle removed, the secondary riser assembly and rear stones can be lifted up and out of the stove.
6. Installation is the reverse of disassembly. Make sure that the secondary riser tube is seated in the pocket at the rear of the bottom casting.

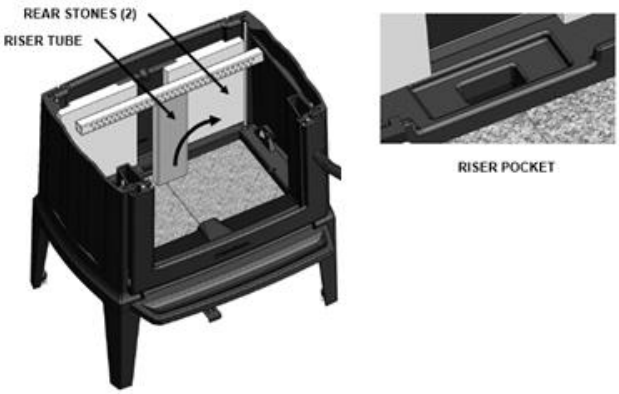

Figure 19 - Removing Riser and Rear Stones

GLASS REPLACEMENT PROCEDURES

- **WARNING: DO NOT OPERATE THIS APPLIANCE WITH THE GLASS PANEL REMOVED, CRACKED, OR BROKEN. DO NOT SUBJECT THE DOOR TO ABUSE, SUCH AS STRIKING OR SLAMMING SHUT. ONLY A QUALIFIED SERVICE PERSON SHOULD REPLACE THE GLASS PANEL.**

1. Follow the instructions included with the replacement glass kit.
2. Remove the door.
3. Remove the screws from the glass clips (use penetrating oil if necessary) – Set aside for reinstallation.
4. Carefully lift the damaged glass off the door and discard.
5. Remove any remaining glass and old gasket material.
6. Clean the screw holes and place a small amount of anti-seize compound in each one.
7. Install a new glass gasket in the glass gasket groove.
8. Place the new glass onto the door.
9. **Important! Center the glass** and ensure that the edges of the glass are parallel with the edges of the opening.
10. Check glass position again (centered, and parallel), then screw the glass retainer clips with the glass pads back on the door using a crisscross pattern. Tighten the screws no more than 1/8th of a turn after they seat. The glass will break at this point if not positioned correctly.
11. Apply a light film of anti-seize lubricant on the door’s hinge pins if needed.
12. Install the door.
13. After 5 or 6 fires, check the glass retainer screws, and retighten if necessary.

Required Glass Kit: Part Number: 96-58405. Use only 4mm x 329mm x 395mm Ceramic, or Neoceram glass. Contact your Hearthstone dealer.

of the secondary combustion system that minimizes

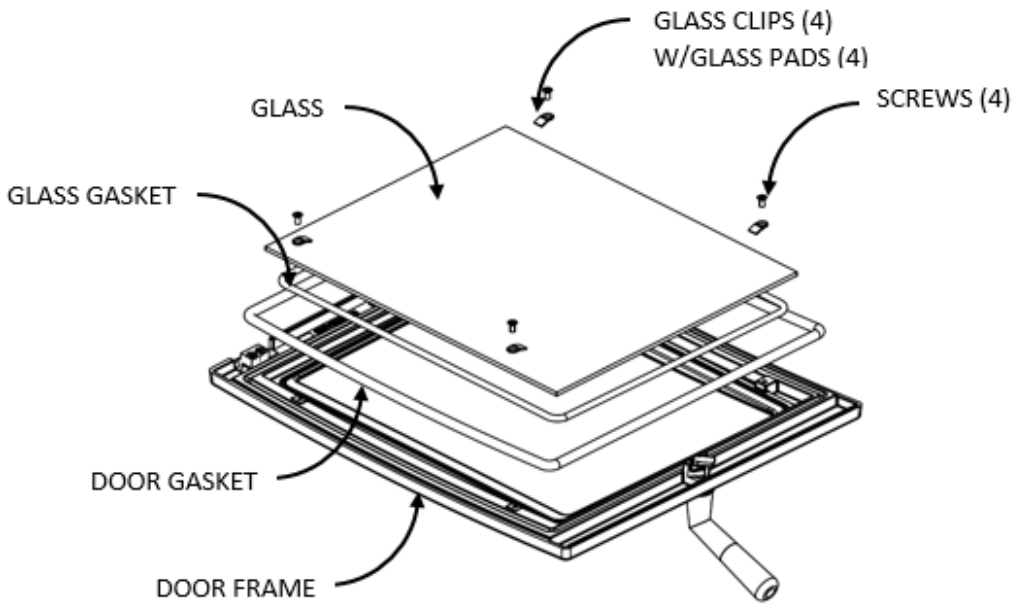

Figure 20: Front Door assembly

CREOSOTE FORMATION & REMOVAL

When wood burns slowly at low temperatures, it may produce tar and other organic vapors, which combine with expelled moisture to form creosote. These creosote vapors condense in the relatively cool chimney flue of a slow-burning fire. As a result, creosote residue accumulates on the flue lining. When ignited, this creosote makes an extremely hot fire, which may damage the chimney or even destroy the house. When burning wood, inspect the chimney connector and chimney at least once every two months during the heating season to determine if there is a creosote buildup.
If a creosote build-up occurs, inspect the stovepipe connector and chimney more often, at least monthly during the heating season to monitor the accumulation. If a creosote residue greater that 1/4" (6 mm) accumulates, remove it to reduce the risk of a chimney fire.

PREVENTION

Burn the stove with the primary air control fully open for 35 - 45 minutes daily to burn out creosote deposits from within the stove and the venting system.

After reloading with wood, burn the stove with the primary air control fully open for 15 to 20 minutes. This manner of operation ensures early engagement creosote buildup in the chimney.

If your glass always remains dirty, your operating temperatures are too low or your wood is wet; therefore, there is a higher risk of creosote buildup.

Inspect the venting system at the stove connection *and* at the chimney top. Cooler surfaces tend to build creosote deposits faster, so it is important to check the chimney at the top (where it is coolest) as well as from the bottom near the stove.

CLEANING

Remove accumulated creosote with a cleaning brush specifically designed for the type of chimney in use. We recommend you use a certified chimney sweep to perform this service. Contact your dealer for the name of a certified chimney sweep in your area (your dealer may be a certified sweep!).

We recommend that before each heating season you have the entire system professionally inspected, cleaned and repaired, if necessary.

GASKETS

Replace door gasket material every two to three seasons, or whenever it becomes deteriorated or loose, depending on stove use. If the door seal leaks, a new gasket will ensure a tight seal and improve stove performance.

We recommend you only use Hearthstone replacement gaskets when you need to replace your door gasket. Contact your dealer for a gasket kit that includes instructions, and the gasket for your stove.

GLASS

The glass used in our stoves is actually not plain glass, but a tough, clear ceramic material capable of operating at temperatures up to 2300° F. Do not operate the stove with a broken door glass. Do not abuse the front door by striking or slamming.

When necessary, clean the glass. For the inside surface of the glass, we recommend using a damp paper towel dipped in gray ash. Rub the inside of the glass with a circular motion. When all the deposits are removed, clean up with window cleaner or with commercial stove glass cleaners, which are available from your local dealer. Use this type of cleaner for the outside surface as well. Never attempt to clean the glass while the fire is burning or while the glass is hot. Remove deposits by following the instructions provided with the cleaner. Wipe the cleaner off with a soft cloth, or black & white newsprint.

> **Important:** scratching or etching the glass will weaken the integrity of the glass. Do not use a razor blade, steel wool, or any other abrasive material to clean the glass. Use a cleaner specifically manufactured for woodstoves only.

The front door glass is a ceramic, thermal shock-resistant glass, made specifically for use in woodstoves. Do not use any replacement glass other than the ceramic glass manufactured and supplied for use in this woodstove. Replacement glass is available through your local dealer.

Replace the door glass immediately if broken or chipped. Contact your local dealer for replacement glass. The glass kit includes instructions and everything needed for the repair. If you replace the glass yourself, wear work gloves and safety glasses.

Required Glass Kit: PN: 96-58405.

TROUBLESHOOTING

COMMON ISSUES

Virtually all woodstove operators experience basic common problems at one time or another. Most are correctable and generally require only a minor adjustment of the stove, installation, or operating technique. In cases where weather conditions dramatically affect stove performance, the problems are typically temporary and solve themselves once the weather changes.

If you question whether your stove is producing adequate heat, the best way to troubleshoot the problem is to monitor the temperature of the stack no more than 12 inches (30 cm) above the flue collar. A 400° F (200° C) stovepipe confirms the stove is supplying sufficient heat. Keep in mind that your house itself will regulate room/house temperatures. How well the walls, floors and ceilings are insulated, the number and size of windows, the tightness of outside doors, and the construction or style of your house (vaulted ceilings or other open spaces which collect large percentages of heat, ceiling fans, etc.) all are determining factors of room temperature.

Your stove's performance is also dependent on its installation. One common cause of poor performance is an oversized chimney flue. Oversized chimney flues result in decreased draft, which prevents the smoke from rising out the chimney. Oversized flues are also more difficult to heat effectively, especially when burning a high efficiency stove. Cool flue temperatures inhibit the establishment of a strong draft (and encourage the accumulation of creosote). The lack of a strong draft will cause the fire to die down and may even force smoke to pour into the room.

If your chimney is the proper size and a strong draft is not easily established, there is the possibility that the chimney is too cold. Again, hot chimneys promote stronger drafts. Opening a window briefly in the room while lighting the stove may help.

Other draft guidelines are as follows:

An **"AIRTIGHT" HOUSE:** The air supply (infiltration) to the interior of the house may be inadequate if your home is super-insulated or especially well sealed. This phenomenon of air starvation within the building is exacerbated if exhaust fans, such as clothes dryers, bathroom fans or cook stove exhaust fans, are in operation within the home. Outfitting your stove with the optional outside air adaptor connected to an air duct, which leads to the outside of the building, can correct this problem.

Tall Trees or Buildings: These obstructions, when located close to the top of the chimney can cause chronic or occasional downdrafts. When selecting a site for a new chimney, consider the placement of other objects near the proposed chimney location.

Wind Velocity: Generally, the stronger and steadier a wind, the stronger (better) the draft. However, "gusty" wind conditions can cause erratic downdrafts. For consistent problems, consider a high wind cap, such as the Vacu-Stack.

Barometric Pressure: Chimney drafts are typically sluggish on balmy, wet or muggy days (low barometric pressure). This is a weather-related phenomenon, which generally is self-correcting as the weather changes.

Briskness of Fire: The hotter the fire in your stove, the hotter your chimney and, therefore, the stronger the draft.

Breaks in the Venting System: An unsealed clean-out door at the bottom of the chimney, leaky stovepipe joints, a poor stovepipe-to-thimble connection, missing caps, or a leaky chimney all can cause inadequate draft.

Seasonal Factors: Early fall and late spring are generally difficult seasons in which to establish proper drafts. The colder the outside air is relative to room temperature, the stronger the draft.

OPERATING THE STOVE

As outlined above, there are days when a good draft is just not easy to establish. The causes are usually seasonal factors or a cold chimney. Try starting the fire by using small kindling and fuel to obtain a quick, hot fire. Tend the fire frequently with small fuel until the chimney is hot and the draft is well established. Sometimes, partially opening a first floor window briefly will help quickly get draft established.

TROUBLESHOOTING GUIDE

PROBLEM	POSSIBLE CAUSE	SOLUTIONS
STOVE SMOKES	Operating Technique	Fully open the primary air control one minute before opening doors, and ensure the bypass is open before opening door.
	Cold Chimney or reverse draft	Preheat the chimney when first starting a fire. Briefly open a window in the room containing the stove.
	Blocked Chimney	Examine the chimney and stovepipe for blockage or creosote accumulations.
	Oversized Chimney	Reline the chimney to the appropriate diameter
	Undersized Chimney	Install a draft inducer or replace the chimney.
	Chimney Too Short	Lengthen the chimney.
	Air Infiltration Into The Chimney	Seal chimney connections and openings. Check clean-out doors.
	Bypass not closed	Ensure that the bypass door is closed when the catalysts are in the active range.
	Catalysts not functioning	Inspect catalysts for damage, ash build-up, or plugging. Brush catalysts with a soft-bristled brush, or vacuum lightly. Replace if required. Follow instructions to ensure catalyst light-off.
	Not burning proper fuel	Ensure cordwood is seasoned and dry.
	More Than One Appliance Connected to the Flue	Disconnect all other appliances and seal openings.
BACK-PUFFING OR GAS EXPLOSIONS	Operating Technique	Fully open the primary air control one minute before opening the door and keep it fully open for a few minutes after reloading. Ensure the bypass door is open before opening the door
	Extra Low Burn Rate	Burn the stove at a higher burn rate.
	Chimney Down-draft	Install a chimney cap.
	Excessive Ash Build-up	Empty the ash pan more frequently. Increase efficiency of burns, and avoid using poor quality or green wood.
UNCONTROLL-ED OR SHORT BURN	Unsealed or Open Door	Close the door tightly or replace the gaskets. Air leakage around glass gasket – replace gasket
	Excessive Draft	Check the installation. Operate at LOW BURN. Install stovepipe damper. Draft in excess of 0.1 wc should be corrected with a stovepipe damper(s)
	Extra Long Chimney	Shorten the chimney. Install stovepipe damper(s).
	Oversized Chimney	Reline the chimney to the proper diameter.
	High Winds or Hilltop Location:	Install a chimney cap.
INSUFFICIENT HEAT	Poor Quality, low Btu content, or Green Wood	Use only air-dried wood, preferably dried at least one year. Use a wood with a high Btu content if available.
	Low Burn Rate	Operate the stove at a higher burn rate.
	Cold Exterior Chimney	Reline or insulate the chimney.
	Leaky Stovepipe or Chimney	Check the installation. Replace with a pre-fabricated insulated chimney system or a properly sized masonry chimney.
	Too Much Heat Loss From House	Add insulation, use energy efficient windows, or caulk windows, and seal openings in home.
	Excessive Ash Build-up	Empty the ash pan more frequently. Increase efficiency of burns, and avoid using poor quality or green wood.
BLISTERING OF FINISH	Operating Technique	Do not over-fire the stove. Monitor stove temperatures. Use seasoned wood only.
	Excessive Draft	Check the DRAFT. A damper may be required. Operate the stove at a LOW BURN range.

ADDITIONAL CATALYST TROUBLESHOOTING GUIDE

PROBLEM	POSSIBLE CAUSE	SOLUTIONS
FLY ASH BUILD UP ON CATALYSTS	Catalysts have not maintained light-off temperature	Brush cold combustor with soft-bristled brush or vacuum lightly. Follow instructions in the manual for a proper catalyst light-off
	Burning materials that cause a lot of char and fly-ash	Don't burn cardboard, gift wrap paper, or garbage. Burn only dry, seasoned wood, per the owner's manual.
	Bypass closed too soon	Follow instructions in the manual for a proper catalyst light-off
CATALYSTS PLUGGING OR MASKING (SOOT/CRESO-TE)	Burning wet, pitchy woods, or burning large loads of small diameter wood with the combustor in the operating position without catalyst light off occurring	Burn dry seasoned wood. Follow instructions in the manual for a proper catalyst light-off, and ensure catalyst light-off as occurred before closing bypass damper. It may be possible to burn the soot or creosote off by building a hot fire, and allowing the stove to run until the catalysts are well within the operating range before closing the bypass. Continue to run the stove at a high temperature for one hour, while ensuring the catalysts stay in the upper operating range, but not too hot.
WARPING OR BOWING OF THE CATALYSTS	Excessive catalyst temperatures for long periods of time.	Ensure that the catalysts remain in the operating zone, and does not get to hot. Reduce air control settings for a lower burn rate to ensure catalyst temperatures do not exceed the operating range.

REPLACEMENT PARTS & OPTIONAL ACCESSORIES

PART #	DESCRIPTION
	REPLACEMENT PARTS
5640-002	BOTTOM HEAT SHIELD
5640-008	HINGE PIN
5640-009	HINGE BLOCK
5640-010	SECONDARY AIR RISER ASSEMBLY
5640-012	TIE ROD
5640-016	BAFFLE GUARD
5640-018	BYPASS ROD RETAINER
5640-020	LATCH STRIKER PLATE
5640-022	DOOR LATCH
5640-024	REAR SHIELD (INCLUDED)
7200-520	CATALYST THERMOMETER
	REPLACEMENT KITS AND ACCESSORIES
96-53400	OUTSIDE AIR KIT
96-58400	GASKET KIT
96-58405	GLASS KIT
96-71400	HANDLE KIT
96-73400	FRONT DOOR LATCH KIT
96-75400	CATALYST REPLACEMENT KIT
96-76400	BAFFLE KIT
96-57400	BLOWER KIT

Refer to the Illustrated Parts list for further detail about stove components, available online at www.hearthstonestoves.com.

SAFETY LABEL

CONTACT YOUR LOCAL BUILDING OFFICIALS ABOUT
RESTRICTIONS AND INSTALLATION INSPECTION IN YOUR AREA

Listed Room Heater, Solid Fuel Type
Also Suitable for Mobile Home Installation Pursuant to (UM)84-HUD

Conforms to UL STD 1482
Certified to ULC STD S627

Manufactured by:
LOGO.PNG
317 Stafford Ave.
Morrisville, VT 05661

MODEL NAME:
CRAFTSBURY 2
MODEL NUMBER: 8392
SERIAL NUMBER:
[redacted]

CAUTION: HOT WHILE IN OPERATION. DO NOT TOUCH. KEEP CHILDREN, CLOTHING, AND FURNITURE AWAY. CONTACT MAY CAUSE SKIN BURNS. SEE NAMEPLATE AND INSTRUCTIONS. INSPECT AND CLEAN CHIMNEY AND CONNECTOR FREQUENTLY. UNDER CERTAIN CONDITIONS OF USE, CREOSOTE BUILDUP MAY OCCUR RAPIDLY.

WARNINGS

Do not use grate or elevate fire. Build wood fire directly on hearth. Do not overfire. If the heater or chimney connector glows, you are overfiring. (See Operator's Manual)

OPERATE ONLY WITH DOORS CLOSED. DO NOT OBSTRUCT SPACE UNDER HEATER.
TYPE OF FUEL: CORD WOOD ONLY - BURNING FUELS OTHER THAN CORDWOOD MAY DAMAGE THE APPLIANCE

"PREVENT HOUSE FIRES"

Install and use only in accordance with manufacturer's installation instructions and your local building codes.

CAUTION: Special methods are required when passing chimney through a wall or ceiling, refer to local building codes. Do not connect this unit to a chimney flue serving another appliance.

NOTE: Replace glass only with 4mm ceramic glass.

This wood heater needs periodic inspection and repair for proper operation. Consult the owner's manual for further information.
It is against federal regulations to operate this wood heater in a manner inconsistent with the operating instructions in the owner's manual.

WARNING: (Mobile Home) An outside air inlet must be provided for combustion and be unrestricted while the unit is in use.

THIS APPLIANCE USES A CATALYTIC COMBUSTOR (P/N WF-41500001078)
The performance of the catalytic device or its durability has not been evaluated as part of the certification
CAUTION: Burning materials other than the specified fuels may make the catalyst inactive

Minimum Clearance to Combustible Materials*

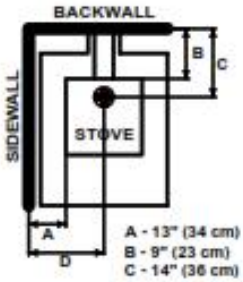

A - 13" (34 cm)
B - 9" (23 cm)
C - 14" (36 cm)
D - 24.5" (63cm)

Floor Protection*

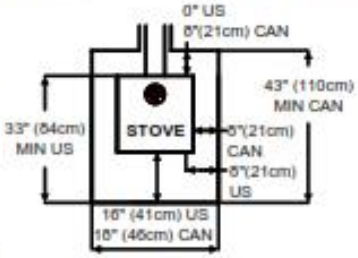

When installed on a combustible floor, non-combustible floor protection is required to cover the area beneath the heater, and extend at least 18"(41cm) [18" (46cm) CAN] to the front and 8"(21cm) beyond each side of the fuel loading and ash removal openings [side of stove in CAN], the floor protection must extend under the flue connector and extend 2" beyond each side of pipe.

VENT REQUIREMENTS: 6" diameter, single wall, minimum 24 MSG blue steel connector with listed factory-built Type HT chimney or masonry chimney.

OPTIONAL COMPONENTS:
Outside Air Kit Part # 96-53400
Blower Kit Part # 96-57400

*Refer to the installation Manual for additional clearance information, installation instructions, and operating instructions.

U.S. ENVIRONMENTAL PROTECTION AGENCY
Particulate Emissions: 1.87 g/hr. Tested to: EPA Method 28R
Certified to comply with 2020 crib wood particulate emission standards.

Date of Manufacture

DO NOT REMOVE OR COVER THIS LABEL MADE IN USA 3300-750

LIMITED WARRANTY

These warranties give you specific legal rights. You may also have other rights, which vary from State to State.

Hearthstone Quality Home Heating Products, Inc. (Hearthstone) warrants to the original retail purchaser only (the "Original Purchaser") the new appliance manufactured by Hearthstone, purchased by the Original Purchaser and installed by an authorized Hearthstone dealer or their designated representative against any of the occurrences listed in this document that result from defects in material or workmanship. This warranty is not transferrable. All obligations of Hearthstone under this document commence on the date of the Original Invoice (the "Purchase Date"). The term "Limited Lifetime" is defined as 10 years from the beginning of warranty coverage.
Hearthstone appliances are designed to be operated only with the fuels listed in your owner's manual.

Catalytic combustor LIMITED LIFETIME WARRANTY: The catalytic combustors are covered directly by the combustor manufacturer, Applied Ceramics. Included with your stove you will find the LIMITED LIFETIME WARRANTY for the catalysts, as well as a warranty card.

Catalyst Model Number: ACI-6M2 Catalyst Manufacturer: APPLIED CERAMICS

APPLIED CERAMICS warrants to the consumer who purchases a FIRECAT STEEL COMBUSTOR as a component in an EPA certified solid fuel appliance, to replace at no charge to the consumer the FIRECAT STEEL COMBUSTOR that ceases to function with two (2) years from the date of purchase by the original consumer, provided that the following conditions are met:

(1) A copy of the original bill of sale that includes place and date of purchase must be submitted with the warranty claim.
(2) The original FIRECAT STEEL COMBUSTOR must be returned to APPLIED CERAMICS
(3) The FIRECAT STEEL COMBUSTOR must not have been mechanically abused, nor must the wrong fuels have been used in the appliance.

If after two years the FIRECAT STEEL COMBUSTOR fails to function, the prorated warranty will allow replacement at the following special price schedule:

Year 3	$130.00
Year 4	$140.00
Year 5	$150.00
Year 6	$160.00
Year 7	and after at current retail price

Conditions 1, 2, and 3 also apply to the Prorated portion of the warranty. Any EPA certified solid fuel appliance will receive one replacement catalyst for each defective catalyst returned during the three year period. The consumer will be responsible for any removal, any servicing, and return of any items required for filing the warranty claim. This warranty is APPLIED CERAMIC'S exclusive warranty, and APPLIED CERAMICS, disclaims any other express or implied warranty for the FIRECAT STEEL COMBUSTOR, including any warranty or merchantability fitness for a particular use.

Ensure the catalyst is well wrapped and padded for shipment in bubble wrap, or similar material. Ship the catalyst with padding inside of a cardboard box.

All warranty claims must include $12.50 for postage and handling within the continental U.S. Alaska and Canada claims must include $35.00.

Please allow 2-3 weeks for delivery. Order online @ www.firecatcombustors.com

Please read and understand the full warranty. Please return the completed warranty card promptly to Applied Ceramics. The warranty card, and any warranty claims can be shipped to:
Applied Ceramics
55555 Pleasantdale Road
Doraville, GA, 30340

Stove components Limited Warranty

Warranty Period	Wood	Gas	Pellet	Covered Components
Limited Lifetime	X	X	X	Stone
	X	X	X	Cast iron not listed elsewhere
	X			Clean burning air supply system*
5 Year	X	X	X	Door handles and latches
	X	X	X	Steel Components and Firebox
		X		Burner and logs
3 Year			X	Burn Pot and Baffles
2 Year	X	X	X	Appliance Electrical and Gas Components
	X	X		Refractory, Vermiculite Panels, Baffles
1 Year	X	X	X	Enamel finish against peeling or fading
	X	X	X	Accessories
	X	X	X	Glass
	X			Ash Grate
	X	X	X	All components not listed elsewhere

Any parts repaired or replaced during the limited warranty period will be warranted under the terms of the limited warranty for a period not to exceed the remaining term of the original limited warranty or one year, whichever is longer.
Parts: Hearthstone will replace through an authorized dealer, defective parts covered by the foregoing warranty at no charge.
Labor: Within the first (1st) year after the Purchase Date, Hearthstone will pay for warranty labor performed by an authorized Dealer at Hearthstone's published labor rates in effect at the time the labor is performed only if the appliance is installed by an authorized dealer or their designated representative. Otherwise or thereafter, the Original Purchaser is responsible for the cost of labor.
Shipping cost for parts: Within the first ninety (90) days after the Purchase Date, Hearthstone will pay for the shipping of appliance parts covered by any of the foregoing warranties to and from Hearthstone or an authorized Dealer, as the case may be. Thereafter, the Original Purchaser is responsible for all shipping costs related to shipping appliance parts to and from Hearthstone or an authorized Dealer, as the case may be.
Shipping cost for the appliance: Within the first (1st) year after the Purchase Date, if the Original Purchaser is instructed to return the appliance to Hearthstone or an authorized Dealer for repair, Hearthstone will pay fifty percent (50%) and the Original Purchaser will pay fifty percent (50%) of the shipping costs related to shipping the appliance to and from Hearthstone or an authorized Dealer, as the case may be. Thereafter, the Original Purchaser is responsible for one hundred percent (100%) of all of the shipping costs related to shipping the appliance to and from Hearthstone or an authorized Dealer, as the case may be. Notwithstanding any other provision of this document, in no event will Hearthstone pay for any Dealer fees or other fees for pick up or delivery of the appliance returned for repair; the Original Purchaser shall be responsible for any such fees.

EXCLUSIONS & CONDITIONS
The warranties contained in this document do not cover, nor is Hearthstone responsible for:

1. Damages resulting from:
    a. Failure to install, operate, or maintain the appliance in accordance with the owner's manual, operating instructions, installation instructions, or safety rating label provided with the appliance.
    b. Over-firing the appliance. Over-firing can be identified by, but not limited to, warped cast iron or steel, rust colored cast iron, bubbling, cracking and discoloration of steel or enamel finishes.
    c. Failure to install the appliance in accordance with all national or local building codes.
    d. Shipping or improper handling.
    e. Improper operation, abuse, misuse, continued operation with damaged, corroded, or failed components, accident, or improper/incorrect service or repairs.
    f. Environmental conditions, inadequate ventilation, negative pressure, or improper drafting caused by tightly sealed constructions, insufficient make-up air supply, or air handling devices such as exhaust fans, forced air furnaces, or other such causes.
    g. Damage caused by direct exposure to water.
    h. Use of fuels other than those specified in the owner's manual.
    I. Installation or use of components not supplied with the appliance, or any other components not expressly authorized and approved by Hearthstone.
    J. Modifications of the appliance not expressly authorized and approved by Hearthstone in writing
    K. Interruptions or fluctuations of electrical power supplied to the appliance.
2. All stones are warranted against cracking or breakage due to thermal stress, excluding surface and hairline cracks and scratches that do not affect the operation, or safety of the appliance.
3. Repair or replacement of wear parts. Such parts that are subject to normal wear and tear during the warranty period such as paint, gaskets, baffles, refractory materials, ash grates, and glass.
4. Damage resulting from installation, modification, alteration, repair or service of the appliance by any party other than an authorized Hearthstone dealer (a "Dealer") or their designated representative, or Hearthstone.
5. Damage due to water or condensation due to installation of the appliance in a high moisture area.
6. Damage due to installation of the appliance in an atmosphere contaminated by damaging chemicals, including but not limited to chlorine, fluorine or salts.
7. Scratches on glass, enameled surfaces or stones due to mechanical abrasion.
8. Noise caused by expansion or contraction caused by the heating and cooling of the appliance.
9. Odors caused by the heating of the appliance, or surrounding materials
10. Consequential damage caused by leaking of condensate during startup
11. A defect in any part of the appliance if the Original Purchaser fails to comply with Hearthstone's or a Dealer's request to ship the part or the appliance to Hearthstone or a Dealer, as the case may be.
12. Replacement stones and enameled parts are taken from current stock, and may not match originals in color, grain, or pattern. Hearthstone will supply replacement parts for discontinued parts in finishes or colors as available, or at their discretion.
13. Hearthstone's obligation under this warranty does not extend to the appliance's ability to heat the desired space. Information is provided to assist the customer and the dealer in selecting the appropriate appliance for the application. Consideration must be given to appliance location and configuration, environmental conditions, insulation and air tightness of the structure.

THE WARRANTIES CONTAINED IN THIS DOCUMENT ARE EXCLUSIVE AND ARE GIVEN BY HEARTHSTONE AND ACCEPTED BY THE ORIGINAL PURCHASER IN LIEU OF ALL OTHER EXPRESS WARRANTIES AND ANY OBLIGATIONS, LIABILITIES, RIGHTS, CLAIMS, OR REMEDIES IN CONTRACT OR TORT, WHETHER OR NOT ARISING FROM HEARTHSTONE'S NEGLIGENCE, ACTUAL OR IMPUTED. ALL IMPLIED WARRANTIES, INCLUDING THE WARRANTIES OF MERCHANTABILITY AND FITNESS FOR A PARTICULAR PURPOSE, ARE GIVEN ONLY TO THE EXTENT REQUIRED BY FEDERAL OR STATE LAW. EXCEPT AS OTHERWISE REQUIRED BY STATE LAW, UPON THE EXPIRATION OF THE EXPRESS LIMITED WARRANTIES CONTAINED HEREIN, NO IMPLIED WARRANTIES, INCLUDING THE IMPLIED WARRANTIES OF MERCHANTABILITY OR FITNESS FOR A PARTICULAR PURPOSE, SHALL APPLY TO THE SUBJECT APPLIANCE. SOME STATES DO NOT ALLOW LIMITATIONS ON HOW LONG AN IMPLIED WARRANTY LASTS, SO THE ABOVE LIMITATION MAY NOT APPLY TO YOU.

THE WARRANTIES CONTAINED IN THIS DOCUMENT EXTEND ONLY TO THE ORIGINAL PURCHASER OF THE APPLIANCE WARRANTED HEREUNDER. THEY ARE NOT TRANSFERRABLE AND DO NOT EXTEND TO ANY SUBSEQUENT OWNERS.

UNDER NO CIRCUMSTANCES SHALL HEARTHSTONE BE LIABLE TO THE ORIGINAL PURCHASER OR ANY OTHER PERSON FOR ANY INCIDENTAL OR CONSEQUENTIAL DAMAGES, INCLUDING BUT NOT LIMITED TO DAMAGE TO PROPERTY OR PERSONAL INJURIES, WHETHER ARISING OUT OF LOSS OF USE, BREACH OF WARRANTY, TORT, OR OTHERWISE, EVEN IF HEARTHSTONE HAS BEEN APPRAISED OF THE POSSIBILITY OF SUCH DAMAGES. SOME STATES DO NOT ALLOW THE EXCLUSION OR LIMITATION OF INCIDENTAL OR CONSEQUENTIAL DAMAGES, SO THE ABOVE LIMITATION OR EXCLUSION MAY NOT APPLY TO YOU.

QUALIFYING FOR WARRANTY COVERAGE

To obtain performance of any obligation under this document, the Original Purchaser must, within the applicable warranty time period, contact their original Hearthstone dealer, or the current responsible local Hearthstone dealer, for instructions regarding the return of defective parts for repair, the return of the appliance for repair, or to schedule a Dealer service call. The Original Purchaser should refer to the Dealer Network search engine contained on Hearthstone's Web site (www.hearthstonestoves.com) if the original dealer is not available, to find a Hearthstone dealer nearest to the Original Purchaser's location.

REMEDY

The remedy for any breach of the foregoing warranties will consist of repair or replacement, at Hearthstone's option, of any covered defect in the appliance. When the Original Purchaser contacts a Hearthstone Dealer, the Dealer on behalf of Hearthstone, as the case may be, will instruct the Original Purchaser to either return the defective part, or the entire appliance (if requested), to the Dealer or Hearthstone or allow a Dealer to make a service call at the place where the appliance is located. Hearthstone may require that a digital picture be provided to support the claim. Notwithstanding any other provision of this document, the Original Purchaser shall pay for any fees and service charges related to a Dealer's service call or the shipping charges associated with the return.

WARRANTY REGISTRATION

The Original Purchaser can complete their warranty registration on our website at www.hearthstonestoves.com, or send a completed and signed Warranty Registration Form, which is enclosed in the appliance document packet, to the following address:

Hearthstone Quality Home Heating Products, Inc.
Warranty Department
317 Stafford Avenue
Morrisville, VT 05661

NOTE: SENDING IN THE SIGNED WARRANTY REGISTRATION FORM IS *NOT REQUIRED* AS A CONDITION OF WARRANTY COVERAGE OR HEARTHSTONE'S PERFORMANCE.

CONTACT YOUR LOCAL BUILDING OFFICIALS ABOUT RESTRICTIONS AND INSTALLATION INSPECTION IN YOUR AREA

Listed Room Heater, Solid Fuel Type
Also Suitable for Mobile Home Installation Pursuant to (UM)84-HUD

8pfs-cu copy.png

Conforms to UL STD 1482
Certified to ULC STD S627

Manufactured by:
LOGO.PNG
317 Stafford Ave.
Morrisville, VT 05661

MODEL NAME:
CRAFTSBURY 2
MODEL NUMBER: 8392
SERIAL NUMBER:
[redacted]

CAUTION: HOT WHILE IN OPERATION. DO NOT TOUCH. KEEP CHILDREN, CLOTHING, AND FURNITURE AWAY. CONTACT MAY CAUSE SKIN BURNS. SEE NAMEPLATE AND INSTRUCTIONS. INSPECT AND CLEAN CHIMNEY AND CONNECTOR FREQUENTLY. UNDER CERTAIN CONDITIONS OF USE, CREOSOTE BUILDUP MAY OCCUR RAPIDLY.

WARNINGS

Do not use grate or elevate fire. Build wood fire directly on hearth. Do not overfire. If the heater or chimney connector glows, you are overfiring. (See Operator's Manual)

OPERATE ONLY WITH DOORS CLOSED. DO NOT OBSTRUCT SPACE UNDER HEATER.
TYPE OF FUEL: CORD WOOD ONLY - BURNING FUELS OTHER THAN CORDWOOD MAY DAMAGE THE APPLIANCE

"PREVENT HOUSE FIRES"

Install and use only in accordance with manufacturer's installation instructions and your local building codes.

CAUTION: Special methods are required when passing chimney through a wall or ceiling, refer to local building codes. Do not connect this unit to a chimney flue serving another appliance.

NOTE: Replace glass only with 4mm ceramic glass.

This wood heater needs periodic inspection and repair for proper operation. Consult the owner's manual for further information. It is against federal regulations to operate this wood heater in a manner inconsistent with the operating instructions in the owner's manual.

WARNING: (Mobile Home) An outside air inlet must be provided for combustion and be unrestricted while the unit is in use.

THIS APPLIANCE USES A CATALYTIC COMBUSTOR (P/N WF-4150001076)
The performance of the catalytic device or its durability has not been evaluated as part of the certification
CAUTION: Burning materials other than the specified fuels may make the catalyst inactive

Minimum Clearance to Combustible Materials*

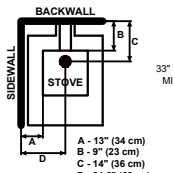

A - 13" (34 cm)
B - 9" (23 cm)
C - 14" (36 cm)
D - 24.5" (63cm)

Floor Protection*

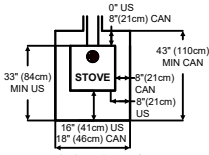

When installed on a combustible floor, non-combustible floor protection is required to cover the area beneath the heater, and extend at least 16"(41cm) [18" (46cm) CAN] to the front and 8"(21cm) beyond each side of the fuel loading and ash removal openings [side of stove in CAN], the floor protection must extend under the flue connector and extend 2" beyond each side of pipe.

VENT REQUIREMENTS: 6" diameter, single wall, minimum 24 MSG blue steel connector with listed factory-built Type HT chimney or masonry chimney.

OPTIONAL COMPONENTS:
Outside Air Kit Part # 96-53400
Blower Kit Part # 96-57400

***Refer to the installation Manual for additional clearance information, installation instructions, and operating instructions.**

U.S. ENVIRONMENTAL PROTECTION AGENCY
Particulate Emissions: 1.07 g/hr. Tested to: EPA Method 28R
Certified to comply with 2020 crib wood particulate emission standards.

Date of Manufacture

DO NOT REMOVE OR COVER THIS LABEL **MADE IN USA** **3300-750**

CONTACTEZ LES AUTORITÉS RESTRICTIONS ET L'INSPECTION LOCALES DES VOTRE INSTALLATION

Poêle à bois recommandé pour chauffage de pièce, utilisant un combustible solide
Convient aussi pour maisons mobiles conformes à la norme (UM)84 HUD

8pfs-cu copy.png

Conforme à UL STD 1482
Certifié selon ULC STD S627

Fabrique par:
LOGO.PNG
317 Stafford Ave.
Morrisville, VT 05661

NOM DU MODELE:
CRAFTSBURY 2
NUMÉRO DE MODÈLE: 8392
NUMÉRO DO SÉRIE:
[redacted]

ATTENTION: CHAUD QUAND IL EST EN MARCHE. NE PAS TOUCHER. TENIR LES ENFANTS, LES VETEMENTS ET MEUBLES ÉLOIGNÉS. LE CONTACT PEUT CAUSER DES BRULURES. VOIR LA PLAQUE SIGNALÉTIGUE ET INSTRUCTIONS. INSPECTER ET NETTOYER FRÉQUEMMENT LA CHEMINÉE ET LE CONDUIT DE RACCORDEMENT. DANS CERTAINES CONDITIONS D'UTILISATION, LE CRÉOSOTE PEUT SE FORMER RAPIDEMENT.

ADVERTISSEMENTS

N'utilisez pas de grille surelevée pour alimenter le feu. Faites le feu directement dans l'âtre. Ne surchauffez pas le poêle. Si le poêle ou la cheminée devient rouge, vous surchauffez. (Voir le manuel de l'opérattueur)

UTILISER SEULEMENT LES PORTES CLOSES. NE PAS OBSTRUER L'ESPACE SOUS LE POÊLE.
COMBUSTIBLE: BÛCHES DE BOIS SEULEMENT - LES COMBUSTIBLES ARTIFICIELS AUTRES QUE CORDWOOD PEUVENT ENDOMMAGER L'APPAREIL

"PRÉVENTION DES INCENDIES"

Installer et utiliser seulement en accord avec les instructions d'installation du manufacturierer les codes locaux du bâtiment.

ATTENTION: Des méthodes spécifiques sont nécessaires pour faire passer la cheminée à travers un mur ou un toit. Référer aux codes locaux du bâtiment. Ne pas brancher cette unité à un conduit de cheminée desservant déjà un autre appareil.

NOTE: Remplacer la vitre seulement avec une vitre de CÉRAMIQUE de 4 mm.

Ce chauffe-bois nécessite une inspection et des réparations périodiques pour un bon fonctionnement. Consultez le manuel du propriétaire pour plus d'informations. Il est contraire aux règlements fédéraux d'utilisation ce chauffeur-bois d'une manière incompatible avec les instructions d'utilisation du manuel du propriétaire.

AVERTISSEMENT (MAISON MOBILE): Une prise d'air extérieur est nécessaire à la combustion et doit être effective sans restriction pendant que l'unité fonctionne.

CET APPAREIL UTILISE UN COMBUSTE CATALYTIQUE (Part # WF-4150001076)
La performance du dispositif catalytique ou sa durabilité n'a pas été évaluée dans le cadre de la certification
ATTENTION: les matériaux brûlants autres que les carburants spécifiés peuvent rendre le catalyseur inactif

Dégagements minimum aux matériaux combustibles*

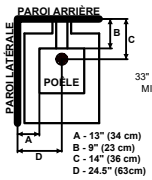

A - 13" (34 cm)
B - 9" (23 cm)
C - 14" (36 cm)
D - 24.5" (63cm)

Protection du sol*

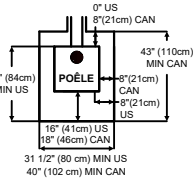

Quand le poêle est installé sur un plancher combustible, une protection de plancher non combustible doit être installée pour couvrir la surface sous la poêle. Elle doit dépasser d'au moins 16"(41cm) [18"(46cm) CAN] le devant du poêle, et 8" (21cm) au-delà du dos et des côtés du poêle [côté du poêle en CAN], et déborder de 2" (5 cm) de chaque côté du tuyau de raccordement de la cheminée.

PIÈCES DE VENTILATION REQUISES:
Diamètre de 6" (15,2 cm), tuyau simple, minimum 24 MSG, tuyau de raccord en acier noir pour cheminée homologuée préfabriquée de type HT ou pour cheminée de maçonnerie.

COMPOSANTES OPTIONNELLES:
Prise d'air extérieur Part # 96-53400
Soufflerie Part # 96-57400

*** Référer au Manuel**

AGENCE AMÉRICAINE DE PROTECTION DE L'ENVIRONNEMENT
D'emissions des particulates: 1,07 g/hr. Testé à: Méthode EPA 28R
Certifié pour se conformer aux normes d'émission de particules de bois structuré 2020

NE PAS ENLEVER OU NE PAS COUVRIR CETTE ÉTIQUETTE **FABRIQUÉ AUX ÉTATS-UNIS** **3300-750**

APPENDIX 8: Photographs of test set up

Dilution picture Dia 6 no. EG-030

Polytests Services Inc. 695 B rue Gaudette,St-Jean-sur-Richelieu Québec, Canada, J3B 7S7

Velocity ports at 90 degrees and tunnel temperature sensor location

Particulate sample extraction ports located 48 inches under (requirement 4D=24 inches minimum) velocity ports and 16 inches above downstream Tee. (Requirement 2D=12 inches minimum)

Adjustable damper for flow adjustments

Extraction blower

Total length between hood and sampling port : 22 feet.

POLYTESTS
TESTING THROUGH YOUR REALITY

60 inches horizontal run between two elbows. Mixing section, No mixing baffle. 6inches diameter pipe

Two 6 inches elbow with horizontal mixing section.

Hood diameter 32 (requirement 4D=24 inches minimum) inches and height of 24 inches (requirement 3D=18 inches minimum)

All pipe joints are sealed.

Stack sampling

Gas analysis and temperature probe

chimney support

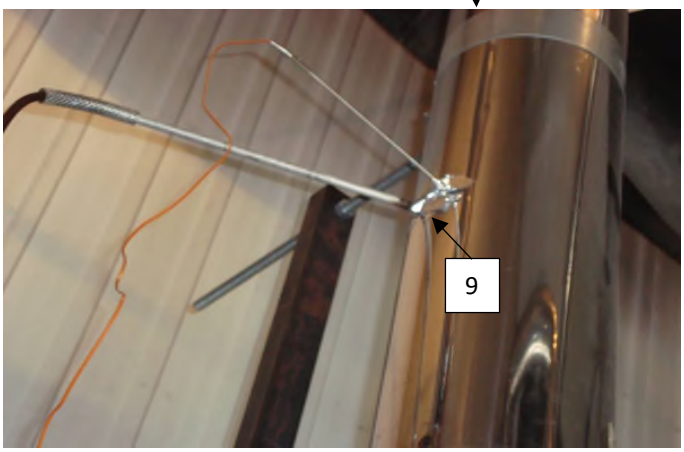

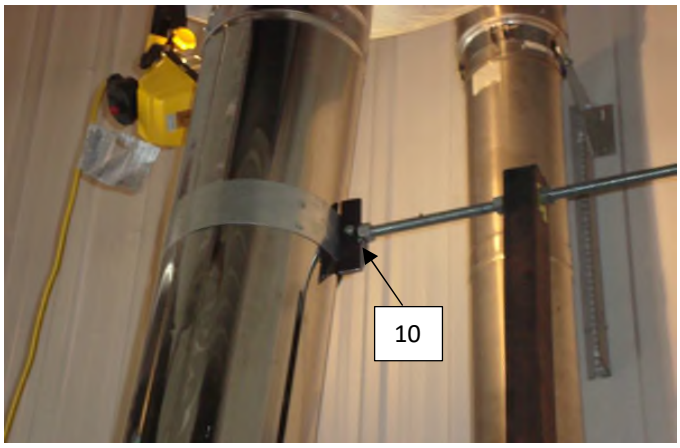

9 : Temperature and gas analyser sampling ports located 9 feet above platform

10 : Exhaust system support bracket

Draft sampling

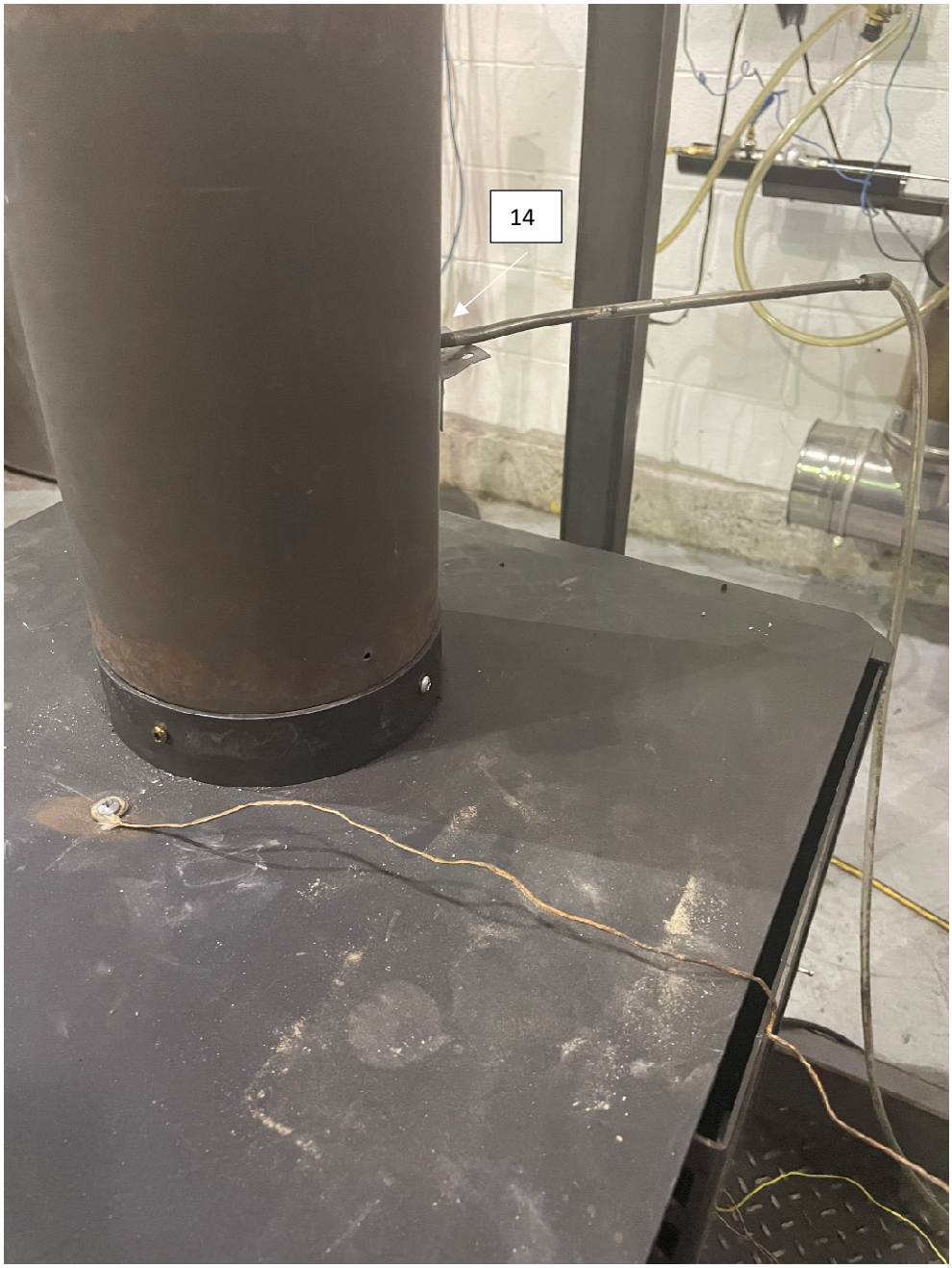

14 : Draft sampling port located 6 in. from the flue outlet

Equipment's

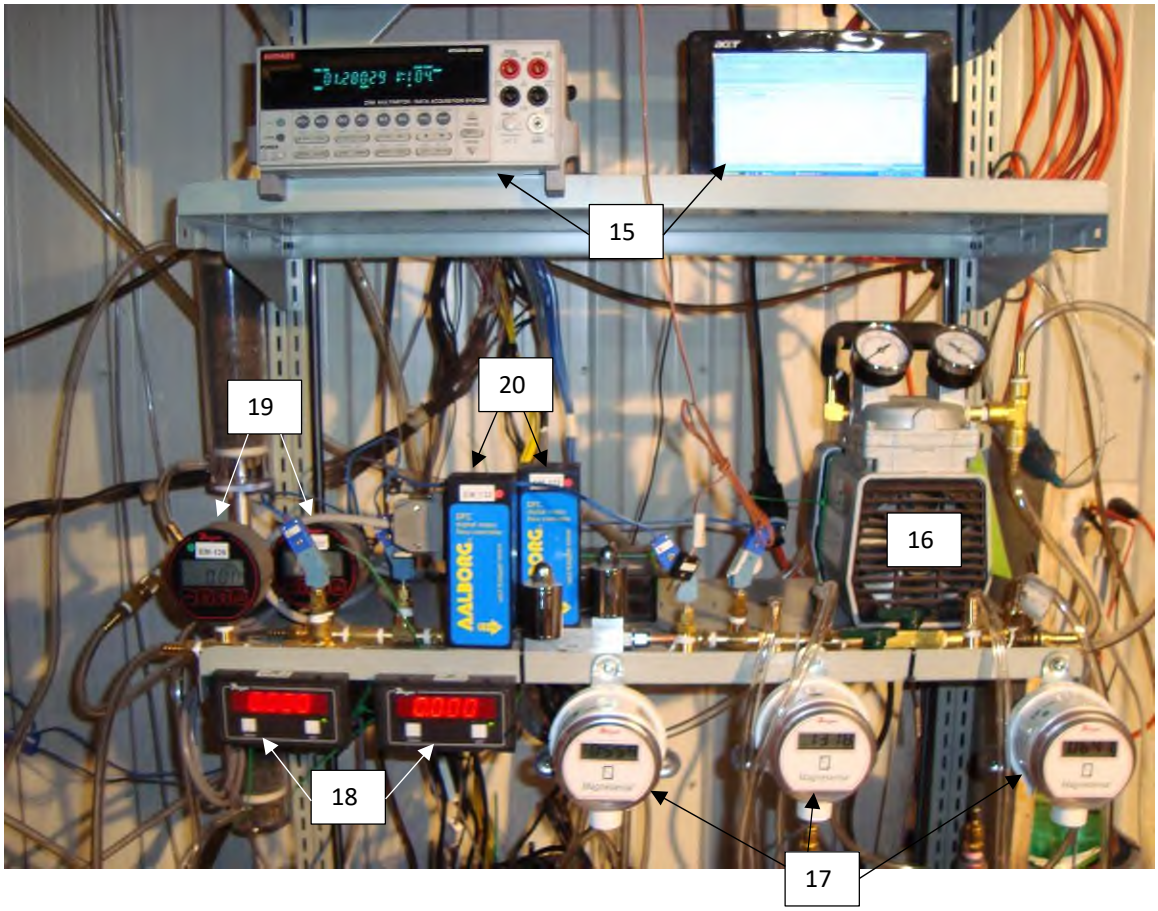

15 : Acquisition system

16 : Vacuum pump

17 : Digital manometer

18 : Digital read out for mass flow meter

19 : Digital vacuum gage

20 : Mass flow meter

Gaz analyser

Reference dry gas meter

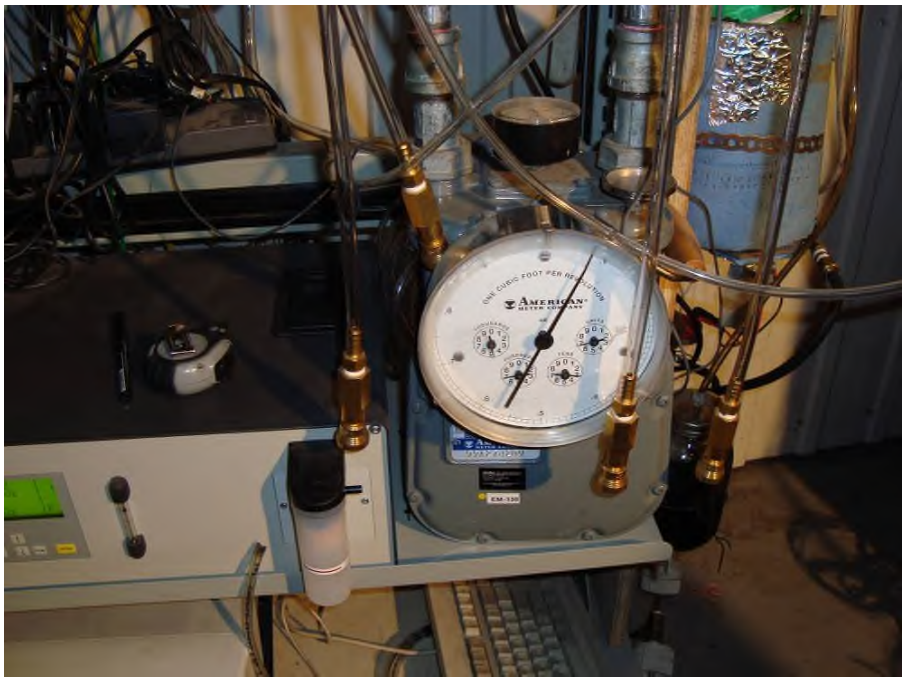

Dry gas meter for train 1, train 2 and room filter.

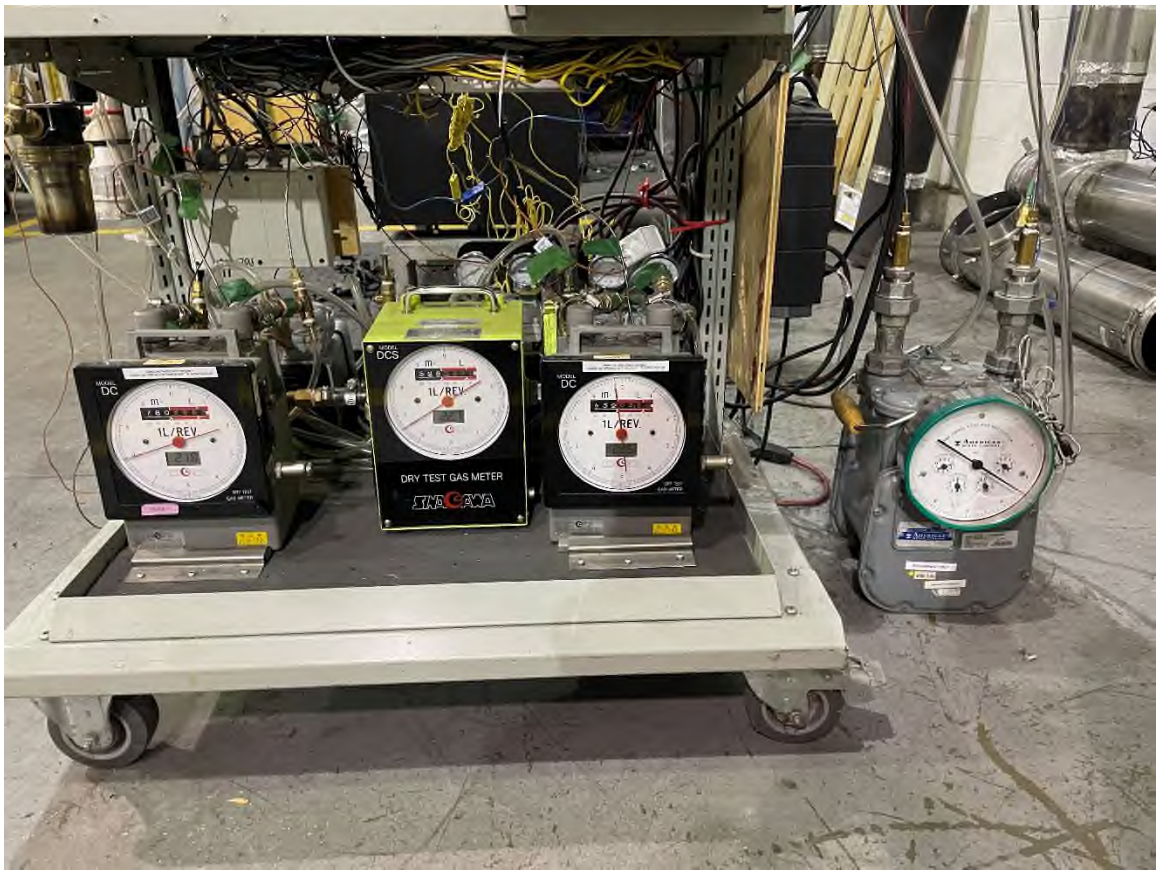

Dilution tunnel sample system

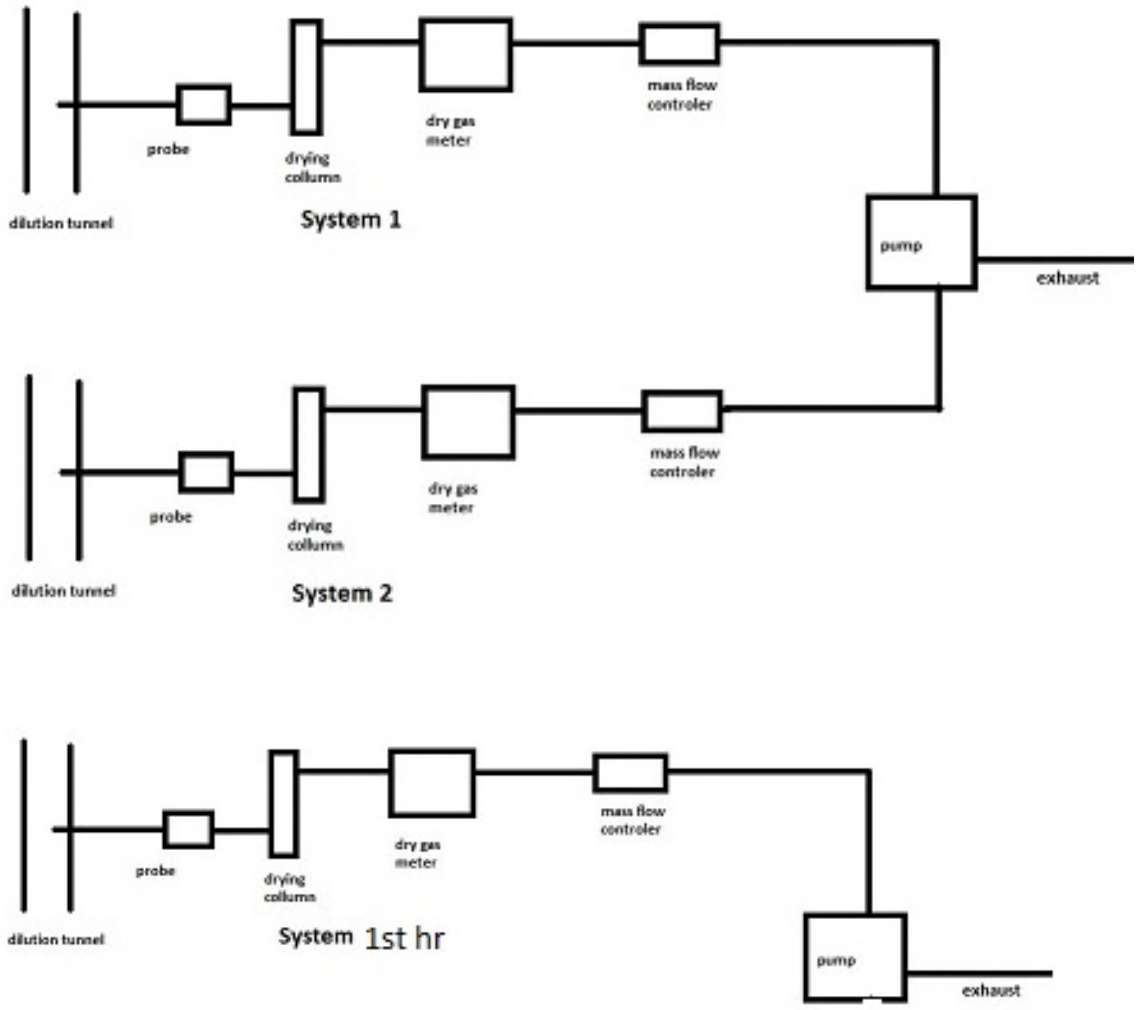

Dilution tunnel

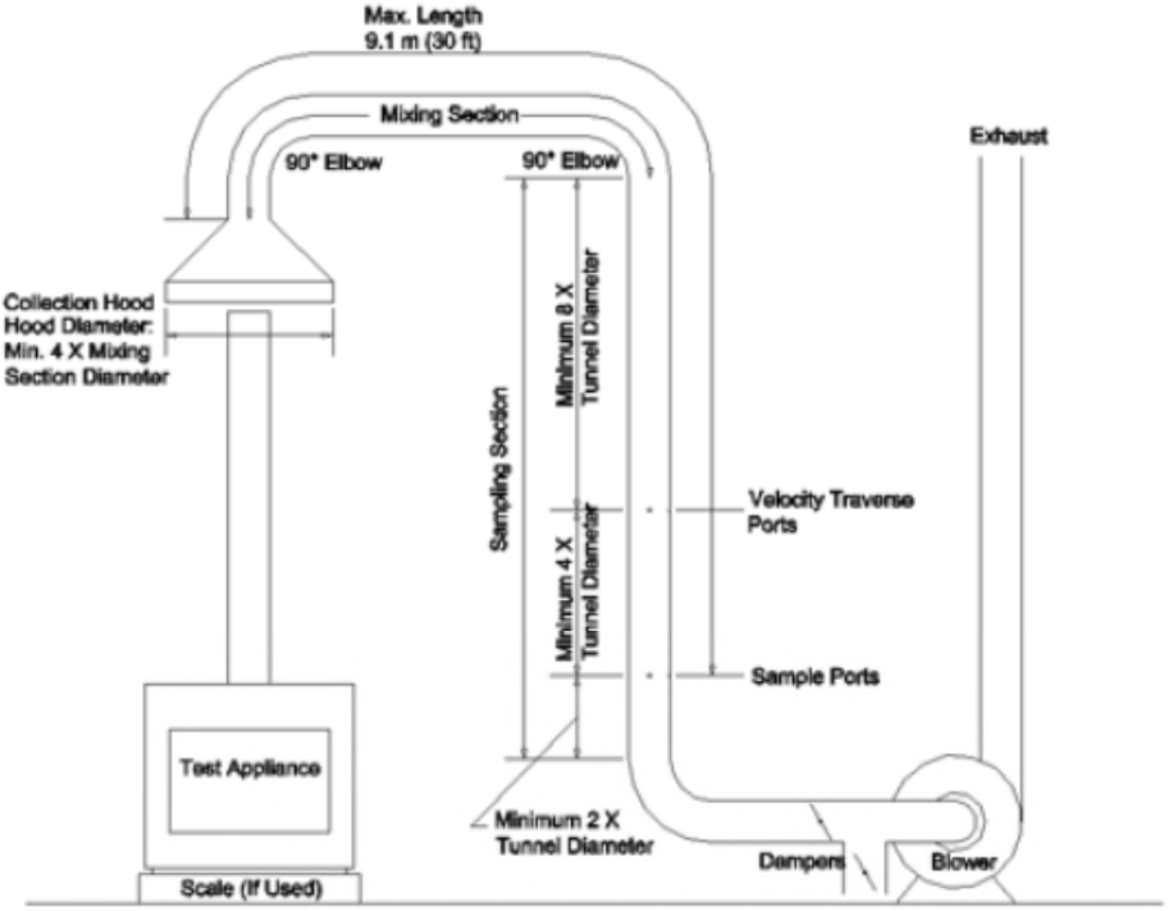

FIG. 3 Steel-Constructed Dilution Tunnel Apparatus

APPENDIX 9: Test load photographs

POLYTESTS
TESTING THROUGH YOUR REALITY

Run 1 March 18th 2019 minimum burn rate

Testing load

Testing load

Side view of stove

Load in the stove

POLYTESTS
TESTING THROUGH YOUR REALITY

Run 2 March 19th 2019 Category 3 burn rate

Back view of stove 	Testing load
Testing load 	Load in the stove

POLYTESTS
TESTING THROUGH YOUR REALITY

Run 3 March 20th Maximum burn rate

Testing load 	Testing load
Load in the stove 	Testing load

POLYTESTS
TESTING THROUGH YOUR REALITY

Run 4 March 21st 2019 minimum burn rate

Testing load

Testing load

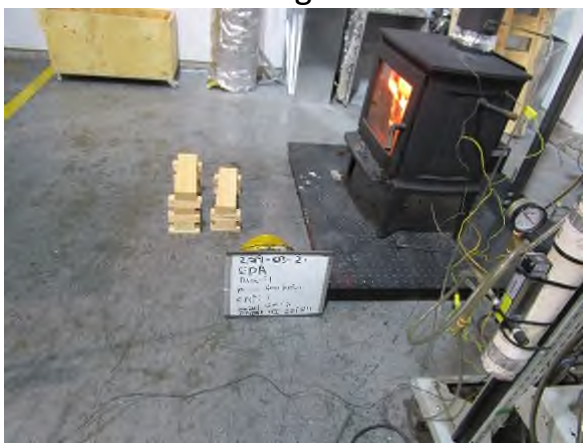

Load in the stove

Testing load

POLYTESTS
TESTING THROUGH YOUR REALITY

Run 5 March 25th 2019 NO fan confirmation test

Testing load 	Testing load
Load in the stove 	Testing load

POLYTESTS
TESTING THROUGH YOUR REALITY

Run 6 March 26th 2019 Minimum burn rate

Testing load 	Testing load
Load in the stove 	Testing load

APPENDIX 10: Laboratory Operating Procedures

POLYTESTS Services inc.

SFBA EMISSIONS AND EFFICIENCY TESTING LABORATORY OPERATING PROCEDURE

INTRODUCTION

This document provides a step by step guide for the technician conducting tests to EPA standard requirements. Procedures outlined here, when followed, will result in tests in conformance with EPA Methods 28R, ASTME2780, ASTME2515, ASTM E2618, Method 28WHH, Method 28 PTS, Method ALT-125, ASMTE 3053.

The primary measurements to be made are particulate emissions rates. The technician's duties include the following steps.

1. Incoming inspection of test units.
2. Set-up of test units.
3. Preliminary testing to establish unit operating procedures and familiarity with operating controls.
4. Calibration of test equipment.
5. Set-up, checking and operation of sampling apparatus.
6. Conduct of tests including complete record keeping and data recording for non-automated functions.
7. Operation of hardware and software included in automatic data acquisition system.
8. Review and analysis of data at test completion to ensure test validity.

The technician running this test must be familiar with the following documents, which are to be kept in the laboratory at all, times.

EPA METHODS

1. EPA METHODS 28R
2. ASTME2780
3. ASTME2515
4. ASTM E2618
5. METHOD 28WHH
6. METHOD 28 PTS
7. ALT-125
8. ASMTE 3053

I. APPLIANCE INSPECTION AND SET-UP

A. INCOMING INSPECTION

1. Check for completeness of unit including parts, accessories, installation and operating instructions, drawings and specifications etc. Note any discrepancies or missing parts or information.
2. Check for shipping damage. If damage has occurred, notify the laboratory manager. In some cases, repairs may be made, provided the manufacturer and laboratory manager concur that repairs will not affect the unit's performance. If damage is irrepairable, a new unit will need to be obtained.
3. Note whether unit is catalytic of non-catalytic.
4. Mark unit with manufacturer's name, model number, work order number and date received.
5. If unit is safety listed, note label data including listing agency and serial number. If unit is not listed, mark all data sheets "UNLISTED". Test results will not be released until unit passes safety tests without modification unless authorized by laboratory manager.

B. UNIT SET-UP

1. All new units must be operated for a breaking in period as follows.

    a) Non-catalytic units: Ten (48) hours at medium burn rate with Douglas Fir scrap or cordwood.
    b) Catalytic units: Fifty (50) hours at medium burn rate with Douglas Fir scrap or cordwood.

    During these break-in runs the unit may be connected to a lab chimney and fuel additions noted into the corresponding data acquisition file. For catalytic units, a thermocouple must be installed in the catalyst.

    Record catalyst temperature at 1-hour intervals or on chart recorder. Operating should continue until data shows at least fifty (50) hours of operation with catalyst temperature in excess of 500 degrees Fahrenheit (active range).

    For non-catalytic units a stack thermocouple should be installed and stack temperature recorded at 1-hour intervals. Fourthy-height (48) hours minimum burn time with a stack temperature of at least 250 degrees Fahrenheit is required.

    Once break-in is completed, allow unit to cool. Clean unit thoroughly.

2. Unit is to be placed on scale for testing. Prior to proceeding with verification process, scale should be turned on and allowed to warm up for one (1) hour minimum. Zero scale and check calibration with standard weights. One (1) 1 kg weight and one (1) 2 kg weight are provided for this purpose. Use scale verification test form no. EPA-7-TP to record results. If scale fails to reproduce weights within tolerance, check with laboratory manager before proceeding.
3. If scale checks out, place unit on scale and align so chimney will be centered in hood.
4. Attach chimney connector and chimney. Be sure all joints are sealed below sampling points. Chimney and connector should be cleaned with a wire brush. Be sure chimney connector terminates and chimney starts at proper level above scale platform. Chimney must be supported from scale so that it does not touch test enclosure or hood walls.
5. Thermocouples should be attached to surfaces of unit prior to testing. EPA requires a thermocouple on the bottom of the firebox. This must be installed prior to putting the unit on the scale. In some cases, the required thermocouple locations will be inaccessible on finished units. These units should have thermocouples installed by the manufacturer during construction. Check with the laboratory manager if problems are encountered in proper thermocouple attachment.
6. Measure firebox dimensions and record on data forms nos. EPA-2-TP. Make a three-dimensional sketch of the firebox including firebrick, baffles and obstructions. Calculate firebox volume in cubic feet with both addition and subtraction methods using forms nos. EPA-3-TP and EPA-4-TP. See Section 6.2.4 of EPA Method 28 for details of firebox volume determination.
7. If unit is catalytically equipped, additional thermocouples must be installed upstream and downstream of catalyst. Thermocouples should also be placed in the primary and secondary combustion chambers of all units.
8. Plug thermocouples into data acquisition system jacks making a check of locations and jack numbers for each test on data form no. EPA-5-TP.
9. Note that inserts are tested as if they are freestanding stoves.
10. Dilution tunnel should be cleaned prior to each certification test series and at anytime a higher burn rate follows a lower test burn rate.

II. SAMPLING SYSTEM – SET-UP

A. GAS ANALYSIS

1. Instruments should be turned on and allowed to warm up for one (1) hour minimum.

2. Calibrate analyzers as follows:

   NOTE : Prior to proceeding with calibration, make sure to use NIST tracable calibration gas bottles. Adjust flow meter if necessary at each instrument to required flow value.

   a) Using span gas, adjust span control to values specified on calibration gas label.
   b) Using nitrogene, adjust zero controls to provide a 0.00 analyzer readout.

   c) Repeat a) and b) until no further adjustment is required.
   d) Check readout vs. calibration gases (2) labels.

   The CO_2 and CO analyzers are "ZEROED" on nitrogen. The O_2 analyzer is spanned on air and set for 20.9%. It is zeroed on nitrogen as well.

3. Check for response time synchronization.

   a) With no fire in unit, allow reading to stabilize (O_2 should be 20.93, CO and CO_2 should equal O).
   b) Flow the calibration gas in the unit and start stop watch. Note the time required for each unit to reach .90 of the calibration gas bottle value. If all three analyzers reach this value within 15 seconds of each other, synchronization is adequate. If not, contact the laboratory manager. Synchronization is adjusted by internal instrument setting.

4. Set-up sample clean-up and water collection train as follows.

   a) Load impingers as follows:
   Impinger #1: 100 ml distilled water and 5 ml H_2SO_4
   Impinger #2: 100 ml distilled water and 5 ml H_2SO_4
   Impinger #3: Empty
   Impinger #4: 200 – 300 grams silica gel (dry)

b) Place impingers in container and connect with "U TUBES". Grease carefully on bottom half of ball joint so that grease will not get into tubes.

c) Connect filter to first impinger and sample line to last impinger.

e. Leak check system as follows.

1) Plug probe.
2) Turn on sample system.
3) Observe sample flow rotometer and vacuum gauge. If necessary, use vacuum; adjust valve to set vacuum to the maximum inches Hg.
4) If the float in rotometer does not stabilize below 10 on scale, system must be resealed.
5) Repeat leak check procedure until satisfactory results are obtained.

f) Just prior to starting test, fill impinger container with water and ice and record ambiant conditions on data form no. EPA-8-TP.

B. DILUTION TUNNEL SAMPLE TRAIN SET-UP

1. Filters and holders.

a) Clean probes and filter holder front housings carefully and desiccate for at least 24 hours prior to use.
b) Filters should be numbered and filter and probe combinations labeled prior to use.
c) Weigh desiccated filters and probe-filter units on analytical balance. Record weights data form no. EPA-10-TP. Note that probe and front half of front filter are to be weighed as a unit.
d) Carefully assemble filter holder units and connect to sampling systems. Check "DRIERITE" columns for adequate dry absorbent (blue).

2. Leak checking.

a) Each sample system is to be checked for leakage prior to inserting probes in tunnel.
b) Plug probes and start samplers, adjust pump bypass valve to produce a vacuum reading of 5 inches Hg. (NOTE: During test, vacuum must not exceed 5 inches unless posttest leak check shows acceptable results.)

c) Allow vacuum indication to stabilize for two (2) minutes, then record time and dry gas (DGM_1) and (DGM_2) meter readings. Wait ten (10) minutes and record dry gas meter readings again (DGM_3, DGM_4). NOTE: If mark, system is leaking too much and all seals should be checked.

d) Calculate leakage rate as follows.

1) System 1: $\frac{(DGM_3 - DGM_1)}{10} = CFM_1$

2) System 2: $\frac{(DGM_4 - DGM_2)}{10} = CFM_2$

If CFM_1 or CFM_2 is greater than .02 CFM, leakage is unacceptable and system must be resealed.

If CFM_1 or CFM_2 is greater than 0.04 X sample rate, leakage is unacceptable. For most tests, the sample rate will be about 0.15 CFM, thus leakage rates in excess of 0.04 X 0.15 = 0.006 CFM are not acceptable. Record leakage rates on form no. EPA-5-TP

e) Once leakage check is satisfactory, unplug probe and set flow to appropriate rate for test. This should be done in the minimum amount of time necessary and with the probes in ambient air. Do not insert probes in tunnel until the start of the test run. When flow is established, replug probes to prevent contamination.

III. TEST CONDUCT

A. FUEL LOAD

1. Determine optimum load weight by multiplying firebox volume in cubic feet by 7 or (10 and 12 for cordwood method). This is the load weight on an as-fired basis.
2. Determine piece size to obtain the requested load configuration and meet the test load weight criteria. The load should consist of the following: **TO BE DETERMINED**
3. Weigh out test load and adjust weight by shortening all pieces equally if necessary. Record individual piece load on form no. EPA-11-TP.

4. Measure and record moisture content of each fuel piece using Delmhorst moisture meter. Determine if fuel load moisture content is in required range. If not, construct new load using wood with required moisture content. All wood in the humidity chamber should be within range. Contact project manager if you cannot find suitable pieces. Record moisture of each individual piece load on form no. EPA-11-TP.

B. UNIT START-UP

1. Before lighting a fire, turn on dilution tunnel and set tunnel velocity to 500ft/min Record readings on data form no. EPA-9-TP.
2. Check draft imposed on cold stove with all inlets closed and a draft gauge in the chimney. If draft is greater than 0.005 inches water column, adjust tunnel to stack gap until draft is less than 0.005.
3. Check for ambient airflow around unit with hot wire anomometer. Must be less than 50 ft/min.
4. Check all equipment for proper operation. Analyzers should be on and in sample mode. Computer should be loaded with test program and awaiting test start command.
5. Zero scale and start fire with uncolored newspaper and kindling representing 10 % of test load with the same type of fuel.
6. Once kindling is burning well after 5 minutes, add splitted pieces having a bottom surface around 4 sq. inches and representing 25% of test load weight. Operate at high fire for 15 minutes. Then adjust settings to intended test run levels as per the manufacturer's.
7. Following addition of pretest fuel load (splitted pieces), start computer for data logging.
8. All fuel additions, air intake settings and operational characteristics shall be noted with associated time stamp on form no. EPA-1-TP.

C. TEST RUN

1. Once the targeted test fuel bed weight is obtained, the test is to be started as follows:

   a) Insert the sample probes into the tunnel being careful not to hit sides of tunnel with probe tip.
   b) Check tunnel pitot tube for proper position. (Pitot should be carefully cleaned prior to each test.)
   c) Turn on probe sample systems and stack sampler.
   d) Open stove door, rake coals and load stove as follows: **TO BE DETERMINED**
   e) Close door or follow manufacturer's start-up procedures. (Five (5) minutes maximum time before all doors and controls must be set to final positions for duration of test. 15 minutes allowed for ALT-125 method))
   f) An alarm will sound an audible signal at the (10) minutes intervals. This signal a reading interval. You must verify at each interval that the following readings are correctly logged by the data acquisition system and make observations of any unusual or non-routine events that could occur.

      1) Rotometer readings.
      2) Tunnel pitot tube reading.
      (Zero regularly between readings)
      3) Gas meter readings.
      4) Temperature readings.
      5) Draft reading
      6) Test laod weight
      7) CO, CO_2 and O_2 readings
      8) Observations of any unusual or non-routine events.

   g) During the test, any condition approaching unacceptable limits will be noted. The filter probes and housings are installed in small holders just outside the tunnel. If the filter temperature gets too high, you will have to increase the water flow through the cooling unit until acceptable temperatures are obtained. In between readings, check on other equipment. Be sure dryers and filters are working and monitor impinger train for proper water and ice levels etc.

   h) When the fuel charge is consumed, it will signal end of test and shut down the sampling systems. When this occurs,

remove filter holder and probes from tunnel and impingers from sample line.

IV. POST TEST PROCEDURES

A. SAMPLE RECOVERY – FILTER TRAINS

1. Carefully clean outside of probes and filter housings with alcohol.
2. Disassemble filter holder and transfer filters to clean petri dish. Scrape gasket with scalpel and collect any loose material on filters.
3. Place probe and front half of first filter holders (still assembled) and filters in desiccator. Allow 24-hour desiccation before weighing.
4. Weigh probe filter holder units and filters at six (6) hour intervals until weight change between weighings is less than 0.2 mg. Record all weights taken on data form no. EPA-10-TP.

B. CALCULATION OF RESULTS

The computer program carries out all final calculations. When run, it will ask for data from forms used during the test. Enter data as called for.

GENERAL

This guide cannot cover every possible contingency, which may develop during a particular test program. Many questions, which may arise, can be answered by a complete understanding of the test standards and their intent. When in doubt on any detail, check with the laboratory manager and be sure you understand the procedures involved.

It is critical that all spaces on the data forms be properly filled in. Each test must be represented by a complete record of what was done and when.

APPENDIX 11: Sample calculations

Validation du fichier de calcul avec les équations provenant des normes:
ASTM E2515-11
ASTME2618

Dry burn rate (BR)

Equation used

B415.1, 13.4

$$BR = \left[\frac{60W_{WD}}{\theta}\right]\left[\frac{100 - \%M_W}{100}\right]$$

Nomenclature

BR	Dry wood burn rate, kg/hr (lb/hr)
W_{WD}	Total mass of wood burned (wet basis) during the test run, kg (lb)
θ	Total time of test run, minutes
$\%M_W$	Average moisture in test fuel charge, wet basis, %
	To convert from dry basis to wet basis: % moisture wet basis =

Sample calculation

Data

W_{WD}	9,516	lbs
θ	209	min
$\%M_W$	16,93	%

Calculation

BR	1,030	Dry kg/hr

Volume of gas sample corrected to dry standard conditions ($V_{m(std)}$)

Equation used

ASTM 2515, equation 6

$$V_{m\,(std)} = K_1 V_m Y \left[\frac{P_{bar} + \left(\frac{\Delta H}{13.6}\right)}{T_m}\right]$$

Nomenclature

$V_{m\,(std)}$	Volume of gas sample , corrected to standard conditions, $dscm^3$ (dscf)
K_1	17.64 R/in Hg
V_m	Volume of gas sample
Y	DGM calibration factor
P_{bar}	Barometric pressure mmHg (in Hg)
ΔH	Average pressure at the outlet of the dry gas meter mm water (in. Water)
T_m	Absolute average dry gas meter temperature K (R)

Sample calculation

Data

V_m	39,84	dcf
Y	0,98730288	
P_{bar}	30,11	in Hg
ΔH	-0,6447	in Hg
T_m	532,2	R

Calculation

$V_{m(std)}$	38,41	dscf

Total amount of particulate matter collected (m_n)

Equation used

ASTM 2515, equation 12

$$m_n = F_1 + F_2 + \Delta PF$$

Nomenclature

m_n	Total amount of particulate matter collected, mg
F_1	Particulate matter collected on front filter, mg
F_2	Particulate matter collected on second filter, mg
ΔPF	Post-test weight gain of probe and filter holder assembly, mg

Sample calculation

Data

F_1	0	g
F_2	-0,002	g
ΔPF	0,004	g

Calculation

m_n	1,700	mg

Calculation based of train 2 data

Particulate concentration (C_S)

Equation used

ASTM 2515, equation 13

$$C_S = (0{,}001\ g/mg) \times \left(\frac{m_n}{V_{m\,(std)}}\right)$$

Nomenclature

C_S	Concentration of particulate matter in stack gas or dilution tunnel, dry basis, corrected to standard conditions, g/dsm^3 (g/dscf)
m_n	Total amount of particulate matter collected in the sampling train, mg
$V_{m(std)}$	Volume of gas sample measured corrected to dry standard conditions, dsm^3 (dscf)

Sample calculation

Data

m_n	1,700	mg
$V_{m(std)}$	38,41	dscf

Calculation

C_s	0,000044	g/dscf

Calculation based of train 2 data

Particulate concentration for room air (C_r)

Equation used

ASTM 2515, equation 14

$$C_r = (0{,}001\ g/mg) \times \left(\frac{m_r}{V_{mr\,(std)}}\right)$$

Nomenclature

C_r	Concentration of particulate matter in room air, dry basis, corrected to standard conditions, g/dsm^3 (g/dscf)
m_r	Total amount of particulate matter collected in the sampling train, mg
$V_{mr(std)}$	Volume of room air sample measured corrected to dry standard conditions, dsm^3 (dsc

Sample calculation

Data

m_r	0,100	mg
$V_{mr(std)}$	52,56	dscf

Calculation

C_r	0,000002	g/dscf

Calculation based of train 2 data

Adjustment factor for alternative pitot tube placement (FP)

Equation used

ASTM 2515, equation 1

$$F_P = \frac{V_{strav}}{V_{scent}}$$

Nomenclature

V_{strav}	Average gas velocity caclulated after the Pitot tube traverse
V_{scent}	Average gas velocity at the center of the dilution tunnel cacluated after the multi-point Pitot traverse
F_P	Adjustment factor for center of tunnel pitot tube placement

Sample calculation

Data

V_{strav}	0,231493185
V_{scent}	0,246981781

Calculation

F_P	0,937289

Average dilution tunnel gas velocity (V_S)

Equation used

ASTM 2515, equation 9

$$V_S = F_p K_P C_P \left(\sqrt{\Delta P}\right)_{avg} \sqrt{\frac{T_S}{P_S M_S}}$$

Nomenclature

V_S	Average dilution tunnel gas velocity, m/s (ft/s)
K_P	Pitot tube constant For the metric units: $34.97\ m/sec \left[\frac{\left(\frac{g}{g-mole}\right)(mm\ Hg)}{(°K)(mm\ H_2O)}\right]^{1/2}$ For English units: $85.49\ ft/sec \left[\frac{\left(\frac{lb}{lb-mole}\right)(in\ Hg)}{(°R)(in\ H_2O)}\right]^{1/2}$
C_P	Pitot tube coefficient (use 0.99 for standard pitot tube, 0.84 may be used for S-type tubes constructed according to Method 2 specifications)
F_P	Pitot tube correction factor
$\left(\sqrt{\Delta P}\right)_{avg}$	Average square root of each individual velocity head (ΔP)
P_{bar}	Barometric pressure at measurement site, mm H_2O (in. H_2O)
P_g	Stack static pressure, mm Hg (in. Hg)
P_S	Absolute dilution tunnel static gas pressure, mm Hg (in. Hg), or $P_{bar} + P_g$
M_S	Molecular weight of dilution tunnel gas, wet basis, g/g-mole (lb/lb-mol) may be assumed to be 28.78 or 29 for CSA B415
t_S	Dilution tunnel temperature, °C (°F)
T_S	Absolute dilution tunnel temperature, °K (°R), or 273 + t_s for metric units, 460 + t_s for English units

Sample calculation

Data

K_P	85,49	
C_P	0,99	
F_P	0,937	
$\left(\sqrt{\Delta P}\right)_{avg}$	0,2473	in $H_20^{1/2}$
P_{bar}	30,11	in Hg
P_g	0,25	in H_20
P_S	30,12	in Hg
M_S	28,78	lb/lb-mol
t_S	81,62	F
T_S	541,62	R

Calculation

V_S 15,5080 ft/s

Average dilution tunnel gas flow rate (Qstd)

Equation used

ASTM 2515, equation 3

$$Q_{std} = 60(1 - B_{WS})V_S A\left(\frac{T_{std}}{T_S}\right)\left(\frac{P_S}{P_{std}}\right)$$

Nomenclature

Q_{std}	Total gas flow rate corrected to dry standard conditions, dsm^3/min (dscf/min)
60	Conversion factor minutes per hour
B_{WS}	Water vapour in the dilution tunnel stream, proportion by volume (may be assumed to be 2%)
V_S	Average dilution tunnel gas velocity, m/s (ft/s)
A	Cross-sectional area of dilution tunnel, m^2 (ft^2)
T_{std}	Standard absolute temperature, 293 °K (528°R)
T_S	Absolute average dilution tunnel temperature, °K (°R), or 273 + t_s for metric units, 460 + t_s for English units
t_S	Dilution tunnel temperature, °C (°F)
P_S	Absolute dilution tunnel static gas pressure, mm Hg (in. Hg), or P_{bar} + P_g
P_{bar}	Barometric pressure at measurement site, mm Hg (in. Hg)
P_g	Dilution tunnel static pressure, mm Hg (in. Hg)
P_{std}	Standard absolute pressure, 760 mm Hg (29.92 in. Hg)

Sample calculation

Data

B_{WS}	0,02	
V_S	15,508	
A	0,196	ft^2
T_{std}	528	R
T_S	541,62	R
P_S	30,124	in Hg
P_{std}	29,92	in Hg

Calculation

Q_{std}	175,73	dscf/min

Particulate emission rate (E)

Equation used

$$E = (C_S - C_r)Q_{std}$$

Nomenclature

E	Particulate emission rate, g/hr
C_S	Concentration of particulate matter in stack gas or dilution tunnel gas, dry basis corrected to standard conditions, g/dscm^3 (g/dscf)
C_r	Concentration of particulate matter in room air, g/dscm^3 (g/dscf)
Q_{std}	Total gas flow rate, dry basis corrected to standard conditions, dsm^3/min (dscf/min)

Sample calculation

Data

C_S	0,000044	g/dscf
C_r	0,000002	g/dscf
Q_{std}	175,73	dscf/min

Calculation

E	0,01	g/min
E	0,45	g/h

Calculation based on train 2 data.

Total particulate emission rate (E_T)

Equation used

ASTM 2515, equation 15

$$E_T = (C_S - C_r)Q_{std}\theta$$

Nomenclature

E_T	Total particulate emission, g
C_S	Concentration of particulate matter in stack gas or dilution tunnel gas, dry basis corrected to standard conditions, g/dscm^3 (g/dscf)
C_r	Concentration of particulate matter in room air, g/dscm^3 (g/dscf)
Q_{std}	Total gas flow rate, dry basis corrected to standard conditions, dsm^3/min (dscf/min)
θ	Total sampling time, min

Sample calculation

Data

C_S	0,000044	g/dscf
C_r	0,000002	g/dscf
Q_{std}	175,73	dscf/min
θ	209	min

Calculation

E	1,56	g

Calculation based on train 2 data.

Average gas velocity in dilution tunnel during each min interval, i, of the test run

Equation used

ASTM 2515, equation 10

$$v_{si} = F_p K_p C_p \sqrt{\Delta p_i} \sqrt{\frac{T_{si}}{P_s M_s}}$$

Nomenclature

v_{si}	Average gas velocity in dilution tunnel during each min interval, i of the test run m/sec (ft/sec)
F_P	Pitot tube correction factor
K_P	Pitot tube constant For the metric units: $34.97\ m/sec \left[\frac{\left(\frac{g}{g-mole}\right)(mm\ Hg)}{(°K)(mm\ H_2O)}\right]^{1/2}$ For English units: $85.49\ ft/sec \left[\frac{\left(\frac{lb}{lb-mole}\right)(in\ Hg)}{(°R)(in\ H_2O)}\right]^{1/2}$
C_P	Pitot tube coefficient (use 0.99 for standard pitot tube, 0.84 may be used for S-type tubes constructed according to Method 2 specifications)
Δp_i	interval, i, of the test run
T_{Si}	Absolute average gas temperature in the dilution tunnel during the ith minutes
P_S	Absolute dilution tunnel static gas pressure, mm Hg (in. Hg), or $P_{bar} + P_g$
M_S	Molecular weight of dilution tunnel gas, wet basis, g/g-mole (lb/lb-mol) may be assumed to be 28.78

Sample calculation

Data

i=1		**i=2**	
F_P	0,937	F_P	0,937
K_P	85,49	K_P	85,49
C_P	0,99	C_P	0,99
Δp_i	0,061 in H_20	Δp_i	0,061 in H_20
T_{Si}	553,4 R	T_{Si}	550,5 R
P_S	30,12 in Hg	P_S	30,12 in Hg
M_S	28,78 lb/lb-mol	M_S	28,78 lb/lb-mol

Calculation

i=1		**i=2**	
v_{si}	15,71 ft/sec	v_{si}	15,58 ft/sec

Percent of proportional sampling rate (PR)

Equation used

B415, equation 13.1

$$PR = \left(\frac{\theta V_{mi(std)} V_S T_m T_{Si}}{\theta_i V_m V_{Si} T_{mi} T_S} \right) \times 100$$

Nomenclature

PR	Percent of proportional sampling rate (%)
θ	Total sampling time, min
θ_i	Time of interval, 1 min
V_m	Volume of gas sample measured by the DGM, dsm^3 (dscf)
$V_{mi(std)}$	Volume of gas sample measured by the digital mass flow controller during the ith 1 minutes interval, dsm^3 (dscf)
V_S	Average gas velocity in the dilution tunnel, ft/min
V_{Si}	Average gas velocity in the dilution tunnel during the ith 10 minutes interval, ft/min
T_m	Absolute average digital mass flow controller temperature, K (R)
T_{mi}	Absolute average digital mass flow controller temperature during the ith 1 minutes
T_S	Absolute average gas temperature in the dilution tunnel, K (R)
T_{Si}	Absolute average gas temperature in the dilution tunnel during the ith 1 minutes

Sample calculation

Data

train =1			train =2		
θ	209	min	θ	209	min
θ_i	1	min	θ_i	1	min
V_m	39,51	dcf	V_m	38,42	dcf
$V_{mi(std)}$	0,190	cuft	$V_{mi(std)}$	0,1857	cuft
V_S	15,52	ft/sec	V_S	15,52	ft/sec
V_{Si}	15,717	ft/sec	V_{Si}	15,717	ft/sec
T_m	531,8	R	T_m	532,2	R
T_{mi}	532,33	R	T_{mi}	532,60	R
T_S	541,62	R	T_S	541,62	R
T_{Si}	553,4	R	T_{Si}	553,4	R

Calculation

train=1		**train=2**	
PR	101,3 %	PR	101,9 %

Filter face velocity check

Equation used

$$FV_{max} = \frac{V_{mL}}{1} \times \frac{1}{F_A}$$

Nomenclature

FV_{max}	Maximum filter face velocity during the test run, m/min (ft/min)
V_{mL}	Largest 1 minute interval metered gas volume value recorded during the test run, dm^3 (dcf)
F_A	Filter area exposed to gas sample during train operation, m2 (ft^2)

Sample calculation

Data

V_{mL}	0,184	dcf
F_A	0,0116	ft^2

Calculation

FV_{max}	15,82	ft/min

Dual train precision

Equation used

$$\frac{Train\ 1 - average\ train\ 1\ and\ train\ 2}{average\ train\ 1\ and\ train\ 2} \times 100 \leq 7.5\%$$

Nomenclature

Dual train precision	Deviation between emission's train 1 and 2
Train 1	Total emission for train 1
Train 2	Total emission for train 2

Sample calculation

Data

Train 1	1,60 g
Train 2	1,56 g

Calculation

Dual train precision	1,53 %

Analyzer drift checks

Equation used

$$Drift = \frac{\Delta R}{span} \times 100$$

Nomenclature

Drift	The change in analyzer response to calibration gas over the duration of the test run
∆R	The difference between the analyzer response at the end of the test run and the
Span	The upper limit of the instrument range, ppmv or %

Sample calculation

Data

∆R	0,015 %
Span	5 %

Calculation

Drift	0,30 %

Calculated with CO concentration values.

APPENDIX 12: Volume calculations

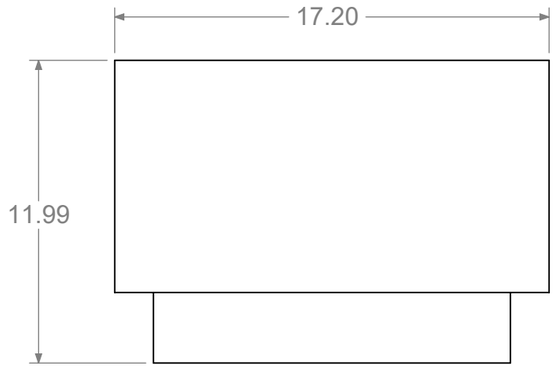

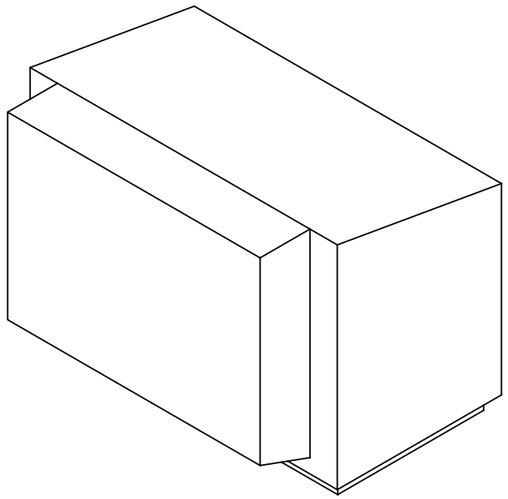

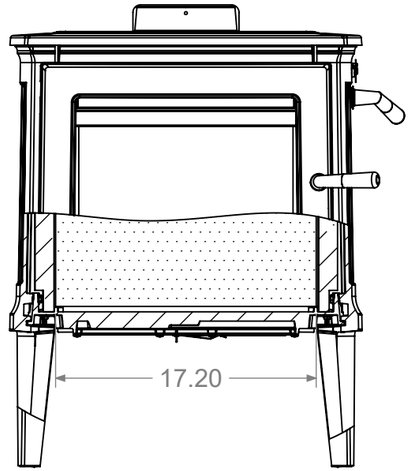

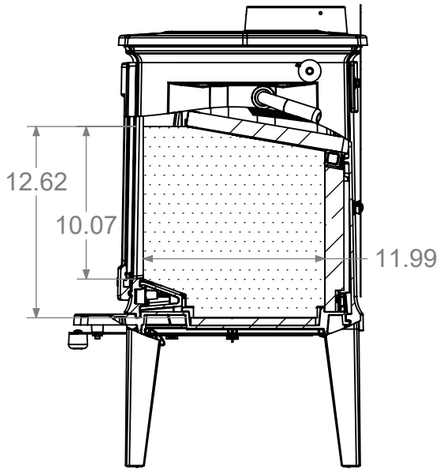

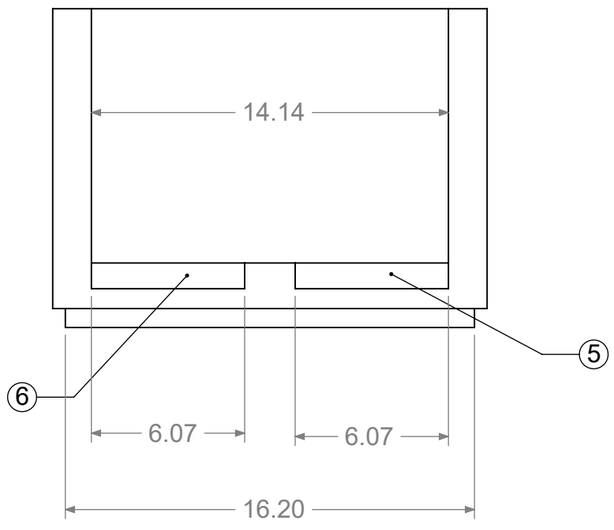

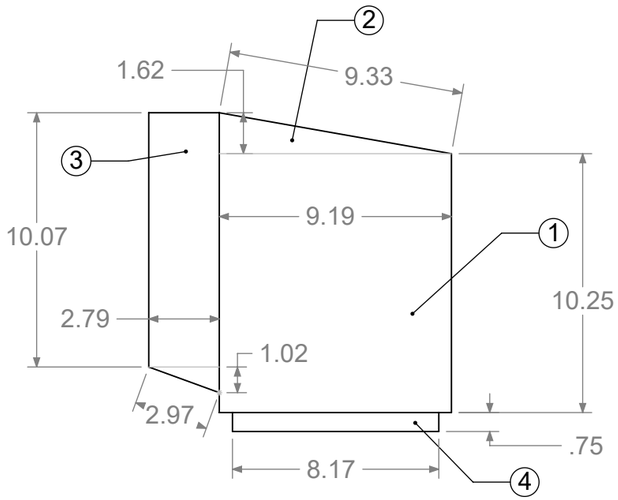

ZONE	DIMENSIONS	AREA (IN^3)
1	9.19X10.25X17.20	1620.20
2	9.33X1.62X9.19X17.20	128.04
3	2.79X10.07X14.14	397.28
4	8.17X16.20X.75	99.27
5	2.97X1.02X2.79X6.07	8.64
6	2.97X1.02X2.79X6.07	8.64
	TOTAL (IN^3)	2262.07
	X/1728	1.31 FT^3

TOTAL USABLE FIREBOX VOLUME IS SAME AS FULL FIREBOX VOLUME

WEIGHT:81.74 LBS

REVISIONS

ECO	REV.	DESCRIPTION	DATE	APPROVED

VIEWS ARE THIRD ANGLE

This document submitted by HearthStone is the property of HearthStone and may contain information of a proprietary nature and shall not be copied or duplicated in whole or in part or used in whole or in part for any purpose other than that which is necessary for the preparation of bids or fabrication. Please return to HearthStone.

UNLESS OTHERWISE SPECIFIED:
TOLERANCES ARE:
FRACTIONS DECIMALS ANGLES
± 1/64 .XX± .015 ± 1/4°
.XXX ± .005

1.) DIMENSIONS ARE IN INCHES / MM
2.) ALL MACHINED SURFACES TO BE DE-BURRED AND SMOOTHED

MATERIAL: Material <not specified>

FINISH: Finish

CAD GENERATED DRAWING, DO NOT MANUALLY UPDATE

APPROVALS	DATE
DRAWN SPB	11/2/2023
CHECKED	
RESP ENG	
MFG ENG	
QUAL ENG.	

hearthstone

8640/8392/8240

USABLE FIREBOX VOLUME

SIZE B | HEARTHSTONE DWG. NO. | REV. 0

SCALE: 1:8 | HERGOM DWG. NO. | SHEET1 OF 1

APPENDIX 13: Operating instruction

hearthstone

Wood Stove Operating Instructions

Model: GM 40

Date: 6/2/2017

Test Engineer: D. Bryant

Burn Rate Category	Kindling	Pre-burn Load	Test Load	Pre-Burn Start	Air Setting	Fan Setting	Coal Bed	Test Start
Low 0.80-0.95 kg/hr typ.	*2.5 lbs of kindling *Burn to 0.8-1.0 lbs before adding pre-burn	*14 ea- 2"x4"x8" (Leave door cracked for 5 min to insure preload ignition) *Close bypass @10 lbs fuel weight	*5 ea - 2"x4" 13.5" to 14.5" long *16 ea - spacers *low-avg-high (lbs) 8.29 - 9.21 - 10.13 (lbs)	2.4 lbs up from top of coal bed range *~500 ^{o}F stove temp	.065" (CLOSED)	ON - Pre-Burn (low) ON - Test (low) Note: fan will start automatically from thermostat	Rake coal bed 1-2 minutes before test start. Ensure clear path for lower primary.	*420 ^{o}F stove temp *600 ^{o}F CAT temp *Close door and bypass after loading *Primary full open for first 5 minutes.
Medium Low 0.95-1.25 kg/hr typ.	*2.5 lbs of kindling *Burn to 0.8-1.0 lbs before adding pre-burn	*14 ea- 2"x4"x8" (Leave door cracked for 5 min to insure preload ignition) *Close bypass @10 lbs fuel weight	*5 ea - 2"x4" 13.5" to 14.5" long *16 ea - spacers *low-avg-high (lbs) 8.29 - 9.21 - 10.13 (lbs)	4.0 lbs up from top of coal bed range ~500 ^{o}F stove temp	0.070"	ON - Pre-Burn (low) ON - Test (low) Note: fan will start automatically from thermostat	Rake coal bed 1-2 minutes before test start. Ensure clear path for lower primary.	*480 ^{o}F stove temp *700 ^{o}F CAT temp *Close door and bypass after loading *Primary full open for first 5 minutes.
Medium High 1.26-1.75 kg/hr typ.	*2.5 lbs of kindling *Burn to 0.8-1.0 lbs before adding pre-burn	*14 ea- 2"x4"x8" (Leave door cracked for 5 min to insure preload ignition) *Close bypass @10 lbs fuel weight	*5 ea - 2"x4" 13.5" to 14.5" long *16 ea - spacers *low-avg-high (lbs) 8.29 - 9.21 - 10.13 (lbs)	5.4 lbs up from top of coal bed range ~500 ^{o}F stove temp	.250"	ON - Pre-Burn (low) ON - Test (low) Note: fan will start automatically from thermostat	Rake coal bed 1-2 minutes before test start. Ensure clear path for lower primary.	*520 ^{o}F stove temp *750 ^{o}F CAT temp *Close door and bypass after loading *Shut down primary after test load ignites (approx. 2 minutes)
High 1.76-2.00 kg/hr typ.	*2.5 lbs of kindling *Burn to 0.8-1.0 lbs before adding pre-burn	*14 ea- 2"x4"x8" (Leave door cracked for 5 min to insure preload ignition) *Close bypass @10 lbs fuel weight	*5 ea - 2"x4" 13.5" to 14.5" long *16 ea - spacers *low-avg-high (lbs) 8.29 - 9.21 - 10.13 (lbs)	Start Pre-Burn immediately after loading stove.	FULL OPEN	ON - Pre-Burn (low) ON - Test (low) Note: fan will start automatically from thermostat	Rake coal bed 1-2 minutes before test start. Ensure clear path for lower primary.	*550°F stove temp *800 ^{o}F CAT temp *Close door and bypass after loading *Primary stays at full open setting

Typical Pre-Burn Load	Typical Test Load	Additional Instructions
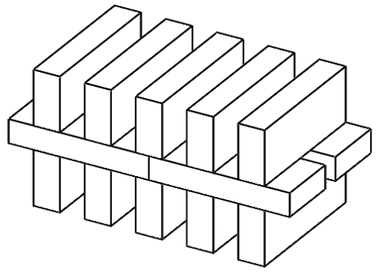	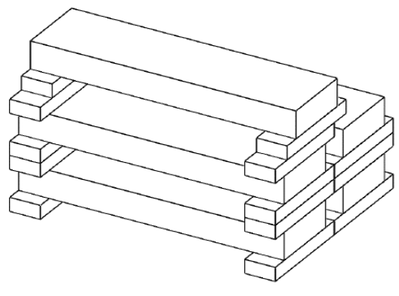	

APPENDIX 14: Drawing Air flow pattern

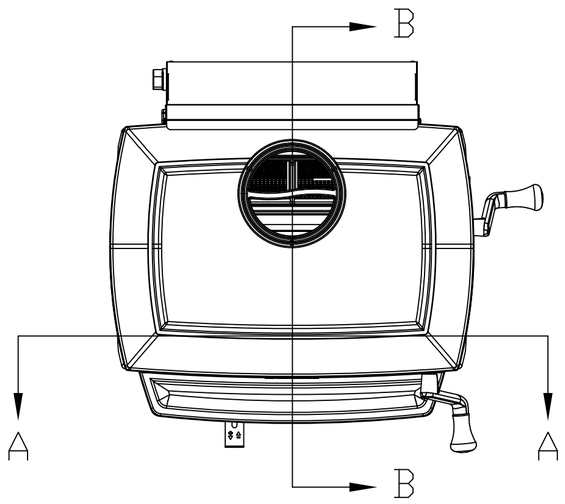

INLET

OUTLET

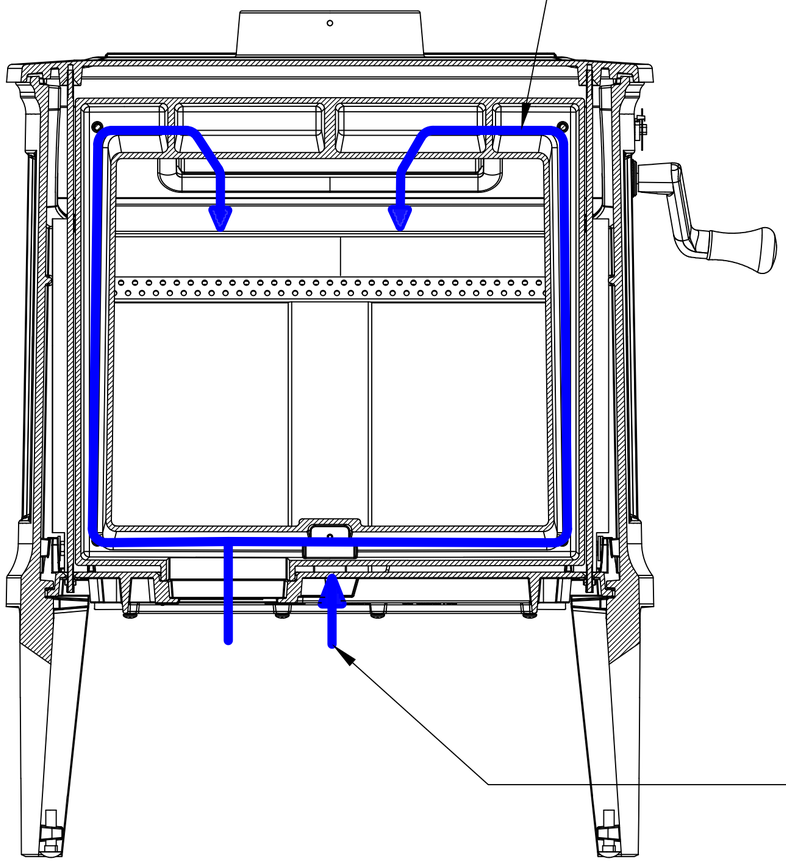

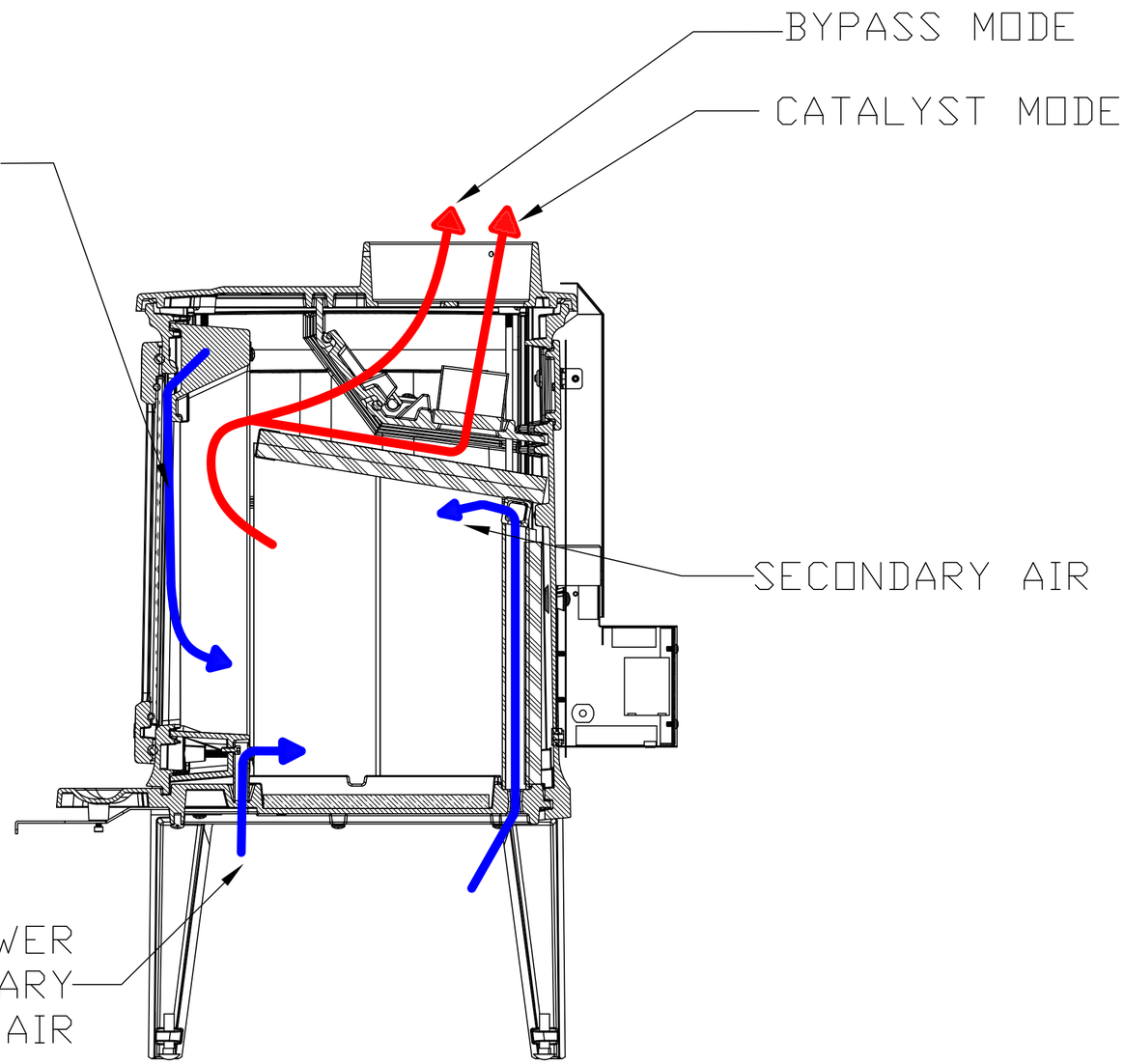

SECTION A

SECTION B

REVISIONS				
ECO	REV.	DESCRIPTION	DATE	APPROVED

VIEWS ARE THIRD ANGLE

This document submitted by HearthStone is the property of HearthStone and may contain information of a proprietary nature and shall not be copied or duplicated in whole or in part or used in whole or in part for any purpose other than that which is necessary for the preparation of bids or fabrication. Please return to HearthStone.

UNLESS OTHERWISE SPECIFIED:
TOLERANCES ARE:
FRACTIONS ± 1/64 DECIMALS .XX ± .015 .XXX ± .005 ANGLES ± 1/4°

1.) DIMENSIONS ARE IN INCHES / MM
2.) ALL MACHINED SURFACES TO BE DE-BURRED AND SMOOTHED

MATERIAL: NA

FINISH: NA

CAD GENERATED DRAWING, DO NOT MANUALLY UPDATE

APPROVALS	DATE
DRAWN	6/12/2017
CHECKED	
RESP ENG	
MFG ENG	
QUAL ENG	

hearthstone

GM40

EPA AIR FLOW

SIZE C | HEARTHSTONE DWG. NO. 8640 | REV. D

SCALE: 1:1 | HERGEM DWG. NO. | SHEET 1 OF 1

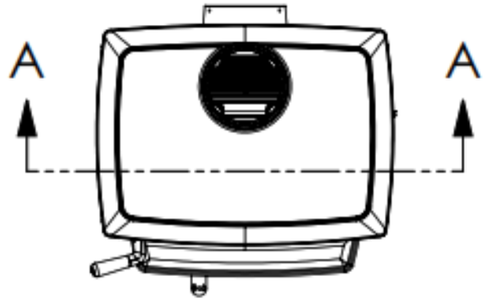

INLET

OUTLET

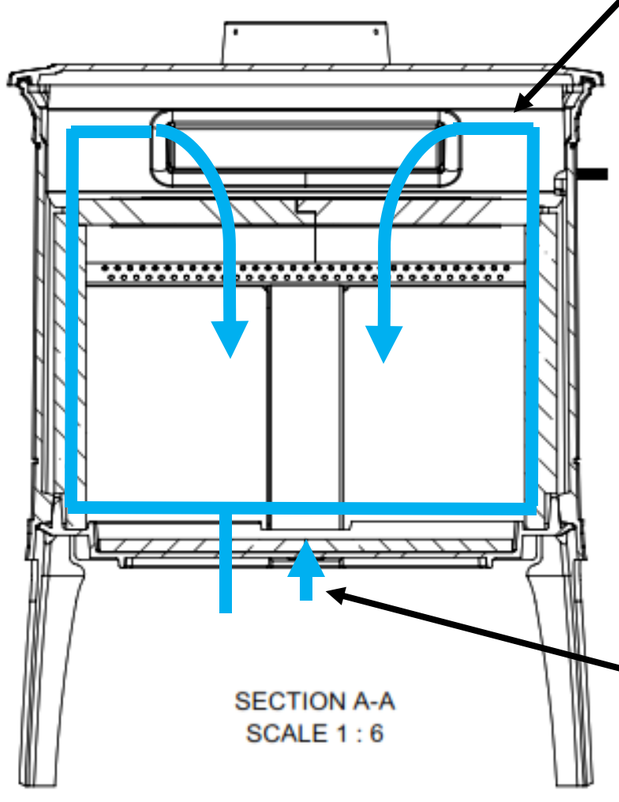

SECTION A-A
SCALE 1 : 6

AIR WASH AIR

LOWER

PRIMARY AIR

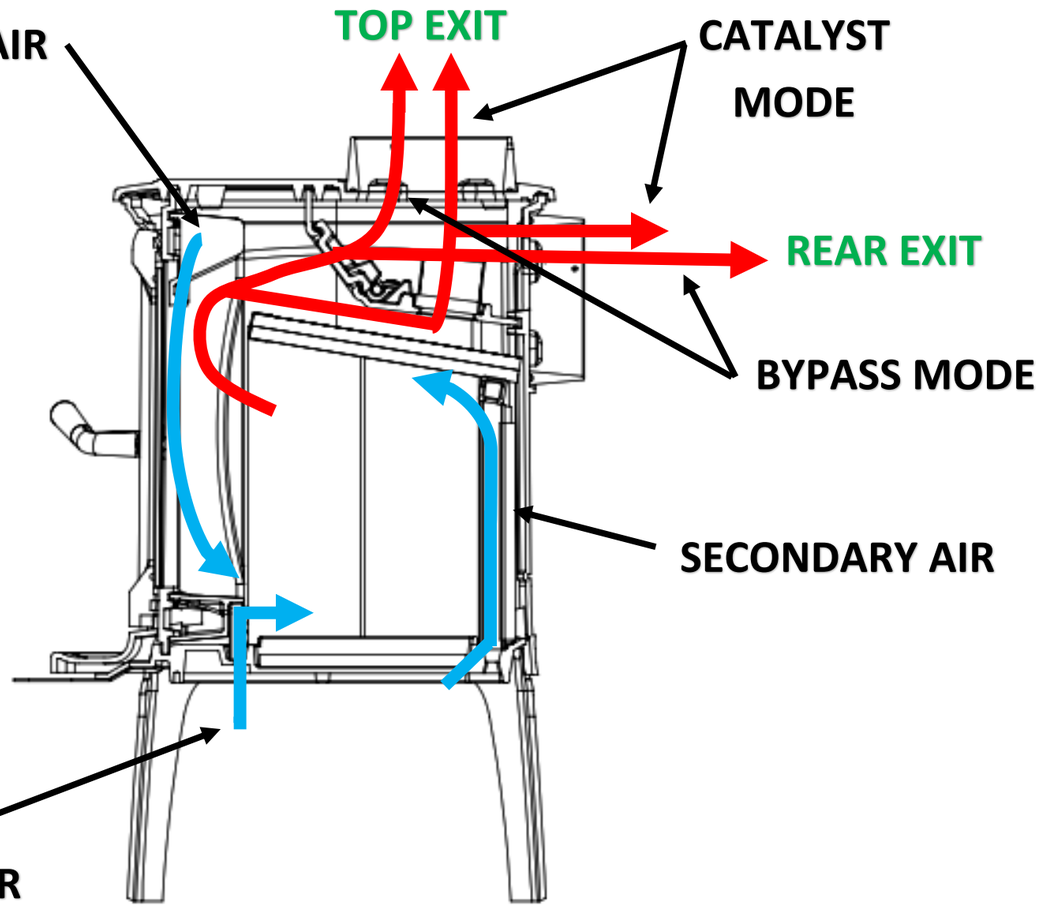

WEIGHT:

REVISIONS				
ECO	REV.	DESCRIPTION	DATE	APPROVED

VIEWS ARE THIRD ANGLE

This document submitted by HearthStone is the property of HearthStone and may contain information of a proprietary nature and shall not be copied or duplicated in whole or in part or used in whole or in part for any purpose other than that which is necessary for the preparation of bids or fabrication. Please return to HearthStone.

UNLESS OTHERWISE SPECIFIED:
TOLERANCES ARE:
FRACTIONS DECIMALS ANGLES
± 1/64 .XX± .015 ± 1/4°
.XXX± .005

1.) DIMENSIONS ARE IN INCHES / MM
2.) ALL MACHINED SURFACES TO BE DE-BURRED AND SMOOTHED

MATERIAL:

FINISH:

CAD GENERATED DRAWING.
DO NOT MANUALLY UPDATE

APPROVALS	DATE
DRAWN	4/22/2019
CHECKED	
RESP ENG	
MFG ENG	
QUAL ENG.	

hearthstone

CRAFTSBURY 2

EPA AIR FLOW

SIZE B | HEARTHSTONE DWG. NO. 8392 | REV.

SCALE: 1:1 | HERGOM DWG. NO. | SHEET 1 OF 1

APPENDIX 15: WHA, COC, 30 days notice, others

United States Environmental Protection Agency

OMB Control No. 2060-0161
Approval expires 03/31/2019

OMB Control No. 2060-0693
Approval expires 03/31/2019

EPA Form 6400-05

Office of Enforcement and Compliance Assurance

30-DAY NOTIFICATION

2015 CLEAN AIR ACT (CAA) STANDARDS OF PERFORMANCE FOR NEW RESIDENTIAL WOOD HEATERS, NEW RESIDENTIAL HYDRONIC HEATERS AND FORCED-AIR FURNACES 40 CFR PART 60 SUBPARTS AAA AND QQQQ

The public reporting and recordkeeping burden for this collection of information is estimated to average 2 hours per response. Send comments on the Agency's need for this information, the accuracy of the provided burden estimates, and any suggested methods for minimizing respondent burden, including through the use of automated collection techniques to the Director, Regulatory Support Division, U.S. Environmental Protection Agency (2822T), 1200 Pennsylvania Ave., NW, Washington, D.C. 20460. Include the OMB control number in any correspondence. Do not send the completed form to this address.

Disclaimer: The statutory provisions and the EPA regulations described in this document contain legally binding requirements. This document is not a substitute for those provisions or regulations, nor is it a regulation itself. In the event of a discrepancy, please refer to 40 CFR PART 60 Subparts AAA AND QQQQ, sections 60.537 and 60.5479. If you have additional questions, please contact Rafael Sanchez at 202-564-7028 or via email at sanchez.rafael@epa.gov.

Instructions: The manufacturer of an affected wood/pellet heater/central heater model line must notify the Administrator of the date that certification testing is scheduled to begin by email to WoodHeaterReports@epa.gov. This notice must be received by the EPA at least 30 days before the start of testing.

GENERAL INFORMATION						
Manufacturer's Name: Hearthstone QHHP						
Heater Type Check one):	☒Adjustable Burn Rate Wood Heater	☐Pellet Stove	☐Single Burn Rate Heater	☐Hydronic Heater	☐Forced Air Furnace	☐Other:
Hydronic Heater Type (Check one):	☐Full Storage	☐Partial Storage	☐Indoor	☐Outdoor	☐Other:	
Forced-Air Furnace Type (Check one):	☐Small (less than 65,000 BTU/hr heat output)		☐Large (greater than 65,000 BTU/hr heat output)			
Fuel Tested (Check one):	☒Crib	☐Pellet	☐Cordwood	☐Wood Chips	☐Other:	
Model Name(s) (as will appear on test report): Green Mountain 40						
Model Number(s) (as will appear on test report): 8640						
Equipped with a catalytic combustor? ☒Yes ☐No						

United States
Environmental Protection
Agency

OMB Control No. 2060-0161
Approval expires 03/31/2019

OMB Control No. 2060-0693
Approval expires 03/31/2019

EPA Form 6400-05

Office of Enforcement and Compliance Assurance

30-DAY NOTIFICATION

2015 CLEAN AIR ACT (CAA) STANDARDS OF PERFORMANCE FOR NEW RESIDENTIAL WOOD HEATERS, NEW RESIDENTIAL HYDRONIC HEATERS AND FORCED-AIR FURNACES 40 CFR PART 60 SUBPARTS AAA AND QQQQ

The public reporting and recordkeeping burden for this collection of information is estimated to average 2 hours per response. Send comments on the Agency's need for this information, the accuracy of the provided burden estimates, and any suggested methods for minimizing respondent burden, including through the use of automated collection techniques to the Director, Regulatory Support Division, U.S. Environmental Protection Agency (2822T), 1200 Pennsylvania Ave., NW, Washington, D.C. 20460. Include the OMB control number in any correspondence. Do not send the completed form to this address.

Disclaimer: The statutory provisions and the EPA regulations described in this document contain legally binding requirements. This document is not a substitute for those provisions or regulations, nor is it a regulation itself. In the event of a discrepancy, please refer to 40 CFR PART 60 Subparts AAA AND QQQQ, sections 60.537 and 60.5479. If you have additional questions, please contact Rafael Sanchez at 202-564-7028 or via email at sanchez.rafael@epa.gov.

Instructions: The manufacturer of an affected wood/pellet heater/central heater model line must notify the Administrator of the date that certification testing is scheduled to begin by email to WoodHeaterReports@epa.gov. This notice must be received by the EPA at least 30 days before the start of testing.

Mailing Address: 317 Stafford Ave.		
Street Address: 317 Stafford Ave.		
City: Morrisville	**State: VT**	**ZIP Code: 05661**
Phone: 802-851-4044	**Fax: NA**	**Web Site: http://www.hearthstonestoves.com/**
Address of Manufacturer: 317 Stafford Ave.		
City: Morrisville	**State: VT**	**ZIP Code: 05661**
EPA APPROVED TEST LABORATORY		
Name and Title of Authorized Representative: Danick Power		
Company: Services Polytests, Inc.		
Phone: 450-741-3636	**E-mail: Dpower@polytests.com**	**Fax: NA**

United States
Environmental Protection
Agency

OMB Control No. 2060-0161
Approval expires 03/31/2019

OMB Control No. 2060-0693
Approval expires 03/31/2019

EPA Form 6400-05

Office of Enforcement and Compliance Assurance

30-DAY NOTIFICATION

2015 CLEAN AIR ACT (CAA) STANDARDS OF PERFORMANCE FOR NEW RESIDENTIAL WOOD HEATERS, NEW RESIDENTIAL HYDRONIC HEATERS AND FORCED-AIR FURNACES 40 CFR PART 60 SUBPARTS AAA AND QQQQ

The public reporting and recordkeeping burden for this collection of information is estimated to average 2 hours per response. Send comments on the Agency's need for this information, the accuracy of the provided burden estimates, and any suggested methods for minimizing respondent burden, including through the use of automated collection techniques to the Director, Regulatory Support Division, U.S. Environmental Protection Agency (2822T), 1200 Pennsylvania Ave., NW, Washington, D.C. 20460. Include the OMB control number in any correspondence. Do not send the completed form to this address.

Disclaimer: The statutory provisions and the EPA regulations described in this document contain legally binding requirements. This document is not a substitute for those provisions or regulations, nor is it a regulation itself. In the event of a discrepancy, please refer to 40 CFR PART 60 Subparts AAA AND QQQQ, sections 60.537 and 60.5479. If you have additional questions, please contact Rafael Sanchez at 202-564-7028 or via email at sanchez.rafael@epa.gov.

Instructions: The manufacturer of an affected wood/pellet heater/central heater model line must notify the Administrator of the date that certification testing is scheduled to begin by email to WoodHeaterReports@epa.gov. This notice must be received by the EPA at least 30 days before the start of testing.

City: St-Jean-Sur Richelieu	**State: Quebec, Canada**	**ZIP Code: J3B-7S7**
EPA APPROVED THIRD-PARTY CERTIFIER		
Name and Title of Authorized Representative: John Steinert, President		
Company: PFS TECO		
Phone: 503-650-0088	**E-mail: jsteinert@dirigolab.com**	**Fax: NA**
City: Clackamas	**State: OR**	**ZIP Code: 97015**
COMPLIANCE TEST INFORMATION		
Test Method(s): EPA Method 28R, ASTM E2515-11, ASTM E2780, CSA B415.1-10		
Date(s) of Proposed Test: March 18-March 20, 2019		

United States
Environmental Protection
Agency

OMB Control No. 2060-0161
Approval expires 03/31/2019

OMB Control No. 2060-0693
Approval expires 03/31/2019

EPA Form 6400-05

Office of Enforcement and Compliance Assurance

30-DAY NOTIFICATION

2015 CLEAN AIR ACT (CAA) STANDARDS OF PERFORMANCE FOR NEW RESIDENTIAL WOOD HEATERS, NEW RESIDENTIAL HYDRONIC HEATERS AND FORCED-AIR FURNACES 40 CFR PART 60 SUBPARTS AAA AND QQQQ

The public reporting and recordkeeping burden for this collection of information is estimated to average 2 hours per response. Send comments on the Agency's need for this information, the accuracy of the provided burden estimates, and any suggested methods for minimizing respondent burden, including through the use of automated collection techniques to the Director, Regulatory Support Division, U.S. Environmental Protection Agency (2822T), 1200 Pennsylvania Ave., NW, Washington, D.C. 20460. Include the OMB control number in any correspondence. Do not send the completed form to this address.

Disclaimer: The statutory provisions and the EPA regulations described in this document contain legally binding requirements. This document is not a substitute for those provisions or regulations, nor is it a regulation itself. In the event of a discrepancy, please refer to 40 CFR PART 60 Subparts AAA AND QQQQ, sections 60.537 and 60.5479. If you have additional questions, please contact Rafael Sanchez at 202-564-7028 or via email at sanchez.rafael@epa.gov.

Instructions: The manufacturer of an affected wood/pellet heater/central heater model line must notify the Administrator of the date that certification testing is scheduled to begin by email to WoodHeaterReports@epa.gov. This notice must be received by the EPA at least 30 days before the start of testing.

Testing Location (Name and Address): Polytests Services Inc. 695 B rue Gaudette, St-Jean-sur-Richelieu Québec, Canada, J3B 7S7 *450.741.3636*	
Contact Name: Danick Power	**Title: VP of Operations**
Phone Number: 450 741-3636	**Email Address: Dpower@polytests.com**

United States
Environmental Protection
Agency

OMB Control No. 2060-0161
Approval expires 03/31/2019

OMB Control No. 2060-0693
Approval expires 03/31/2019

EPA Form 6400-05

Office of Enforcement and Compliance Assurance

30-DAY NOTIFICATION

2015 CLEAN AIR ACT (CAA) STANDARDS OF PERFORMANCE FOR NEW RESIDENTIAL WOOD HEATERS, NEW RESIDENTIAL HYDRONIC HEATERS AND FORCED-AIR FURNACES 40 CFR PART 60 SUBPARTS AAA AND QQQQ

The public reporting and recordkeeping burden for this collection of information is estimated to average 2 hours per response. Send comments on the Agency's need for this information, the accuracy of the provided burden estimates, and any suggested methods for minimizing respondent burden, including through the use of automated collection techniques to the Director, Regulatory Support Division, U.S. Environmental Protection Agency (2822T), 1200 Pennsylvania Ave., NW, Washington, D.C. 20460. Include the OMB control number in any correspondence. Do not send the completed form to this address.

Disclaimer: The statutory provisions and the EPA regulations described in this document contain legally binding requirements. This document is not a substitute for those provisions or regulations, nor is it a regulation itself. In the event of a discrepancy, please refer to 40 CFR PART 60 Subparts AAA AND QQQQ, sections 60.537 and 60.5479. If you have additional questions, please contact Rafael Sanchez at 202-564-7028 or via email at sanchez.rafael@epa.gov.

Instructions: The manufacturer of an affected wood/pellet heater/central heater model line must notify the Administrator of the date that certification testing is scheduled to begin by email to WoodHeaterReports@epa.gov. This notice must be received by the EPA at least 30 days before the start of testing.

Dale Ward, Operations Manager, Hearthstone QHHP

Print Name and Title of Authorized Official

Signature

1/9/19

Date

Telephone Number: 802-851-4269

Email Address: dward@hearthstonestoves.com

Remarks: This 30 day notice is for equivalency testing of an alternate catalyst only.

v1

UNITED STATES ENVIRONMENTAL PROTECTION AGENCY
WASHINGTON, D.C. 20460

OFFICE OF
ENFORCEMENT AND
COMPLIANCE ASSURANCE

May 26, 2022

Mr. Simon Booth
Engineering Lab Manager
Quality Manager
Hearthstone QHHP, Inc.
317 Stafford Avenue
Morristown, VT 05661

Re: Request for Revised Certification Test Report to Address Documentation Problems or Irregularities – Green Mountain 40 8640, Craftsbury 2 8392, and Hipster 14 AMB8240 Hybrid Wood Heater Models; Certificate of Compliance Number 210-19

Dear Mr. Booth:

The United States Environmental Protection Agency (EPA) has completed a post-certification review of the Hearthstone QHHP, Inc. certification test report, dated April 2, 2019,[1] and submitted to receive a Certificate of Compliance for the above-referenced wood heater models. As discussed below, this review found problems or irregularities that continue to be in the revised certification test report documentation. EPA is requesting that you address these remaining problems or irregularities by further revising the test report to include all required information pertaining to a valid certification test. If a revised test report is not submitted as requested and within the time allotted, EPA may at its discretion determine that the certification test was not valid, which would serve as the basis for revoking the Certificate of Compliance in accordance with the 2015 New Source Performance Standard (NSPS) for New Residential Wood Heaters, New Residential Hydronic Heaters and Forced-Air Furnaces at 40 CFR Part 60, Subpart AAA (2015 NSPS) at 40 C.F.R. § 60.533(l).

The 2015 Wood Heater Rule authorizes EPA to issue a Certificate of Compliance upon a manufacturer submitting all required documentation pertaining to a valid certification test. Such documentation must include a complete test report providing information for all test runs, including raw data sheets, laboratory technician notes, calculations, and test results. In addition, the documentation must include the items specified in the applicable test methods. See 40 C.F.R. § 60.533(b)(5). Upon subsequent review of the certification test report, however, EPA determined that certain required test report information was missing and/or requires clarification. Therefore, EPA requests that you revise the test report to include the following additional information to maintain the Certificate of Compliance for the

[1] Revised on November 24, 2020 and January 20th, 2021.

above-referenced models.

Test Report Problems or Irregularities	Regulatory Citation and/or Test Method	Information Needed to Address Problems or Irregularities
Missing Information – Conditioning Burn Data.	40 CFR § 60.533(b)(5) ASTM E2780 (9.1.3-6)	Include in the revised test report complete conditioning data including: fuel moisture data for each piece, correct heat draw, air damper positioning, and timing.
Missing Information – Temperature Sensor Location.	ASTM E2515 (6.1.6) (Figure 4)	Include in the revised test report the temperature probe location.
Inconsistent Information – Dimensions of the Dilution Tunnel.	ASTM E2515 (6.1.6) (Figure 4)	Include in the revised test report clarification of the dimensions of the dilution tunnel and ensure consistency between dimensions indicated in photos and used in calculations within the report.
Missing Information – Discussion of Negative Weights.	40 CFR § 60.534(d)	Include in the revised test report discussion of the handling of negative weights in the filter data.

We request that you submit both a revised confidential business information (CBI)[2] and non-CBI test report along with a revised Certification of Conformity to EPA within ten (10) business days of receipt of this letter to maintain the Certificate of Compliance for the above-referenced models. The revised test report (both CBI and non-CBI versions) and Certification of Conformity should be clearly identified as revised with a revision date provided. The revised test report and Certification of Conformity should include a summary table indicating what revisions have been made and where the revisions are located in the test report. Concurrently, you must post the revised non-CBI test report on your website and provide to EPA the web address where the report can be found.

Upon receipt, EPA will review the revised test report (CBI and non-CBI versions) to determine if the revisions sufficiently address the identified problems or irregularities and verify that the non-CBI report has been posted on your website. Please submit the revised test report (both CBI and non-CBI versions) to WoodHeaterReports@epa.gov. The subject line of your email should be marked as "Wood Heater Test Report Requested Information."

[2] Manufacturers who claim that some of the information being submitted is CBI (e.g., design drawings and sensitive, detailed material specifications) must clearly mark the information. Note that emissions data cannot be claimed as CBI, including all information necessary either to determine emission rates in the format of the standard (e.g., g/hr, lb/mmBtu) or to determine whether the source complies with an applicable standard or limitation). See 40 CFR 2.301(a)(2) https://www.govinfo.gov/content/pkg/CFR-2013-title40-vol1/pdf/CFR-2013-title40-vol1-sec2-301.pdf.

Please note that we are in receipt of your October 28, 2020 request for catalyst equivalency for the above-referenced models. However, your request cannot be processed until the above-identified test report problems or irregularities have been sufficiently addressed and the revised non-CBI test report posted on your website. Once a revised non-CBI test report addressing the identified problems or irregularities has been posted, EPA will continue to process your request for catalyst equivalency and the February 1, 2021, catalyst equivalency test report submitted in support of your request.

This request has been coordinated with EPA's Office of Air Quality Planning and Standards and the Office of General Counsel. If you have any questions regarding this letter, please contact the Wood Heater Program at WoodHeaterReports@epa.gov.

Sincerely,

Elizabeth Vizard
Acting Director
Monitoring, Assistance, and Media Programs Division
Office of Compliance
Office of Enforcement and Compliance Assurance

cc:

Richard A. Wayland, OAQPS/AQAD
Steffan M. Johnson, OAQPS/MTG
Jacqueline Robles Werner, OC
Robert Scinta, OC/MAMPD
Scott Jordan, OGC/ARLO
Danick Power, Polytests Services Inc.

UNITED STATES ENVIRONMENTAL PROTECTION AGENCY
WASHINGTON, DC 20460

OFFICE OF
COMPLIANCE

DEC 15 2016

Chris Neufeld
Vice President
Blaze King Industries, Inc.
146 A Street
Walla Walla, Washington 99362

RE: Blaze King Industries, Inc. (Blaze King) Request for Catalyst Suitable Replacement Procedures

Dear Mr. Neufeld:

This letter is in response to the February 3, 2016, Blaze King letter requesting the United States Environmental Protection Agency (EPA) implement a program to allow catalyst equipped wood heater manufacturers and suppliers to seek suitable replacement status during the life cycle of the product. As discussed below, replacement catalysts may be used if equivalency is properly demonstrated.

To have a catalyst deemed suitable for replacement, equivalency testing must be conducted by an EPA-approved test laboratory. Consistent with the 2015 Standards of Performance for New Residential Wood Heaters, New Residential Hydronic Heaters and Forced-Air Furnaces (Subpart AAA) (2015 Standards), the manufacturer must notify the EPA of the date that certification testing (catalyst equivalency testing) is scheduled to begin as stated in Section 60.534(g). This notice must be received by the EPA at least 30 days before the start of testing. EPA will consider the following steps to be adequate to demonstrate replacement catalyst equivalency:

1) The manufacturer uses the same test method as the original certification test was conducted. If the original certification test method is no longer valid, the manufacturer requests an alternative test method prior to testing.

2) The replacement catalyst is aged 50 hours prior to catalytic equivalency testing. The catalyst is tested in the same model or model line unit in which the original catalyst was tested.

3) Both a Category 1 run and Category 4 run are conducted by an EPA-approved test laboratory.

4) The new Category 1 run is compared to the original Category 1 run, and the new Category 4 run is compared to the original Category 4 run. The new runs are not more than 0.5 grams/hour greater than the original certification test results for each run. They are compared separately, with no averaging. In equation form:

Replacement catalyst category 1 ≤ (original catalyst category 1 + 0.5g/hr)

AND

Replacement catalyst category 4 ≤ (original catalyst category 4 + 0.5g/hr)

As noted in Section 60.533(k)(4)[1], the EPA Administrator must approve the change in the catalyst in advance, with proper documentation of the equivalency testing. This documentation consists of the original certification test report category 1 and 4 data and the new category 1 and 4 test data results. All demonstration test data must be sent to WoodHeaterReports@epa.gov within 60 days after the date of completing the test. EPA considers the catalyst equivalency testing to be a form of certification testing governed by the provisions in Section 60.534.

The EPA finds the request outside the scope of an applicability determination. The term "applicability determination" is limited to the Agency's formal decisions, issued in response to a non-hypothetical and site-specific request about the applicability of a specific rule to a specific facility. Therefore, the EPA considers this response to be a regulatory interpretation to a source request for clarification.[2]

This response has been prepared in consultation with the Office of Air Quality, Planning, and Standards, and the Office of General Counsel. If you have any questions, please contact Rafael Sanchez of my staff at 202-564-7028 or email at sanchez.rafael@epa.gov.

Sincerely,

Edward J. Messina

Edward J. Messina, Director
Monitoring, Assistance, and Media Programs Division
Office of Compliance

[1] A change in the make, model or composition of a catalyst is presumed to affect particulate matter and carbon monoxide emissions and efficiency, unless the change has been requested by the heater manufacturer and has been approved in advance by the Administrator, based on test data that demonstrate that the replacement catalyst is equivalent to or better than the original catalyst in terms of particulate matter emission reduction.
[2] This regulatory interpretation updates EPA Applicability Determination WDS-138 (July 6, 1990).

cc: Amanda Aldridge, OAQPS
Adam Baumgart-Getz, OAQPS
Mike Toney, OAQPS
Scott Jordan, OGC
Sara Ayres, OC

Simon Booth
Hearthstone QHHP, Inc.
317 Stafford Ave.
Morrisville, VT 05661
802-851-4044

11/7/23

Rafael Sanchez, Ph.D.
Wood Heater Program Lead
Air Branch
Monitoring, Assistance, and Media Programs Division
Office of Compliance
U.S. Environmental Protection Agency (EPA)
Room 7149-D
1200 Pennsylvania Ave., NW
MS: 2227A
Washington, DC 20004

RE: Request for Re-certification, Letter 210-19

Dear Mr. Sanchez,

Under the U.S. Environmental Protection Agency 40 CFR part 60 Standards for performance of New Stationary Sources; New Residential Wood Heaters; Final Rule, SECTION 60.533(j)(ii)(2), Hearthstone Quality Home Heating Products is applying for the renewal of certification for appliance model Green Mountain 40 8640 (also containing models Craftsbury 2 8392, Hipster 14 AMB8240) , Certification number 210-19 certification date July 19, 2019, expiring on July 30th, 2024.

Hearthstone Quality Home Heating Products affirms that the Green Mountain 40 8640 continues to meet all the requirements for certification set forth in 40 CFR Part 60, Section 60.533(e). Accordingly, we request that the agency waive any requirement for recertification testing.

We request to receive written notification verifying renewal as soon as possible to allow for action to be taken if the request has been denied.

Sincerely,

Simon Booth
Engineering Manager
Hearthstone QHHP, Inc.

UNITED STATES ENVIRONMENTAL PROTECTION AGENCY
WASHINGTON, DC 20460

OFFICE OF
ENFORCEMENT AND
COMPLIANCE ASSURANCE

SEP 12 2017

Justin White
Product Development Manager
Hearthstone QHHP
317 Stafford Avenue
Morrisville, Vermont 05661

Re: Green Mountain 40 8640 Wood Heater Model Certification Letter Number 93-17

Dear Mr. White:

I am pleased to inform Hearthstone QHHP (Hearthstone) that the above-referenced model has been approved for certification pursuant to the 2015 New Source Performance Standard (NSPS) for New Residential Wood Heaters, New Residential Hydronic Heaters and Forced-Air Furnaces at 40 CFR Part 60, Subpart AAA (2015 NSPS) by the United States Environmental Protection Agency (EPA). Certification under the 2015 NSPS is valid through September 14, 2022. This letter serves as your wood heater certification and no separate certification is required. Please refer to the certification letter number above in all future correspondence.

Based on a June 9, 2017 test report prepared by Services Polytests Inc. and the information provided in your June 16, 2017 application, the above-referenced model is certified as meeting the 2015 NSPS. Under the 2015 NSPS and based on Dirigo Laboratories Inc.'s June 29, 2017 certification of conformity, the model's emission rate of 0.90 g/hr meets the 2020 NSPS particulate matter emissions limit of 2.0 g/hr. The heat output range and overall heating efficiency for the above-referenced model are 14,142 – 23,935 BTU/hr and 77%, respectively. The carbon monoxide emission rate for this model line is 0.67 g/Min.

This certification is valid for the above-referenced model and cannot be transferred to another model line without applying for certification. This certification allows Hearthstone to manufacture and sell the above-referenced model through September 14, 2022. Thereafter, Hearthstone may not manufacture, advertise for sale, offer for sale, or sell wood heaters under this certification without applying for and obtaining another compliance certification.

All wood heaters manufactured or sold under this certification must comply with EPA labeling requirements found at §60.536. These provisions require each wood heater to have a permanent label affixed to it that includes the month and year of manufacture, model name or number, serial number, certification test emission value, test method, standard met, and compliance certification statement.

In addition, Hearthstone must comply with all applicable requirements of the regulation, including:

1. Conducting a third-party certifier-approved quality assurance program which ensures that all units within a model line are similar to the wood heater submitted for certification testing in all respects that would affect emissions and are in compliance with the applicable emission limit, pursuant to §60.533(m);

2. Applying for recertification whenever any change is made to the above-referenced model that affects or is presumed to affect the particulate matter emission rate for the model line, pursuant to §60.533(k)(1);

3. Providing an owner's manual that includes the information listed in §60.536(g)(1) with each affected wood heater model offered for sale;

4. Placing a copy of the certification test report and summary on the manufacturer's website. The test report and summary shall be available to the public within 30 days after the EPA issues a certificate of compliance, pursuant to §60.533(b)(12);

5. Submitting a report to the EPA every 2 years following issuance of a certificate of compliance for each model line. This report must include the sales for each model by state and certify that no changes in the design or manufacture of this model line have been made that require recertification under §60.533(k);

6. Retaining records and submitting reports as required at §60.537; and

7. Submitting wood heaters for audit testing if selected by the EPA under §60.533(n)(1)(i) and (2)(i).

Failure to comply with these requirements may result in a revocation of this approval and an enforcement action, including penalties as specified under the Clean Air Act.

To promote transparency in the certification program, we suggest that manufacturers submit the Uniform Resource Locator (URL) or web address where the test report is posted to WoodHeaterReports@epa.gov within ten (10) days of posting the test report.

If you have any questions concerning this letter, please contact Rafael Sanchez of my staff at (202) 564-7028 or via email at sanchez.rafael@epa.gov.

Sincerely,

Edward J. Messina, Director
Monitoring, Assistance, and Media Programs Division
Office of Compliance

Danick Power

De: Toney, Mike <Toney.Mike@epa.gov>
Envoyé: 28 février 2019 07:31
À: Danick Power; Sanchez, Rafael
Cc: Dave Bryant; Kyle Walker
Objet: RE: Catalyst Equivalency testing

Hi Danick,

I am fine with the low burn not being able to meet category 1 and resulting in category 2, and one high burn. Rafael has the final authority though. He will have to grant permission.

From: Danick Power <dpower@polytests.com>
Sent: Wednesday, February 27, 2019 3:52 PM
To: Toney, Mike <Toney.Mike@epa.gov>; Sanchez, Rafael <Sanchez.Rafael@epa.gov>
Cc: Dave Bryant <DBryant@hearthstonestoves.com>; Kyle Walker <KWalker@hearthstonestoves.com>
Subject: RE: Catalyst Equivalency testing

Mike,

Following discussion with Dave Bryant at Hearthstone for Catalyst equivalent testing. We have the question below.

For the equivalence testing can we run below tests

- 1 minimum burn rate (will end into a category 2). The original stove couldn't burn in category 1 (less than 0.8kg/hr)
- 1 maximum burn rate

Thank you
Best regards,

Danick Power P. Eng.
Vice-President Operations

Polytests Services Inc.
695 B rue Gaudette,
St-Jean-sur-Richelieu
Québec, Canada, J3B 7S7
450.741.3636
www.polytests.com

This email and any files transmitted with it are confidential and intended solely for the use of the individual or entity to whom they are addressed. If you have received this email in error, please notify the system manager. This message contains confidential information and is intended only for the individual named. If you are not the named addressee, you should not disseminate, distribute or copy this email. Please notify the sender immediately by email if you have received this email by mistake and delete this email from your system. If you are not the intended recipient, you are notified that disclosing, copying, distributing or taking any action in reliance on the contents of this information is strictly prohibited.

De : Dave Bryant <DBryant@hearthstonestoves.com>
Envoyé : 11 février 2019 06:01
À : Danick Power <dpower@polytests.com>
Cc : Dave Kuhfahl <DKuhfahl@hearthstonestoves.com>
Objet : FW: Catalyst Equivalency testing

FYI…….

From: Sanchez, Rafael <Sanchez.Rafael@epa.gov>
Sent: Friday, February 8, 2019 5:52 PM
To: Dave Bryant <DBryant@hearthstonestoves.com>
Cc: Toney, Mike <Toney.Mike@epa.gov>
Subject: RE: Catalyst Equivalency testing

Hi Dave, I concur with Mike's opinion.

From: Toney, Mike
Sent: Friday, February 8, 2019 7:50 AM
To: Sanchez, Rafael <Sanchez.Rafael@epa.gov>
Cc: DBryant@hearthstonestoves.com
Subject: RE: Catalyst Equivalency testing

Hi Rafael,

This would be acceptable since the stove could not burn less than .80Kg/hr.

From: Sanchez, Rafael
Sent: Thursday, February 07, 2019 3:05 PM
To: Toney, Mike <Toney.Mike@epa.gov>
Cc: DBryant@hearthstonestoves.com
Subject: FW: Catalyst Equivalency testing

Hi Dave,

I am forwarding your email to Mike Toney (OAQPS) for his opinion. Thanks.

From: Dave Bryant <DBryant@hearthstonestoves.com>
Sent: Thursday, February 07, 2019 3:00 PM
To: Sanchez, Rafael <Sanchez.Rafael@epa.gov>
Cc: Danick Power <dpower@polytests.com>; Dave Kuhfahl <DKuhfahl@hearthstonestoves.com>
Subject: FW: Catalyst Equivalency testing

Dear Dr. Sanchez,

I'm touching base to see if you had looked at our request (below)
for catalyst equivalency testing.

(I apologize for pestering you, especially given the gov't shutdown backlog
you are dealing with)

Thanks,

Dave Bryant

From: Dave Bryant
Sent: Monday, January 14, 2019 2:11 PM
To: 'Sanchez.Rafael@epa.gov' <Sanchez.Rafael@epa.gov>
Cc: 'Danick Power' <dpower@polytests.com>
Subject: Catalyst Equivalency testing

Dear Dr. Sanchez,

Please find our attached 30 day notice for catalyst equivalency testing
for the Hearthstone Green Mountain 40 (model 8640).

Referencing the attached correspondence with Blaze King regarding
catalyst equivalency testing, may I assume that if the original stove under test
was not able to achieve a burn rate below .80 kg/hr. (Category 1), that
2 tests, one of which is below 1.00 kg/hr. (Category 2) would be acceptable
to prove catalyst equivalency?

Best Regards,
Dave Bryant
Product Development Engineer
Hearthstone QHHP

St-jean-sur-Richelieu, September 8th 2021

Att.: Rafael Sanchez, Steffan Johnson

Subject: TYPO, mixing baffle in template report

In our report template we forgot to remove the reference of the mixing baffle in the dilution tunnel in the description section 3.1 and in the drawing in appendix 8 for our report template. This TYPO will can be found in most of our EPA reports. In reality the mixing baffles has been removed from the tunnel in 2015 when the E.P.A. review the regulation and refer to the ASMTE2515 for sampling standard. Our Iso 17025 accreditor (IAS) has audited Polytests for the ASMT E2515 and other testing method in March 2015 and found the dilution tunnel compliant to the standard (no mixing baffle in place). Moreover, we have been audited every two years by the EPA proficiency testing and dilution tunnel have been dismantling and inspected by the auditor and no mixing baffle was in the dilution tunnels. In order to fix this issue, reports are updated to remove the TYPO and updated the drawing of the dilution tunnel in appendix 8.

Thank you
Best regards,

Danick Power
Polytests services inc.
695-B Gaudette
St-jean-sur-richelieu
J3B 7S7
Phone. : 450 741-3636
e-mail: infos@polytests.com

John Steinert
Vice President Hearth Products Division
PFS TECO
11785 SE Hwy 212 - Ste 305
Clackamas, OR 97015
john.steinert@pfsteco.com
503-650-0088

International Accreditation Service, Inc.
3060 Saturn Street, Suite 100
Brea, CA 92821-1732 USA
tel: 562.364.8201
tel: 866.427.4422
fax: 562.699.8031
www.iasonline.org

IAS Laboratory Assessment Report

File or TL No.: File 2014-12-10

Laboratory Name: Services Polytests, Inc.

Laboratory Address: 695B Gaudette, St. Jean-sur-Richelieu, Quebec, J3B 7S7, Canada

Name and Title of Laboratory Contact: Gaetan Piedalue, P. Eng.; President

Name of Assessor: Douglas Sickles, P.E.

Date(s) of Assessment: March 16-20, 2015

Use this space to record names and titles of persons present at opening meeting:

Services Polytests : Gaetan Piedalue, P. Eng.; President ; Danick Power, VP, Operation Manager; Marie-Josee Brudeau, Quality Manager

IAS: Douglas Sickles, P.E.

Use this space to record names and titles of persons present at closing meeting:

Services Polytests : Gaetan Piedalue, P. Eng.; President ; Danick Power, VP, Operations Manager

IAS: Douglas Sickles, P.E.

Signature of Laboratory Representative:

Signature of Assessor:

Reviewer Comments:

Reviewed by:
Date:

Report	Date	Client	Product	Standards	Tested By:	Reviewer
P-1164	12-2012	ICC	Chimney Liner	ULC S640, UL 1777	Alain Lefebvre	Danick Power
P-1223	10-2014	ICC	Flexible Liner	ULC S640, UL 1777	Alain Lefebvre	Danick Power
P-1231	12-2014	ESIM	Automatically fed pellet/wood chip fired boiler	CSA B366.1 CSA B415.1 UL 2523 EPA Method 28 WHH ASTM 2515A	Maxime Martin	Danick Power
P-1246	11-2014	JA Roby	Wood Stove	UL 1482, ULC S627		Danick Power

TEST METHODS DEMONSTRATED AND REVIEWED:

Test methods demonstrated: (many tests shared between standards)

Test Standard/Method	Title
ANSI/UL 1482	Solid Fuel Type Room Heaters
CAN/ULC S627	Standard for Space Heaters for use with Solid Fuels
ASTM E1509	Standard Specification for Room Heaters, Pellet Fuel Burning type
CAN/CSA B366.1	Solid Fuel Fired Heating Appliances
CAN/CSA B415	Performance Testing of Solid Fuel Burning Heating Appliances
ASTM E2515	Determination of particulate matter collected by a dilution tunnel

Test methods that involved interviews and equipment review:

Test Standard/Method	Title
ULC S628	Fireplace Inserts
ANSI/UL 2523	Solid Fuel Fired Hydronic Heating Appliances, Water Heaters and Boilers
CAN/ULC S610	Standard for Factory Built Fireplaces
ANSI/UL 127	Factory Built Fireplaces
ANSI/UL 391	Solid Fuel and Combination Fuel Central and Supplementary Furnaces"
CAN/ULC S632	Standard for Heat Shields
ANSI/UL 1618	Wall protectors, floor protectors and hearth extensions
EPA 40 CFR Part 60, Subpart AAA, Method 28R	Certification and Auditing of Wood Heaters
EPA 40 CFR Part 60, Subpart QQQ, Method 28WHH	Measurement of Particulate Emissions and Heating Efficiency of Wood-Fired Hydronic Heating Appliances
E2558,E2618, E2779, E2780	Particulate Matter Emissions for Wood, heaters, Pellet heaters, Boilers, Wood Fireplaces
ULC S604	Standard for Factory-Built type A Chimneys
ULC S629	Standard for 650°C Factory-Built Chimneys
UL 103	Factory-Built Chimneys for Residential type and Building Heating Appliances
ULC S640	Standard for Lining Systems for New Masonry Chimneys
ULC S641	Standard for Factory-Built Chimney connectors and wall pass-through assemblies
UL 1777	Chimney Liners
ULC S635	Standard for Lining Systems for Existing Masonry or Factory-Built Chimneys and Vents

UNITED STATES ENVIRONMENTAL PROTECTION AGENCY
WASHINGTON, DC 20460

OFFICE OF
ENFORCEMENT AND
COMPLIANCE ASSURANCE

October 14, 2020

Mr. Simon Booth
Hearthstone QHHP, Inc.
317 Stafford Avenue
Morrisville, Vermont 05661

Re: Updated Certification Letter Number 210-19 for Green Mountain 40 8640, Craftsbury 2 8392, and Hipster 14 AMB8240 Hybrid Wood Heater Models

Dear Mr. Booth:

The United States Environmental Protection Agency (EPA) is in receipt of your July 7, 2020, letter regarding the above-referenced certificate of compliance letter. This certificate currently includes the Green Mountain 40 8640 and Craftsbury 2 8392 Hybrid models. Hearthstone QHHP, Inc. (Hearthstone) is requesting that the above-referenced certificate be updated to add the Hipster 14 AMB8240 model. According to Hearthstone, the Hipster 14 AMB8240 model will be manufactured exactly the same as the current certified models except for cosmetic changes to the outer cast iron body of the heater. Hearthstone affirms that the above-referenced design changes will not cause wood heaters within the model line to exceed applicable emission limits.

In accordance with the 2015 Wood Heater Rule, a manufacturer must recertify a model line whenever any change is made in the design that affects or is presumed to affect the particulate emission rate for that model (Sections §60.533(k)(1) and (k)(2)). However, pursuant to the Rule, EPA may waive the recertification requirement if the manufacturer presents adequate rationale, and EPA determines that the change may not reasonably be anticipated to cause heaters in the model line to exceed the applicable emission limits.

Based on an April 2, 2019, test report by Services Polytests Inc., a July 7, 2020, certificate of conformity by PFS TECO, and the information provided in your July 7, 2020, letter, EPA has determined that the proposed changes are unlikely to cause the model line to exceed the emission rate of 1.1 g/hr. An emission rate of 1.1 g/hr meets the 2020 New Source Performance Standard (NSPS) for New Residential Wood Heaters, New Residential Hydronic Heaters and Forced-Air Furnaces at 40 CFR Part 60, Subpart AAA particulate matter emission limit of 2.0 g/hr. Therefore, pursuant to §60.533(k)(1), EPA is waiving certification testing for the Hipster 14 AMB8240 model, and we have updated the above-referenced certificate number and the EPA Wood Heater Database to include the new model name. Please refer to the above-referenced certification letter number in all future correspondence.

This certification is valid for the above-referenced models and cannot be transferred to another model line without applying for certification. This certification allows Hearthstone to manufacture and sell the

above-referenced models through July 31, 2024. Thereafter, Hearthstone may not manufacture, advertise for sale, offer for sale, or sell wood heaters under this certificate without applying for and being issued another compliance certification.

All wood heaters manufactured or sold under this certification must comply with EPA labeling requirements found at §60.536. These provisions require each wood heater to have a permanent label affixed to it that includes the month and year of manufacture, model name or number, serial number, certification test emission value, test method, standard met, and compliance certification statement.

In addition, Hearthstone must comply with all applicable requirements of the regulation, including:

1. Conducting a third-party certifier-approved quality assurance program which ensures that all units within a model line are similar to the wood heater submitted for certification testing in all respects that would affect emissions and are in compliance with the applicable emission limit, pursuant to §60.533(m);

2. Applying for recertification whenever any change is made to above-referenced models that affect or is presumed to affect the particulate matter emission rate for the model line, pursuant to §60.533(k)(1);

3. Submitting a report to the EPA every two years following issuance of a certificate of compliance for each model line. This report must include the sales for each model by state and certify that no changes in the design or manufacture of this model line have been made that require recertification under §60.533(k);

4. Retaining records and submitting reports as required at §60.537; and

5. Submitting wood heaters for audit testing if selected by the EPA under §60.533(n)(1)(i) and (2)(i).

Failure to comply with these requirements may result in a revocation of this certification and enforcement action, including penalties as specified under the Clean Air Act. If you have any questions concerning this letter, please contact Rafael Sanchez of my staff at (202) 564-7028 or via email at sanchez.rafael@epa.gov.

Sincerely,

Martha Segall
Acting Director
Monitoring, Assistance, and Media Programs Division
Office of Compliance

U.S. ENVIRONMENTAL PROTECTION AGENCY (EPA)
2015 Standards of Performance for New Residential Wood Heaters, New Residential Hydronic Heaters and Forced-Air Furnaces Application
40 CFR PART 60 SUBPARTS AAA AND QQQQ

Disclaimer: The statutory provisions and the EPA regulations described in this document contain legally binding requirements. This document is not a substitute for those provisions or regulations, nor is it a regulation itself. In the event of a discrepancy, please refer to 40 CFR PART 60 Subparts AAA AND QQQQ, Sections 60.533(b), 60.5475(b), and Appendix A–8. This document may be revised periodically without public notice. If you have additional questions, please contact Rafael Sanchez at 202-564-7028 or via email at sanchez.rafael@epa.gov.

Contents

Application for us epa wood heater certification pursuant to 40 cfr PART 60 Subparts AAA and QQQQ **1**

Application for A Certificate of Compliance pursuant to 40 cfr PART 60 Subparts AAA and QQQQ **2**

2015 Standards of PerfoRmance for New Residential Wood Heaters, new residential hydronic heaters and forced-air furnaces **2**

General Information 2

Manufacturer's Authorized Representative INFORMATION 2

EPA-Approved Test Laboratory 3

Compliance Statements and Acknowledgements – Sections 60.533(b) and 60.5475(b) 4

Instructions: Please read the below statements and affirmations and address accordingly 4

For emissions data summary tables see attachments 4

Wood Burning Heaters **7**

I. Test Method 28R for Certification and Auditing of Wood Heaters 7

A. Summary Results – Adjustable Wood Burning Heaters 7

APPLICATION FOR A CERTIFICATE OF COMPLIANCE PURSUANT TO 40 CFR PART 60 SUBPARTS AAA AND QQQQ

2015 STANDARDS OF PERFORMANCE FOR NEW RESIDENTIAL WOOD HEATERS, NEW RESIDENTIAL HYDRONIC HEATERS AND FORCED-AIR FURNACES

GENERAL INFORMATION

Manufacturer's Name: Hearthstone Quality Home Heating Products

Heater Type (Circle One):	Adjustable Burn Rate Wood Heater	Pellet Stove	Single Burn Rate Heater	Hydronic Heater	Forced Air Furnace	Other:
Hydronic Heater Type (Circle One):	Traditional	Full Storage	Partial Storage	Indoor/Outdoor	Other:	
Forced-Air Furnace Type (Circle One):	Small (less than 65,000 BTU/hr heat output)		Large (greater than 65,000 BTU/hr heat output)		Other:	
Fuel Tested:	Crib	Pellet	Cordwood	Wood Chips	Other:	

Test Method(s) ASTM E2780-10 ; ASTM E2515-11 methods 28R as referred into 40 CFR	**Catalyst: Yes**

Model Name and Design Number (The model name and design number must clearly distinguish one model from another. The name and design number cannot include the EPA symbol or logo or name or derivatives such as "EPA):
Green Mountain 40 8640
Craftsbury 2 8392
Hipster 14 AMB8240

Physical Address (Street number and Address, not P.O. Box): **317 STAFFORD AVE**	**Mailing Address:** **317 STAFFORD AVE**

City: **MORRISVILE**	**State:** **VERMONT**	**ZIP Code:** **05661**
Phone: **1877-877-2113**	**Email:** **warm@hearthstonestoves.com**	**Website:** **https://www.hearthstonestoves.com/**

EPA Submission Date of 30 day Notice: 1/9/2019

MANUFACTURER'S AUTHORIZED REPRESENTATIVE INFORMATION

Name: SIMON BOOTH

Position/Title: ENGINEERING MANAGER

Address: 317 STAFFORD AVE

City: MORRISVILLE	**State: VT**	**ZIP Code: 05661**
Phone: 802-851-4044	**E-mail:** **SBOOTH@HEARTHSTONESTOVES.COM**	**Website:** **https://www.hearthstonestoves.com/**

APPLICATION FOR A CERTIFICATE OF COMPLIANCE PURSUANT TO 40 CFR PART 60 SUBPARTS AAA AND QQQQ

2015 STANDARDS OF PERFORMANCE FOR NEW RESIDENTIAL WOOD HEATERS, NEW RESIDENTIAL HYDRONIC HEATERS AND FORCED-AIR FURNACES

Remarks:

The Green Mountain 40 8640 was originally certified on EPA letter 210-19.

EPA-APPROVED TEST LABORATORY

Name of Test Laboratory:
Polytests Services inc.

Name of Person Authorized or Responsible for Conducting Compliance Test: Danick Power

Position/Title: VP operation

Address: 695-B Gaudette,

City: St-Jean-sur-Richelieu	**State: Quebec, Canada**	**ZIP Code: J3B 7S7**
Phone: 450 741-3636	**Email: dpower@polytests.com**	**Website: www.polytests.com**

Remarks:

EPA-Approved Third Party Certifier

Name of Certifier Entity: PFS TECO

Name of Person Authorized or Responsible for Reviewing Test Report and/or Issuing Certification of Conformity: John Steinert

Position/Title: President

Address: 11785 Highway 212. Ste. 305

City: Clackasmas	**State: OR**	**ZIP Code: 97015**
Phone: 503.650.0088	**Email: john.steinert@pfsteco.com**	**Website: www.PFSTECO.com**

Remarks:

COMPLIANCE STATEMENTS AND ACKNOWLEDGEMENTS – SECTIONS 60.533(B) AND 60.5475(B)

INSTRUCTIONS: PLEASE READ THE BELOW STATEMENTS AND AFFIRMATIONS AND ADDRESS ACCORDINGLY.

FOR EMISSIONS DATA SUMMARY TABLES SEE ATTACHMENTS

1. Engineering Drawings Statement

Engineering drawings and specifications of components that may affect emissions (including specifications for each component listed in paragraphs (k)(2), (3) and (4) of 60.533(b) and 60.5475(b). Manufacturers may use assembly or design drawings that have been prepared for other purposes, but must designate on the drawings the dimensions of each component listed in paragraph (k) of this section. Manufacturers must identify tolerances of components listed in paragraph (k)(2) of 60.533(b) and 60.5475(b) that are different from those specified in that paragraph, and show that such tolerances cannot reasonably be anticipated to cause wood heaters in the model line to exceed the applicable emission limits. The drawings must identify how the emission-critical parts, such as air tubes and catalyst, can be readily inspected and replaced.

[SB] Engineering drawings and specifications of components that may affect emissions (including specifications for each component listed in paragraphs (k)(2), (3) and (4) of 60.533(b) and 60.5475(b) have been provided as CBI information along with the report. All K list component drawings contain full measurements and dimensions as required. All tolerances of components identified in paragraph (k)(2) of 60.533(b) and 60.5475(b) are in compliance with the allowable tolerances as specified per the CFR. The drawings and/or manual identify which components can be replaced by the owner, and which should be inspected/replaced by a qualified representative.

2. Firebox Statement Requirement

A statement whether the firebox or any firebox component (including the materials listed in paragraph (k)(3) of 60.533(b) and 60.5475(b) will be composed of material different from the material used for the firebox or firebox component in the wood heater on which certification testing was performed, a description of any such differences and demonstration that any such differences may not reasonably be anticipated to adversely affect emissions or efficiency.

[SB] The firebox is not composed of material different from the material used for the firebox or firebox component in the wood heater on which certification testing was performed.

3. CBI

Clear identification of any claimed confidential business information (CBI). Submit such information under separate cover to the EPA CBI Office; Attn: Residential Wood Heater Compliance Program Lead, 1200 Pennsylvania Ave., NW, Room 7138, MS:2227A, Washington, DC 20460. **Note that all emissions data, including all information necessary to determine emission rates in the format of the standard, cannot be claimed as CBI.**

[SB] All confidential business information (CBI) has been clearly labeled. Both CBI and Non-CBI reports have been provided electronically.

4. Valid Certification Statement

All documentation pertaining to a valid certification test, including the complete test report and, for all test runs: Raw data sheets, laboratory technician notes, calculations and test results. Documentation must include the items specified in the applicable test methods. Documentation must include discussion of each test run and its appropriateness and validity, and must include detailed discussion of all anomalies, whether all burn rate categories were achieved, any data not used in the calculations and, for any test runs not completed, the data collected during the test run and the reason(s) that the test run was not completed and why. The burn rate for the low burn rate category must be no greater than the rate that an operator can achieve in home use and no greater than is advertised by the manufacturer or retailer. The test report must include a summary table that clearly presents the individual and overall emission rates, efficiencies and heat outputs. Submit the test report and all associated required information, according to the procedures for electronic reporting specified in § 60.537(f) and 60.5475(f).

[SB] The test report submitted contains the information required for report submittal per the CFR. This includes a summary table that clearly presents the individual and overall emission rates, efficiencies and heat outputs.

5. Warranties

A copy of the warranties for the model line, which must include a statement that the warranties are void if the unit is used to burn materials for which the unit is not certified by the EPA and void if not operated according to the owner's manual.

[SB] A copy of the warranties for the model line has been provided in the manual and includes a statement that the warranties are void if the unit is used to burn materials for which the unit is not certified by the EPA and void if not operated according to the owner's manual.

6. Q/A Statement

A statement that the manufacturer will conduct a quality assurance program for the model line that satisfies the requirements of paragraph (m) of this section.

[SB] Hearthstone will conduct a quality assurance program for the model line that satisfies the requirements of paragraph (m) of the CFR.

7. Laboratory Sealing of Unit

A statement describing how the tested unit was sealed by the laboratory after the completion of certification testing and asserting that such unit will be stored by the manufacturer in the sealed state until 5 years after the certification test.

[SB] The tested unit was sealed by the laboratory after completion of the test series and will be stored at Hearthstone's facility for a minimum of 5 years from the completion of the certification test.

8. Statements that the wood heaters manufactured under this certificate will be—

(i) Similar in all material respects that would affect emissions as defined in § 60.531 to the wood heater submitted for certification testing, and labeled as prescribed in § 60.536 and 60.5478.

(ii) Accompanied by an owner's manual that meets the requirements in § 60.536 and 60.5478. In addition, a copy of the owner's manual must be submitted to the Administrator and be available to the public on the manufacturer's web site.

[SB] The unit tested is similar in all material respects that would affect emissions as defined in § 60.531 to the wood heater submitted for certification testing, and labeled as prescribed in § 60.536 and 60.5478.

[SB] An owner's manual has been provided that meets the requirements in § 60.536 and 60.5478. In addition, a copy of the owner's manual will be submitted to the Administrator and be available to the public on the manufacturer's web site.

9. Third Party Certification Statement

A statement that the manufacturer has entered into contracts with an approved laboratory and an approved third-party certifier that satisfy the requirements of paragraph (f) of this section.

[SB] Hearthstone has entered into contracts with an approved laboratory and an approved third-party certifier that satisfy the requirements of paragraph (f) of the CFR.

10. Approved laboratory/third party Statement

A statement that the approved laboratory and approved third-party certifier are allowed to submit information on behalf of the manufacturer, including any claimed to be CBI.

[SB] The test laboratory and approved third-party certifier are authorized to submit information on behalf of the manufacturer, including any claimed to be CBI.

11. Manufacturer's Website Certification Test Reports Availability Statement

A statement that the manufacturer will place a copy of the certification test report and summary on the manufacturer's web site available to the public within 30 days after the Administrator issues a certificate of compliance.

[SB] Hearthstone agrees to place a copy of the non-CBI certification test report and summary on Hearthstone's web site available to the public when the unit is available for sale.

12. Transferability Acknowledgement Statement

A statement of acknowledgment that the certificate of compliance cannot be transferred to another manufacturer or model line without written approval by the Administrator.

[SB] We acknowledge that the certificate of compliance cannot be transferred to another manufacturer or model line without written approval by the Administrator.

13. Statement about Selling Wood Heaters without an EPA Certificate

A statement acknowledging that it is unlawful to sell, distribute or offer to sell or distribute an affected wood heater without a valid certificate of compliance.

[SB] We acknowledge that it is unlawful to sell, distribute or offer to sell or distribute an affected wood heater without a valid certificate of compliance.

Print Name and Title: SIMON BOOTH, ENGINEERING MANAGER	**Date: 11/7/23**

Signature of responsible representative of the manufacturer certifying the accuracy of the above statements:

The authorized or responsible party whose signature is above is certifying that the manufacturer has complied with and will continue to comply with all requirements of the 2015 NSPS for compliance certification and that the manufacturer remains responsible for compliance regardless of any error by the test laboratory or third-party certifier.

Attachments

Instructions: Please complete the section applicable to your certification request. You may substitute your own data tables in lieu of the ones shown below provided that all the information is captured.

WOOD BURNING HEATERS

I. Test Method 28R for Certification and Auditing of Wood Heaters

A. SUMMARY RESULTS – ADJUSTABLE WOOD BURNING HEATERS

Test No.	Burn Rate (Kg/hr)	(E) Ave. Emission Rate g/hr	(OHE) %	Heat Output (BTU/HR)	CSA B415.1 CO emission g/min
1	1,029	0,45	0,808	15 640	0,486
2	1,773	1,67	0,765	25 443	0,143
3	2,269	2,78	0,736	31 581	1,00
4	1,167	0,61	0,809	17 805	0,272
6	0,920	0,69	0,802	13 876	0,6778
Weighted particulate emission average of 4 test runs: 1.07 grams per hour.					
Weighted average HHV efficiency of 4 test runs: 79.0%.					
Average Co 0.52 gr/min					